VOL. 10, NO 20, NOVEMBER, 2015 ISSN 1819-6608
ARPN Journal of Engineering and Applied Sciences

www.arpnjournals.com

AMALGAMATION OF CONTINUOUS TIME FILTERS BY SIMULATED INDUCTOR

D. Susan and S. Jayalalitha
School of Electrical and Electronics, SASTRA University, Thanjavur, Tamilnadu, India
E-Mail: d_susan@ece.sastra.edu

ABSTRACT

In the electronics world a good number of the circuits use inductor. But, its implementation at near to the ground frequencies is narrowed due to enormous number of turns required to wound on the coil. This also in turn takes up vast space and makes fabrication difficult. It is not attuned with the most recent Integrated Circuit fabrication technology. Normally the inductors have some loses and its effect is reflected in terms of poor quality factor. Here in this paper a new way of implementing the inductor is discussed. It uses the negative R concept to cancel the positive R to realize an inductor with no loss. Few applications are shown and the response highly coincides with the theory.

Keywords: inductor, negative resistance, filters, quality factors, transfers function.

1. INTRODUCTION

Most of the Inductors used in many applications are lossy. These inductors are in one way or the other invariably used in all electronic circuits. But some constraints are there in using the inductor which must be taken care. Few of them summed up by UMESH KUMAR and SUSHIL KUMAR SHUKLA [1, 9] are documented below.

- The core formed by the magnetic material and the windings formed by the conductors is placed on the semi-conducting material surface which does not reveal the ferromagnetism. This leads to low value of inductance and reduced quality factor Q in the inductor.
- Lessening the size of inductor minimizes the quality factor
- The finest value of Q in inductor is around 1000. This is because the inductors have losses. But capacitors can be realized with values ranging from 5, 000 to 10, 000.
- At low frequencies, inductors are seldom used because the inductors are unwieldy.

Many schemes are pointed out in the literature to have an alternating circuit to simulate the inductor like Riordans's circuit and Antoniou's circuit etc. [1, 2, and 10]. This paper presents a new method of designing the inductor simulator circuit which is ideal in nature. Such simulated inductor used in analog circuits namely the filters is also presented. For the complete frequency range of application, the performance of the inductor simulated, is identical to that of the real inductor, experimentally.

a) Basic circuit to simulate lossy L

The circuit shown in Figure-1 is a form of integrator which is equivalent to an inductor in parallel with a resistor. The simulated L is a lossy inductor. This can be made ideal by adding a negative resistance of suitable value in parallel or in series with the circuit [3, 8].

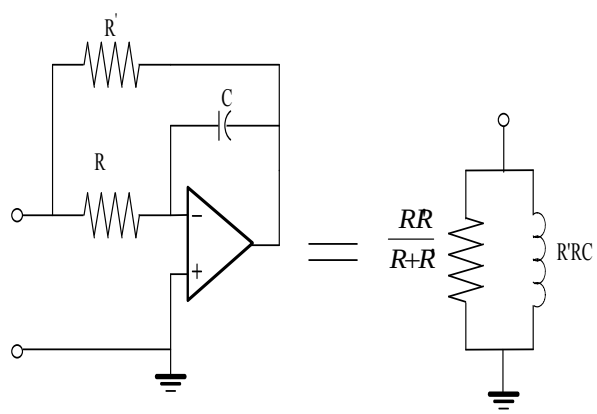

Figure-1. Basic lossy inductor circuit.

b) Concept of negative resistance

The negative resistance is obtained by making use of one op-amp and three resistors as shown in Figure-2 The op-amps are believed to be ideal, with the assumption that no current are drawn by both the inverting and non-inverting terminal of the op-amp and the differential input voltage across the terminal is zero [4]. By applying the basic KVL and KCL for the circuit given in Figure-2 the following equations are obtained from which the negative resistance is obtained.

$$I = \frac{V - V'}{R_3} \quad (1)$$

$$\frac{V' - V}{R_4} = \frac{V}{R_5} \quad (2)$$

On solving (1) and (2), the impedance of the circuit is obtained as

$$Z = \frac{V}{I} = \frac{-R_5 R_3}{R_4} \quad (3)$$

which is the negative resistance.

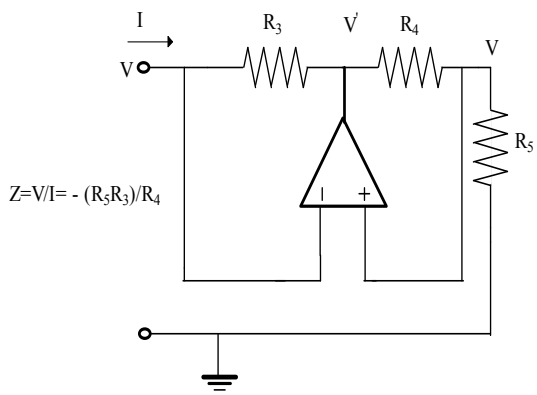

Figure-2. Negative resistance circuit.

c) Simulation of ideal L using negative resistance

The circuit used for realizing the ideal inductor make use of a combination of op-amps which is highly versatile [13], a resistors and capacitor as per the connections given in Figure-3. With out the first op-amp, the impedance offered by the circuit is a non-ideal inductor with a resistor in parallel with the ideal inductor

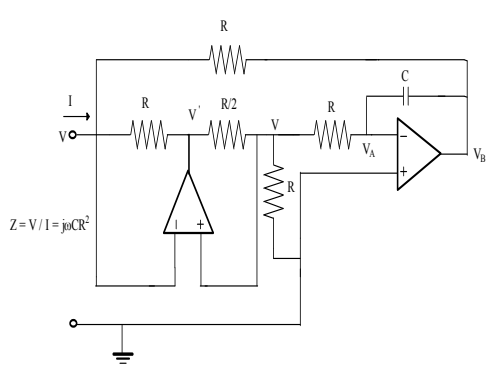

Figure-3. Proposed simulated inductor circuit.

The first op-amp produces a negative resistance and thus cancels the positive resistance offered by the second op-amp leaving only the ideal inductor as the impedance [5].

By properly selecting the values of resistors and capacitors, the values of the inductance will be in the range of henries which is impossible with the passive component L. So, the proposed inductor realized is used for providing such high value of L and it replaces the grounded L and not floating L.

The mathematical derivation of ideal L using negative resistance obtained from Figure-3 is given below.

$$I = \frac{V - V'}{R} + \frac{V - V_B}{R} \quad (4)$$

$$\frac{V' - V}{\frac{R}{2}} = \frac{V}{R} + \frac{V - V_A}{R} \quad (5)$$

$$\frac{V - V_A}{R} = \frac{V_A - V_B}{\frac{1}{j\omega C}} \quad (6)$$

On solving (4), (5) and (6) the impedance obtained is

$$Z = \frac{V}{I} = j\omega CR^2 = j\omega L \quad (7)$$

Hence the impedance provided by the circuit as given in (7) is an ideal L

2. APPLICATIONS OF THE NEWLY PROPOSED SIMULATED L

The proposed method of simulated L can be used in all analog circuits for different applications particularly at low frequencies where L is grounded. One such application is the implementation of Butterworth filters. These filters are basically obtained from the resonator circuit which employs L, C and R [6]. The simulated inductor for realizing the other filters namely high pass filter, band pass filter and notch filter is presented. The inductor used in these filters is grounded. Filters can also be implemented using CFOA for high frequency, transistors, switched capacitor etc. [11].

a) Synthesis of high pass filter

Figure-4 is a filter circuit which passes high frequencies and is designed for the cut off frequency of

160 Hz. The requirement of L for this frequency is in the order of Hendry.

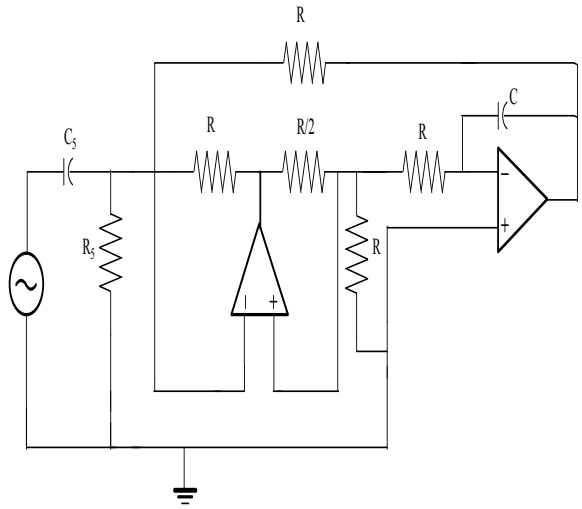

Figure-4. Circuit of High pass filter using the proposed simulated L.

Hence the proposed simulated L is used. The designed values of the filter are given in the Appendix. The filter transfer function is given by

$$T(s) = \frac{s^2}{s^2 + s(1/CR) + 1/LC} \tag{8}$$

The response of the filter with respect to frequency change is shown in Figure-5.

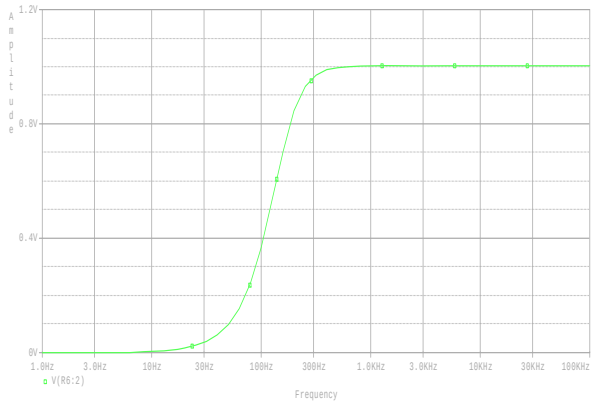

Figure-5. Frequency response of high passes filter circuit.

b) Synthesis of band pass filter

The band pass filter designed for a centre frequency of 160 Hz using the simulated L is given in Figure-6. The values of the circuit parameters for the band pass filter are given in the Appendix.

$$T(s) = \frac{s(1/CR)}{s^2 + s(1/CR) + 1/LC} \tag{9}$$

Equation (9) gives the transfer function of band pass filter. Since band pass filter eliminates noise it can be used in Bio medical application [12]. Figure-7 gives the frequency response of the band pass filter.

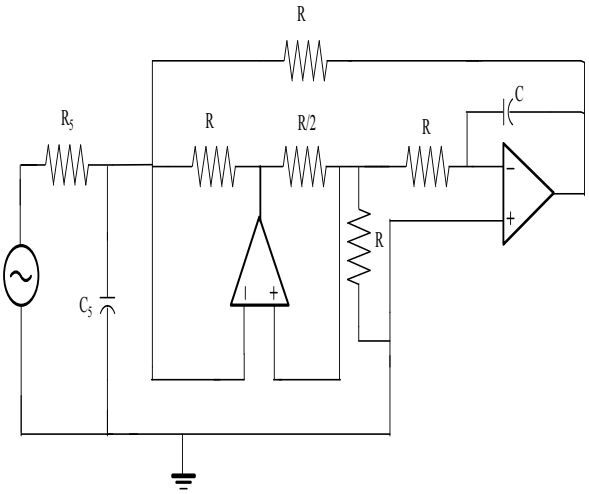

Figure-6. Circuit of Band pass filter using the proposed simulated L.

Figure-7. Frequency response of band passes filter circuit.

c) Synthesis of notch filter

The filter that can notch out a particular frequency cannot be obtained directly. Hence the concept of subtracting the band pass filter from the original input

signal is used [7]. This concept is shown as schematic diagram in Figure-8. The notch filter is designed to have a notch frequency of 160 Hz whose transfer function is given in the equation (9) and the designed values are given in Appendix. The notch filter response is provided in Figure-9 which also shows the input signal (straight line) as well the band pass response (bell shape).

$$T(s) = K\left(\frac{1/LC + s^2}{s^2 + s(1/CR) + 1/LC}\right) \quad (10)$$

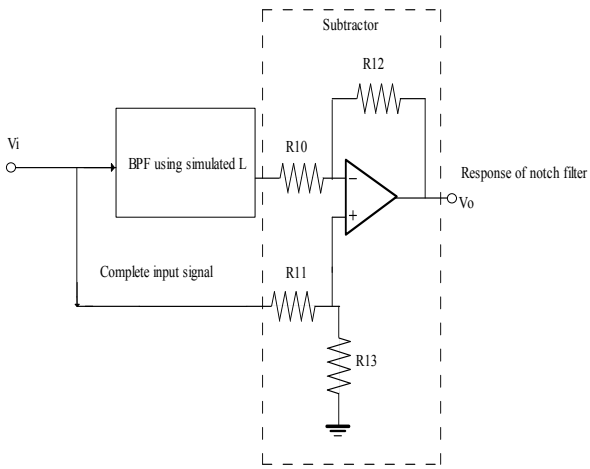

Figure-8. Notch filter circuit obtained using band pass filter.

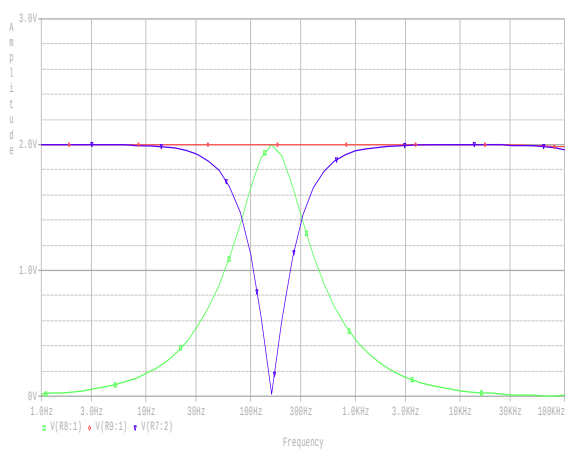

Figure-9. Notch filter frequency response.

The proposed simulated L cannot be used for certain filters like the low pass filter, all pass filter etc in which the inductor is floating.

3. CONCLUSIONS

The use of L at low frequency is limited and the various limitations are mentioned in the paper. A new method of obtaining an ideal L using the concept of negative resistance is presented; such inductor is used in analog circuits like filters. For few filters namely the high pass, band pass and notch the simulated circuit is presented along with frequency response curve.

Appendix

Circuit design

For all filters: High, band pass and notch:
f_o=160 Hz, L= 9.9H≈10H, C_5=0.1µF, R_5= 7.036KΩ
For simulated L: R= 10 KΩ, C= 0.1µF

REFERENCES

[1] Umesh Kumar and Sushil Kumar Shukla. 1989. Analytical study of inductor simulation circuit. Active and Passive Elec. comp. 13: 211-227.

[2] L.T. Bruton. 1978. Multiple-Amplifier RC - active filter design with emphasis on GIC Realization. IEEE transactions on circuits and systems. 25(10).

[3] H. J. Orchard and D. F. Sheahan. 1970. Induotorless band-pass filters. IEEE J. Solid-State Circuits. 5: 108-118.

[4] D. Susan and S. Jayalalitha. 2011. Bessel filters using simulated inductor. IEEE International Conference on recent advancement in Electrical, Electronics and Control Engineering. 268-271.

[5] R.L. Ford and F.E.J. Girling. 1966. Active filters and oscillators using simulated inductance. Electonics Letters. 2(2): 52.

[6] D. Susan and S.Jayalalitha. 2010. Analog filters using Simulated Inductors. IEEE second International Conference on Mechanical and Electrical Technology (ICMET 2010) Singapore. 659-662.

[7] D. Susan and S. Jayalalitha. 2011. Notch filters using simulated inductor. International Journal of Engineering Science and Technology. 3(6): 5126-5131.

[8] S. Jayalalitha and D. Susan. 2013. Grounded simulated inductor -A review. Middle-East Journal of Scientific Research.15 (2):278-286.

[9] D. Susan and S. Jayalalitha. 2012. Frequency dependent negative resistance-A review. Research Journal of Applied Sciences. Engineering and Technology. 4(17): 2988-2994.

[10] D. Susan and S. Jayalalitha. 2013. Low Frequency Active Tuned Oscillator using Simulated Inductor. Research Journal of Applied Sciences. Engineering and Technology. 6(7): 1171-1177.

[11] Panagiotis Samiotis and Costas Psychalinos. Low-Voltage Complex Filters Using Current Feedback Operational Amplifier. ISRN Electronics. 13: 1-7.

[12] A. Soto Otalora, L. A. Guzman Trujilloy and A. Diaz Diaz. 2015. Pulse Oximetry Module to implement in team monitor of vital signs. ARPN Journal of Engineering and Applied Sciences .10(4): 1631-1636.

[13] Abhishek Pandey, Subhra Chakraborty and Vijay Nath. 2015. Slew rate enhancing technique in Darlington pair based CMOS op-amp. ARPN Journal of Engineering and Applied Sciences. 10(9): 3970-3973.