VOL. 10, NO. 21, NOVEMBER 2015 ISSN 1819-6608
ARPN Journal of Engineering and Applied Sciences

www.arpnjournals.com

MODELING AND SIMULATION OF UPFC FOR DYNAMIC VOLTAGE CONTROL IN POWER SYSTEM USING PSCAD/EMTDC SOFTWARE

S. N. Fadilah, N. Md. Saad, M. F. Abas and N. L. Ramli
Faculty of Electrical and Electronics Engineering, Universiti Malaysia Pahang, Pekan, Pahang, Malaysia
E-Mail: norhafidzah@ump.edu.my

ABSTRACT

This paper discussed the effect of Unified Power Flow Controller (UPFC) controllers for enhancement of power system voltage regulation and power flows in the transmission system. The model of UPFC are studied and validated in power system computer aided design & electromagnetic transient direct current (PSCAD/EMTDC) environment. The basic operations are explained, as well as the control strategies and circuit configurations of the controller. PI controller is used for control scheme. In this proposed work, the 4 bus test system is used to verify the proposed model. The steady-state analysis is done to show the capability of the controller in improving voltage regulation in the transmission system.

Keywords: unified power flow controller, proportional integral, PSCAD/EMTDC.

INTRODUCTION

Nowadays, the power system becomes more complicated to operate with huge power flows. In transmission system, the power transmitted need to follow several basic requirements. The power transmission should be low risk of power system failure, economical and high power transfer capability, with no reduction of system stability.

There are several controllers that are used for controlling the power system stability. A second generation FACTS device is the Unified Power Flow Controller (UPFC) which enables independent control of the power flow and improving the voltage regulation in transmission line [1]. UPFC is combination of two FACTs device which are STATCOM (Static Synchronous Compensator) and SSSC (Static Series Synchronous Compensator) [2]. UPFC controller used in control the real and reactive power flow in the transmission system. A unified power flow controller (UPFC) performs this through the control of the in-phase voltage, quadrature voltage, and shunt compensation. It can control the three control parameters either individually or in convenient combinations with its series-connected output while maintaining reactive power support with its shunt-connected input [3].

The operating principle of UPFC is combination of the STATCOM and the SSSC into a single device with a common control system [4]. UPFC consists of a shunt transformer and a series transformer, power electronic switching devices and a DC link. It is independently control real and reactive power by injects UPFC device through the series transformer. Figure-1 shows the basic circuit configuration of UPFC. The schematic diagram of UPFC is depicted in Figure-2.

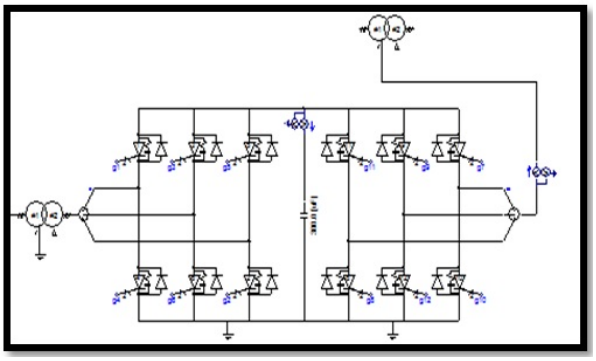

Figure-1. Single line diagram of UPFC model [4].

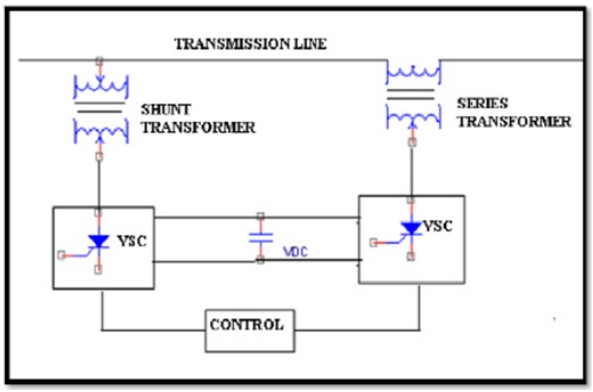

Figure-2. Schematic diagram of the UPFC [6].

METHODOLOGY

This paper is about to study the effect of Unified Power Flow Controller (UPFC) controllers for enhancement of power system voltage regulation and power flows in the transmission system. The proposed technique is developed using PSCAD/EMTDC software to model and verify the UPFC system. The active power and

reactive power performance will be improved through injecting the UPFC device. The model of UPFC controller is tested in 4 bus power system network to verify the effectiveness of UPFC's application in power system. To verify the simulation in PSCAD/EMTDC environment, the steady-state analysis of the test system is acquired using MATLAB software.

Model of UPFC

A proportional-integral (PI) controller was applied to regulate the AC voltage or alternatively, power flow absorbed or generated by the UPFC controller. The output of PI controller is the angle order; it represents the required shift between system voltage and voltage generated by UPFC controller. The shift determines the direction and amount of real power flow. The values parameters of PI controller in PSCAD simulation are not optimal and need to find better ones to ensure the voltage of the system are improved. The voltage control loop is shown in Figure-3. The voltage error is measured by comparing the reference voltage and filter voltage of system. The PI controller used the voltage error in order to generate the angle order.

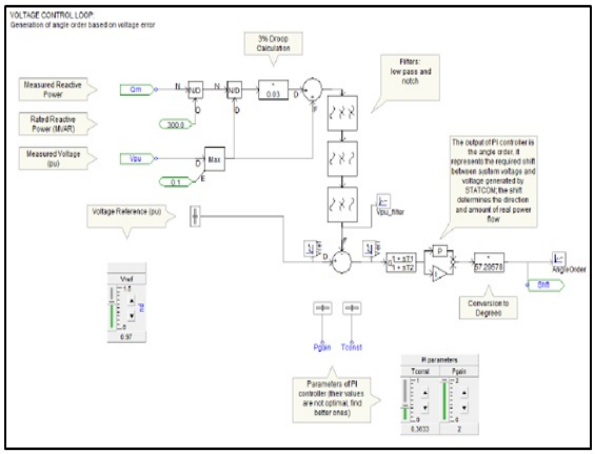

Figure-3. Voltage control loop.

The single line diagram of UPFC which has been modelled in PSCAD/EMTDC environment is depicted in Figure-4. The main circuit of the series device is Static Series Synchronous Compensator (SSSC). It consists of a three phase PWM inverter. The ac terminals are connected in series to transmission line through three phase transformers. The ac terminals of the shunt device, Static Synchronous Compensator (STATCOM) are connected in parallel with transmission line.

The UPFC controller consists of two voltage sourced converters which using gate turn-off (GTO) thyristor valves. The basic structure of the UPFC consists of two voltage source converter (VSC) which is one converter is connected in parallel to the transmission line and the other one is connected in series with the transmission line. It uses a pair of three-phase controllable bridges to produce current that is injected into a transmission line using a series transformer [6].

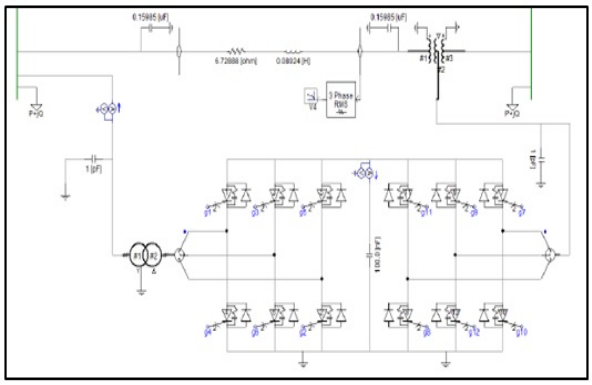

Figure-4. The single line diagram of UPFC model in PSCAD/EMTDC environment.

Test bus system simulation

The 4 bus test system has been used in order to obtain the effect of UPFC in the transmission system. The bus data is generated by using MATLAB software and PSCAD software. The steady state analysis of 4-bus test system is conducted by using MATPOWER load flow analysis in MATLAB environment. The simulation of 4 bus test system is verified by comparing the data obtained in MATLAB and PSCAD/EMTDC environment. The reasons that bus data was generated by using power flow analysis are to obtain the data needed such as power flows at each lines, voltage and angle as a reference to verify the simulation of the 4 bus test system in PSCAD/EMTDC.

The 4 bus power system network consists of 4 buses with 2 generators located at bus 1 and bus 4 as shown in Figure-5. The system is operated at 60Hz at 230 kV which consists of four loads each at bus 1, 2, 3 and 4. The bus data and line data are given in Table-1 and Table 2. The base values for the transmission system are 100 MVA, 230kV. Bus 1 is slack bus, bus 2 & 3 are the P-Q buses and bus 4 is P-V bus respectively. The Q values of load tabulated in Table-1 are calculated from the corresponding P values by assuming a lagging power factor of 0.85 [8].

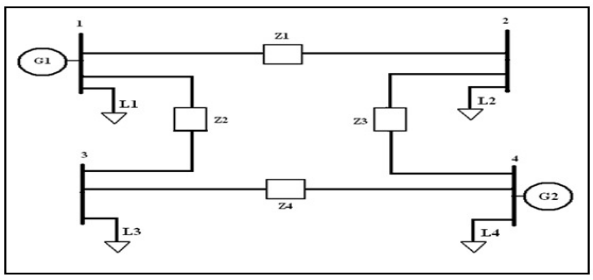

Figure-5. The 4 bus test system without UPFC.

VOL. 10, NO. 21, NOVEMBER 2015 ISSN 1819-6608
ARPN Journal of Engineering and Applied Sciences

www.arpnjournals.com

Table-1. Bus data for 4 bus test system.

Bus	P_g (MW)	Q_g (MVar)	P_L (MW)	Q_L (MVar)	Bus voltage (pu)
1	-	-	50	30.99	1
2	0	0	170	105.35	1
3	0	0	200	123.94	1
4	318	-	80	49.58	1.02

Table-2. Line data for 4 bus test system.

BUS		Per Unit Value (p.u)			
From	To	R	X	G	B
1	2	0.01008	0.0504	3.815629	0.1025
1	3	0.00744	0.0372	3.169561	0.0775
2	4	0.00744	0.0372	5.169561	0.0775
3	4	0.01272	0.0636	3.023705	0.1275

The power flow analysis is carried out by using Newton-Raphson method. The method is used because this method is more efficient and practical in solving the load flow analysis problem for a big system [7]. In order to construct the 4 bus test system in the PSCAD/EMTDC software, the actual values of the impedance in each transmission line are needed. So, this will require the conversion of the per-unit values to the actual values based on the given based voltage. After the steady-stated analysis of the test system is succeed, the UPFC can be applied at the critical location of the power system for dynamic voltage control.

RESULTS AND DISCUSSION

Control of UPFC

A proportional-integral (PI) controller was applied to regulate the AC voltage and control the power flow absorbed or generated by the UPFC controller. The above voltage and power flow control has been used widely in UPFC models It has been recognized that besides the power flow control, UPFC has the ability to control angle, voltage and impedance or a combination of those [9]-[11]. However, this paper will focused in the modeling of these controls for dynamic voltage control in transmission power system.

In order to control the system, the STATCOM and SSSC filter voltage and voltage error were observed. The results can be seen in Figure-6 to Figure-9. The rise time of Statcom filter voltage is 0.2 second and the steady state are achieved at 4 second with voltage 0.96975 p.u. The statcom voltage error was ensure less than 1 p.u and the value close to 0 p.u is more accurate. The voltage error for STATCOM controller is 0.00025 p.u. The values parameters of PI controller in PSCAD simulation are 2 for Pgain ad 0.3633 for Tconstant.

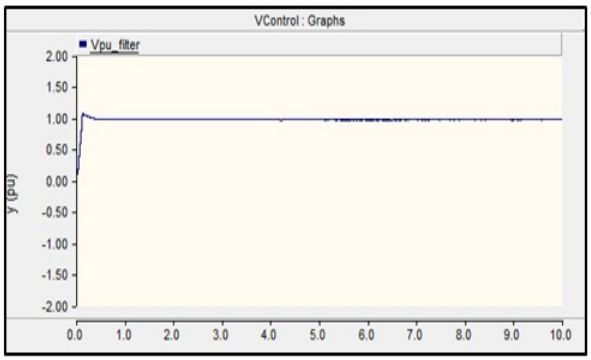

Figure-6. STATCOM filter voltage.

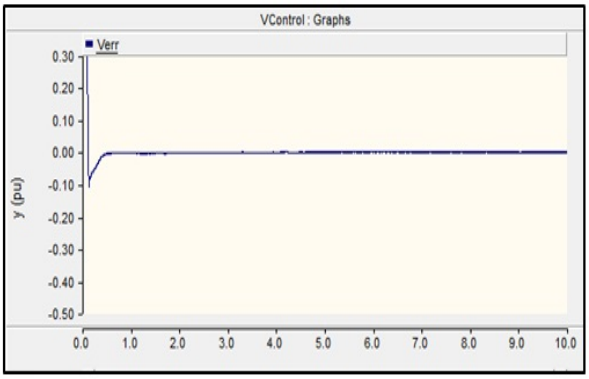

Figure-7. STATCOM voltage error.

The rise time of SSSC filter voltage is 0.2 second and the steady state are achieved at 4 second with voltage 0.969675 p.u. The SSSC voltage error was ensure less than 1 p.u and the value close to 0 p.u is more accurate. The voltage error for SSSC controller is 0.0000325 p.u. The values parameters of PI controller in PSCAD simulation are 2 for Pgain and 0.03 for Tconstant.

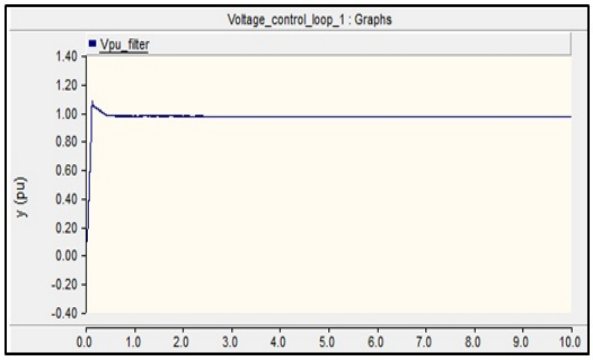

Figure-8. SSSC filter voltage.

VOL. 10, NO. 21, NOVEMBER 2015 ISSN 1819-6608
ARPN Journal of Engineering and Applied Sciences

www.arpnjournals.com

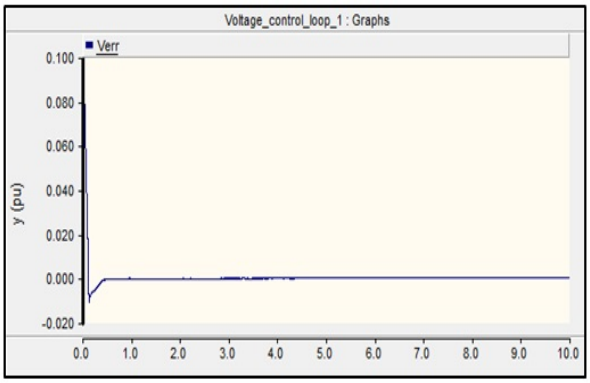

Figure-9. SSSC voltage error.

The power flow analysis in 4 bus test system

The power flow analysis of 4 bus test system in Figure-5 is simulated in PSCAD/EMTDC. The single line diagram of the test system without UPFC controller is shown in Figure-10.

The results of power flow for steady-state analysis in PSCAD/EMTDC are compared with results obtained in MATLAB environment for verification.

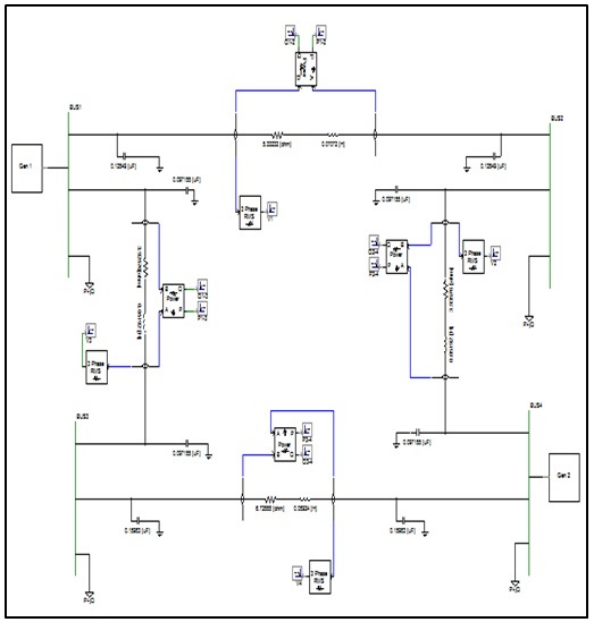

Figure-10. 4 bus test systems in PSCAD software.

The model of 4 bus power system in PSCAD software is used the actual value for all the parameter such as line impedance, line capacitance and load of the system. The data was observed after 10 seconds runtimes. Then, the result of voltage magnitude and power flow is compared with the data obtained in MATLAB software. The results of voltage profile can be seen in Table-3. The values from both software results are almost same and the steady-state simulation of PSCAD software is proved.

Table-3. Voltage profile of the test system.

BUS	Voltage Magnitude (p.u) (MATLAB)	Voltage Magnitude (p.u) (PSCAD without UPFC)
1	1.000	0.999394
2	0.982	0.980835
3	0.969	0.967273
4	1.020	1.019400

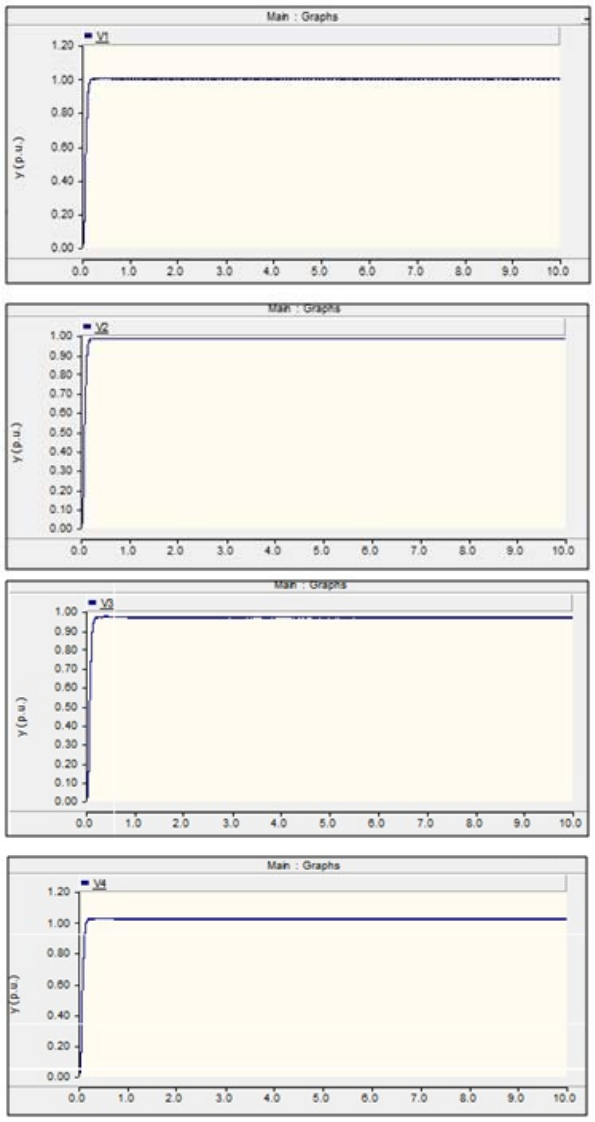

Figure-11. Voltage magnitude of 4 bus network system.

VOL. 10, NO. 21, NOVEMBER 2015 ISSN 1819-6608
ARPN Journal of Engineering and Applied Sciences

www.arpnjournals.com

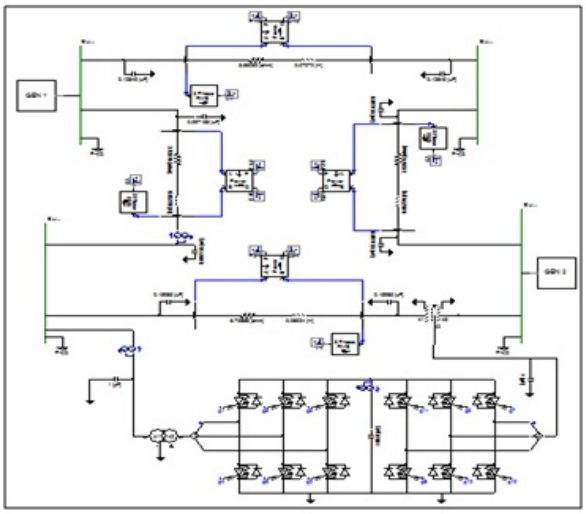

Figure-12. The 4 bus test system with UPFC controller in PSCAD/EMTDC environment.

Table-4. Voltage magnitude of 4 bus power system after implementing UPFC at bus 3.

BUS	Voltage Magnitude (p.u) (MATLAB)	Voltage Magnitude (p.u) (PSCAD without UPFC)	Voltage Magnitude (p.u) (PSCAD with UPFC)
1	1.000	0.999394	1.00225
2	0.982	0.980835	0.990571
3	0.969	0.967273	0.991277
4	1.020	1.019400	1.033680

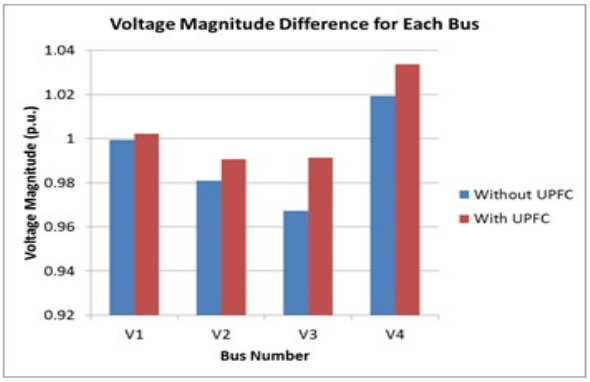

Figure-13. Graph of bus voltages.

Based on the graph, the value of voltage at bus 3 are improve due the value are increase after the UPFC controller was implemented. Other voltage magnitude are also increase but still in the range of voltage magnitude. The voltage magnitude of bus 3 is increased which is from 0.969 p.u to 0.991277 p.u. Based on the observation on the power flow, the real power seems there are many changes but the reactive power is changes extensively. Moreover, the reactive power is actually increased at the affected line where the UPFC was installed. The UPFC is operates in capacitive mode because the reactive power flows from the converter to the system.

Figure-14 shows the graphs of voltage profiles that obtained from the PSCAD/EMTDC simulation after installation of UPFC controller. It shows that the voltage magnitude at bus 3 has been regulated near to 1pu which is 0.991277pu. Besides that the voltage magnitude at bus 1, 2 and 4 also increase to 1.00225, 0.990571 and 1.03368 p. u respectively.

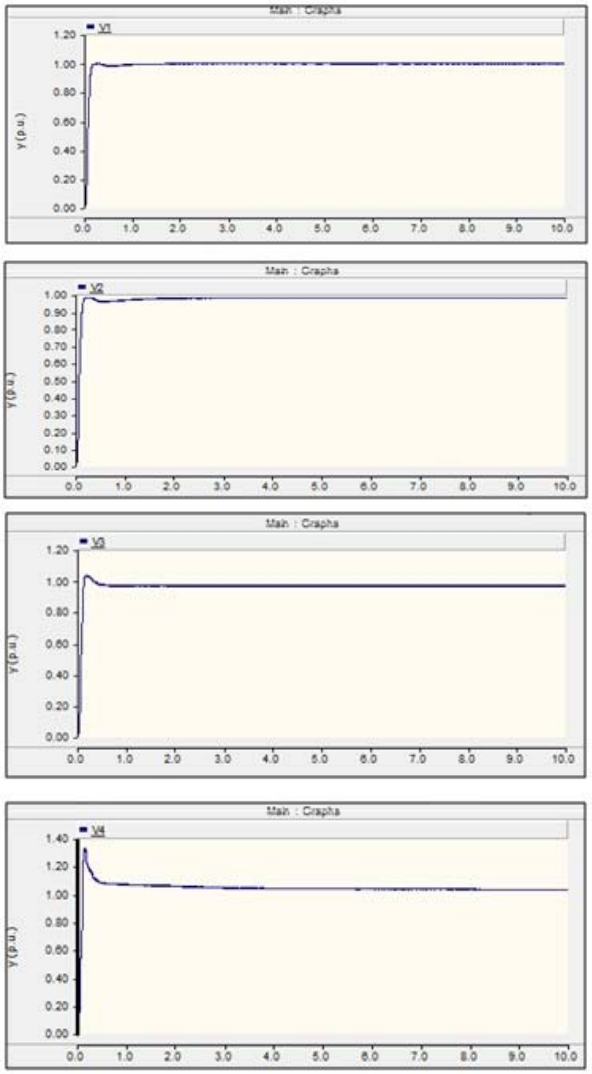

Figure-14. Voltage at each bus of 4 bus system with UPFC.

CONCLUSIONS

As a conclusion, the UPFC controllers and its design are discussed in order to regulate the voltage magnitude for dynamic voltage control of power system. The UPFC has successfully been modelled and tested in 4 bus power system network using PSCAD software and verify with MATLAB MATPOWER's power flow analysis under steady-state condition. The UPFC is used to regulate the voltage magnitude by generating or absorbing the reactive power. After the UPFC was implemented in the test bus system, it is shown that the UPFC can enhance the voltage stability in the power system network. The voltage magnitude of the test system was regulated into the safe zone, and it shows that the UPFC can enhance the voltage stability.14 shows the graphs of voltage profiles that obtained from the PSCAD/EMTDC simulation after installation of UPFC controller. It shows that the voltage magnitude at bus 3 has been regulated near to 1pu which is 0.991277pu. Besides that the voltage magnitude at bus 1, 2 and 4 also increase to 1.00225, 0.990571 and 1.03368 p. u respectively.

REFERENCES

[1] Pramod Kumar Gouda, Ashwin K. Sahoo and P. K. Hota. 2012. Modelling and simulation of UPFC using PSCAD/EMTDC. International Journal of Physical Sciences, Vol. 7, No. 45, pp. 5965-5980.

[2] N. G. Hingorani and L. Gyugyi. 2000. Understanding FACTS: Concepts and Technology of Flexible AC Transmission Systems. IEEE Press, ISBN 0-7803-3455-8.

[3] L. Gyugyi, C. D. Schauder, S. L. Williams, T. R. Rietman, D.R. Torgerson, and A. Edris. 1995. The unified power flow controller: a new approach to power transmission control. IEEE Trans. On Power Delivery, Vol. 10, No. 2, pp. 1085-1097.

[4] Djilani Kobibi Y.I, Hadjeri Samir, Djehaf Mohamed. 2014. Modelling a UPFC for the Study of Power System Steady state and Transient Characteristics. International Journal of Advanced Engineering and Science, Vol. 3, No.1, ISSN 2304-7712, pp. 124-133

[5] Yong-Hua Song and Allan Johns. 1999. Flexible ac transmission systems (FACTS). IET. pp. 268-317.

[6] D Murali and Dr M Rajaram. 2010. Active and Reactive Power Flow Control using FACTS Devices. International Journal of Computer Applications, Vol. 9, No. 8, pp. 45–50.

[7] Hadi Saadat. 2000. Power System Analysis. 2nd. Ed., New York: McGraw Hill.

[8] John J. Grainger, William D. Stevenson, Jr. 1994. Power System Analysis, Mc-Graw Hill.

[9] Wenjin Dai and Zhihong Liu. 2007. Study on Modeling of Unified Power Flow Controller. Proceedings of the IEEE International Conference on Automation and Logistics, Jinan, China.

[10] Nabavi-Niaki A. and Iravani MR. 1996. Steady-state and dynamic models of unified power flow controller (UPFC) for power system studies. IEEE Trans. Power System, Vol. 11, pp.1937_1943

[11] Nelson RJ and Bian J. 1997. UPFC application on the AEP system: planning considerations. IEEE Trans Power Syst. Vol. 12, pp.1695-1701

[12] Leonard L. Grigsby. 2012. Power Systems: The electric power engineering handbook. Third Edition, Volume 4.

[13] A. Edris. 2000. FACTS technology development: An update. IEEE Power Eng. Rev., pp. 4–9.

[14] Grzegorz Benysek. 2007. Improvement in the Quality of Delivery of Electrical Energy using Power Electronics Systems. Springer. pp. 41.

[15] Yong-Hua Song, Allan Johns. 1997. Proposed terms and definitions for flexible AC transmission system(FACTS). IEEE Transactions on Power Delivery, Volume 12, Issue 4, pp. 1848–1853.

[16] Xiao-Ping Zhang, Christian Rehtanz, and Bikash Pal. 2012. Flexible AC Transmission Systems: Modelling and Control. Springer. pp. 67-92