VOL. 10, NO 22, DECEMBER, 2015 ISSN 1819-6608
ARPN Journal of Engineering and Applied Sciences

www.arpnjournals.com

BABYCARE ALERT SYSTEM FOR PREVENTION OF CHILD LEFT IN A PARKED VEHICLE

K. N. Khamil, S. I. A. Rahman and M. Gambilok
Centre for Telecommunication Research and Innovation (CeTRI), Faculty of Electronic and Computer Engineering, Universiti Teknikal Malaysia Melaka (UTeM), Hang Tuah Jaya, Durian Tunggal, Melaka, Malaysia
E-Mail: nisa@utem.edu.my

ABSTRACT

As science and technology has advancing to be part of our lives, most of everyday applications are now connected to each other virtually. By incorporating the IoT technology into child safety division, this part is worth investigating into. With hectic lifestyle, some parents have a tendency to leave their children inside the parked vehicle. The research is to design a notification or an alert to parents by using the most essential device that everyone has at least have one, smartphone. The design consists of two main parts which are safety pad and keychain alarm device. For the first part, the safety pad consists of load sensor to sense the presence of child inside the child car seat and notify parents through smartphone. For the second part, the keychain alarm devices use Radio Frequency (RF) transceiver that will act as backup safety features for children in case when the parents' smartphone is missing or run out of battery. This device will activate the warning alarm when parents walking outside the RF signal range of the safety pad. The system was successfully used the most important tech gear and indirectly adds this BabyCare safety function to the smartphone.

Keywords: arduino, vehicle, hyperthermia, sensors, IoT.

1. INTRODUCTION

Recent developments in Internet of Things (IoT) have led to a renewed interest in child safety division. Time magazine's Techland division has directed a huge, captivating worldwide survey on 5,000 people from different countries, and discovered thechance that you've been subconsciously fall after mobile phone enslavement iswhen you are not able to just leave the cell phone in their pockets. 84 percent of respondents said that they could not go a day without their mobile phones[1]. Since people in these days are increasingly connected to their personal smart device, incorporating a safety device that might safe a child's life is worth investigating into.

There are a great deal number of cases that identified with the death of kids that are left in a vehicles because of heat stroke and hyperthermia [2]. Hyperthermia is an intense conditions that happen when the body retains more heat that it can deal with [3]. Kids appear to be more inclined to have hyperthermia than grown-ups when the vehicles is stopped and window shut closed [2]. There are two elements make kids more inclined to experienced hyperthermia than grown-ups: kids have a more prominent surface range body mass proportion contrasted with grown-ups and their thermoregulation is less proficient than grown-ups [2]. Studies have demonstrated that the temperature inside a halted vehicle can rapidly rise to a hazardous level for adolescents, pets and even grown-ups [3].

Based on Figure-1, the yellow wave that transmitted directly to the window's car will heat the air in the car adjacently via conduction and convection. This circumstances will added the air caught in the vehicle to heats up rapidly [4]. Even the window is partially close cannot decrease the warming rate of the vehicle's internal air since the bodies of babies or toddlers warm at quicker rate than grown - ups [3].

Figure-1. Temperature's reading for a tight and closed vehicle in 60 minutes [4].

The implication of this study will kept from these unfortunate occurrence happens where the vehicle need to be equipped with a system that alert the parents or caretaker from leaving their kids behind in the car that can jeopardize their lives.

2. LITERATURE REVIEW

According to the statistic in the US, 10% of child's deaths are caused by heat stroke due to negligence caused by parents or caretaker. A lion's share of the cases happen when folks get diverted from their hectic lives and

VOL. 10, NO 22, DECEMBER, 2015 ISSN 1819-6608
ARPN Journal of Engineering and Applied Sciences

they don't realized that the child was in a death-defying situation. Busy folks that tend to position their child in the back of the car and could make them overlook that they are carrying their child along. They could possibly go about their routine and leave children secured in the shut window's vehicle. The impacts from work stress relatedare one of the reason why most of people tend to forgot [2]. This clarifies that individual's day by day life could influence their conduct and contribute to one's decision toleave their child unattended in the vehicle because of distressing and work load. There are numerous research work on this subject [5]-[9], in the recent years.

Table-1. Details of numbering in Figure-3.

No	Details	No	Details
110	child safety seat	124	a restraint
112	a child	134	seat belt of vehicle
114	presence sensor	150	wireless receiver
116	proximity sensor	154	proximity sensor
118	a transmitter	156	an alert
120	wireless signal such as radio frequency, micro waveor infrared wave signal	158	a speaker

In the patented design by J. Morningstar [10], the warning system will notify the parents immediately when the children were left inside the vehicle.

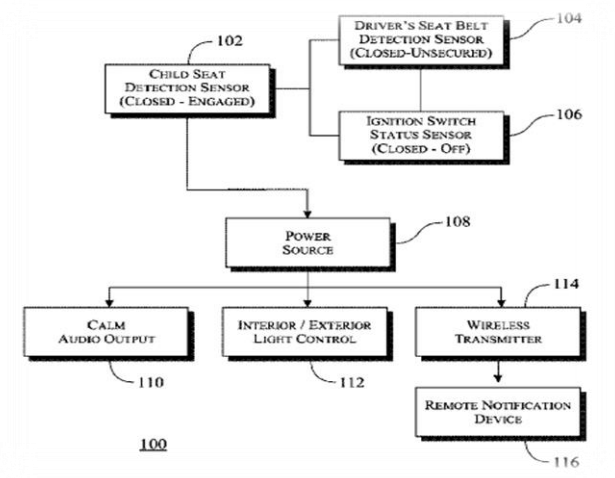

Figure-2. Block Diagram of the warning system [10].

As shown in Figure-2, after the driver releases the seat belt, the system will check the pressure pad or a secured child seat lap belt, whether the child is still remain seated in his car seat. If yes, it will notify the caregiver instantaneously. The alarm would include a calm audio output such as a lullaby, a song, or a story. The system can be integrated into the OEM features to provide an alert escalation process using a local alert, a vehicle alert, a Wireless alert and specifically a 911 alert.

For C.Owens [6], the operation for this design is using the presence sensor that check on the presence of child in the safety, while the proximity sensor will check on the range distance between wireless receiver and child's seat. If the proximity sensor sensed the distance are out of range and the child is still on the car seat, wireless signal will alert wireless receiver to produce an alarm to notify parents or driver. With a temperature control unit and thermoelectric added in the design, it detects the temperature of the child whether the temperature is safe or not. This advantage can reduce the risk of heatstroke among child.

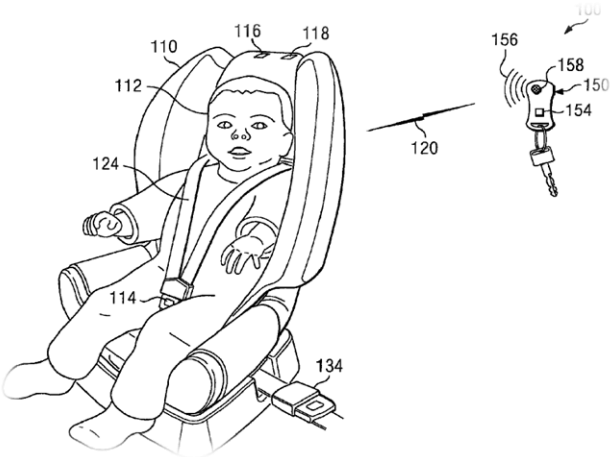

Figure-3. Layout of child safety seat system equipped with sensor and notification setting proposed by C. Owens [6].

In the paper of S. Davisson *et al* [12], the system is designed to a baby seat occupant detection that alerts the caregiver when the baby is still in their seat, the caregiver has travelled to an unacceptable distance from the vehicle and the internal temperature of the vehicle is increased to undesirable temperature range.

The baby seat occupant detection system includes a remote unit for a caregiver and a base unit fixed to a baby seat which communicates with the remote unit. As the distances are out of range, the alarm activated the remote and the base unit. The base unit and the remote unit can be programmed to identify and communicate with at least one remote unit or with multiple remote units.

Same with previous design, a temperature detector is added into the design to monitors the internal temperature of the vehicle. The alarm will activate at the

VOL. 10, NO 22, DECEMBER, 2015 ISSN 1819-6608
ARPN Journal of Engineering and Applied Sciences

www.arpnjournals.com

remote unit and base unit if the temperature at warning range. This design is portable, light weight, and can be easily moved from one vehicle to another.

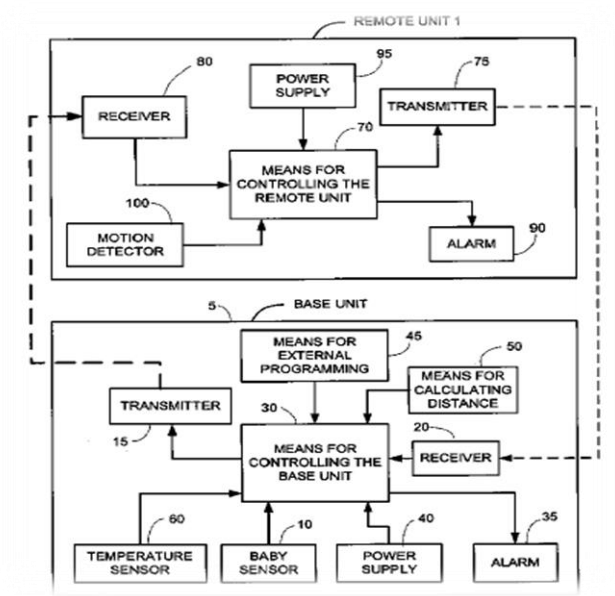

Figure-4. Block diagram of the baby seat occupant detection system consist of one remote unit and one base unit [12].

Based on block diagram in Figure 3, the system has at least one remote unit and base unit. The base unit is portable, light weight, water resistant and can be moved from vehicle to another and can be place under the child's car seat. The remote unit is usually attached to car keyor any other accessible place.

In N.M.Z. Hashim *et al* [13], the system was design to detect any sound and movement in the car when the children are left behind in the car and gave and alert through Short Messaging system (SMS).

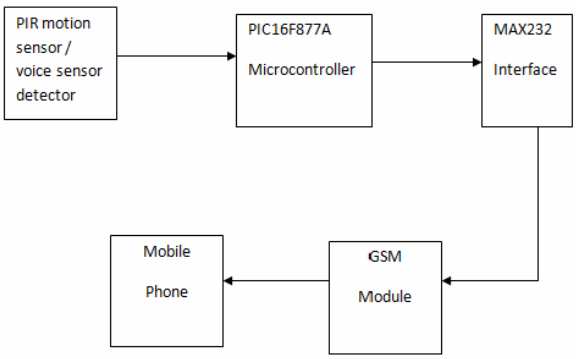

Figure-5. Detection system flow diagram [13].

According to Figure-5 above, this system involved two parts of theoperation; hardware and software development. A microcontroller, a motion detector and a GSM module are the main component used in this design.

The alerts were given once there are motions or voice detected. The microprocessor automatically received the signal from the sensors to give an instruction to the GSM module where the caregiver will get the warning SMS.

It may however be noted that most of the studies were aimed on the alert system using sensorsthat detected the child presence in the vehicle. In addition to these primary data [5]-[13], the incorporation with current technology that user friendly and portable has not been thoroughly investigated.

3. METHODOLOGY

To accomplish this aim and to respond to a recent call for research, an alert system using the current technology such Arduino and also smartphones are designed. The system consists of two parts, safety pad and keychain alert. Each of this part can be divided into hardware and software.

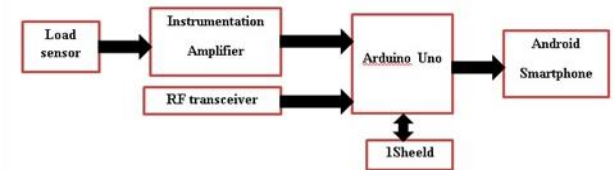

Figure-6. Block Diagram for the safety pad.

The flow diagram above shows how the system worked after the weight of the baby is detected. The Safety pad is proposed to be placed under the baby car seat's cover. There are three main components in the safety pad which are the load sensor, Arduino UNO^{TM} and 1Sheeld.A load sensor is used to converts a load or force pressure on it into an electronic signal. Depending on the type of load cell and circuitry used, the electronic signal received can be either a voltage change, current change or frequency change [14]. However, changes in voltage produced are so little, hence it required to use an instrumentation amplifier to amplify it into an appropriate value. For this research, TEM01052B type of load sensor is used where it ranges up to 50kg. Since it is a half-bridge type of load sensor, when it is being stretched, the signal will be send via the red wire [14]. After the signals are amplified, Arduino will serves as platform that compiled the coding and read the analogue values from the sensor itself.

Next, is 1Sheeld. It acts as an interpreter of the signal received from Arduino to the Android Smartphone. When the baby is placed on the seat, the voltage changeswhere Arduino will forwardthe information to 1Sheeld and give notification to the phone indicating that the baby is inside the car.

VOL. 10, NO 22, DECEMBER, 2015 ISSN 1819-6608
ARPN Journal of Engineering and Applied Sciences

www.arpnjournals.com

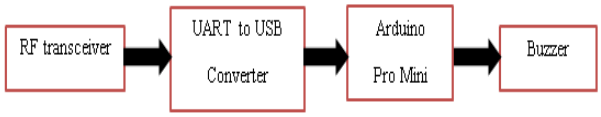

Figure-7. Block diagram of Keychain Alarm device.

For Radio Frequency (RF) transceiver, its work with the Keychain alarm device via RF signals as shown in Figure-7 above. Based on figure above, the key components used are Arduino Pro Mini as the main controller along with NRF24L01 transceiver that will work as proximity sensor that will result as backup security when they their particular RF signals are out of range (which means the parents away from the particular RF transmission range). Arduino Pro Mini is selected because of due to the little sizing to add inside the Keychain alert device. As for UART HARDWARE converter is used for compiling codes from the Arduino purposes. The keychain alarm will a security device for this project that aid to alertthe parents by beeping the alarm when a child is left inside the car.

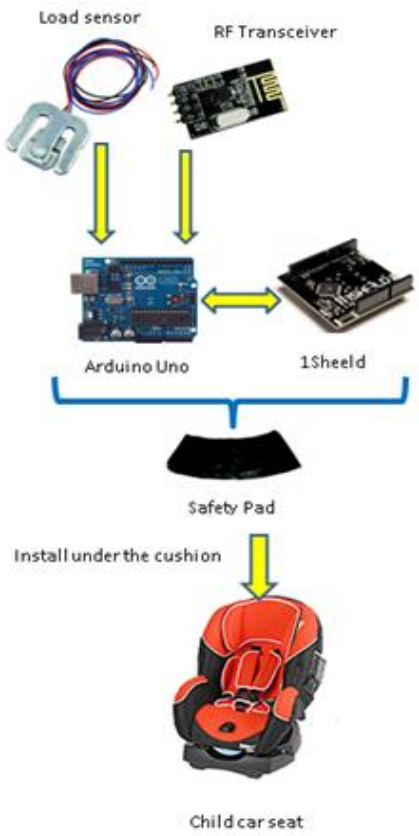

Figure-8. The overview of safety pad's design.

Figure-8 presents,

a) The input signals as discussed earlier will from the load sensor and Radio Frequency (RF) transceiver that goes into the Arduino platform
b) The system will be activated as the child placed onto the car seat.
c) Primarily, the presence of the child is continuously checked by Arduino. As the load sensor detected the load of child, the alert are send to the parent's smartphone via 1Sheeld communication in every few minutes. While RF signal from the transceiver checked any signal that comes from the transceiver of Keychain alarm device still in ranges.
d) When destination is reached and the parent start to leave the car without the child, the load sensor will still detecting the load of the child. Hence, the notification will alert to the smartphone.
e) But when the parent start walking away from the baby itself, the RF signal from the Keychain Alert device will lost its signal and start beeping to alert that the baby are left behind.
f) The keychain alert system are also as backup system if the parent's smartphone are either out of battery or left behind as well.

The overviews of the notification system are shown in Figure-9.

Figure-9. The overview of the notification system.

VOL. 10, NO 22, DECEMBER, 2015 ISSN 1819-6608
ARPN Journal of Engineering and Applied Sciences

www.arpnjournals.com

4. RESULTS AND DISCUSSIONS

To demonstrate the potential of this approach and its suitability for the application, the systems are investigated into two parts, hardware and software.

4.1 Hardware

In developing the hardware for the safety pad, two load sensors, INA 125P Instrumentation Amplifier and few resistors and Arduino UNO are used. The modules used are shown in Figure-10 below.

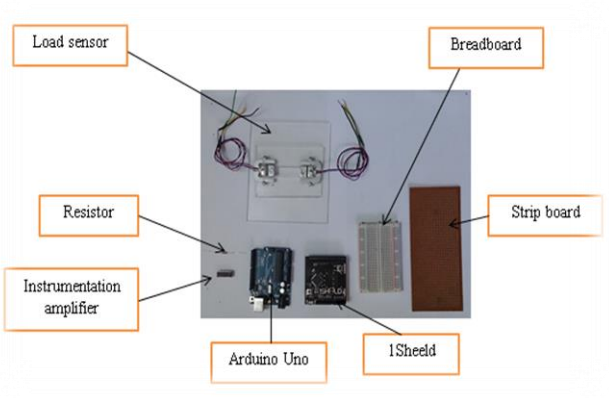

Figure-10. Components for the Safety pad circuit.

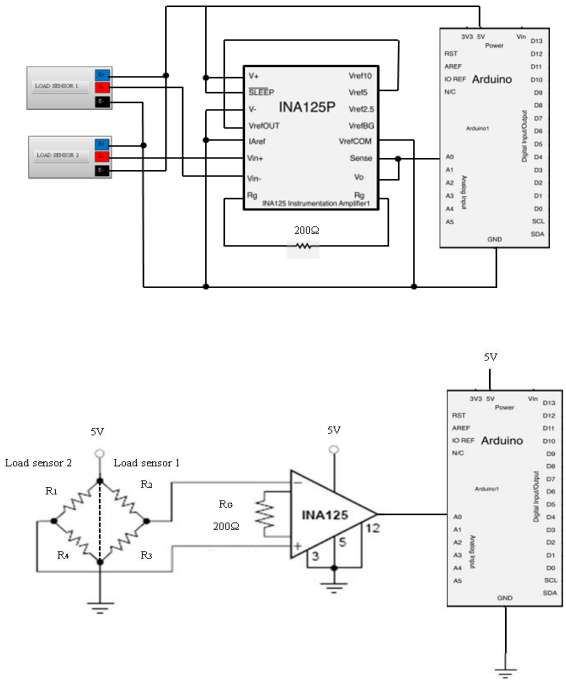

Figure-11. (a) Equivalent circuit (b) Schematic circuit design for the Safety pad.

The reason INA 125P Instrumentation Amplifier is used, to intensify the output of the load sensor and become readable to Arduino.

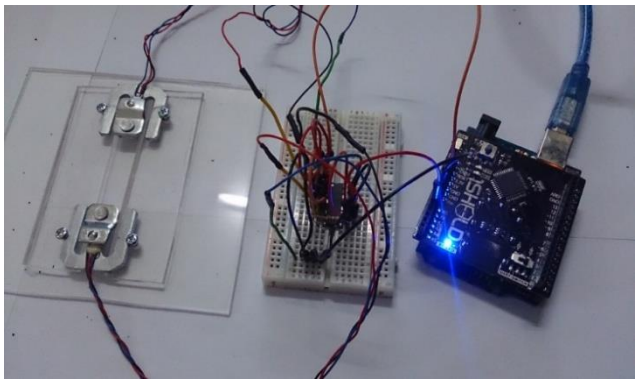

Figure-12. The constructed Safety pad circuit using breadboard.

As for the keychain Alarm's hardware, the module consist male to male jumper and UART to USB converter is used for coding compilation purposes as seen in Figure-13.

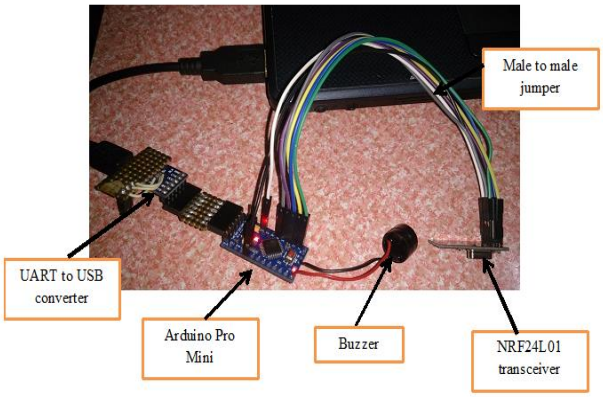

Figure-13. Connection of keychain alarm device (client).

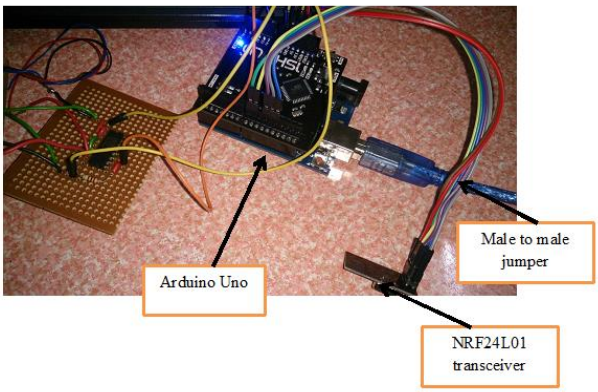

Figure-14. Connection of Safety pad (server).

Figures 13 and 14 shows the connection between NRF24L01 transceiver from the keychain and the transceiver at the safety pad. As mentioned earlier, the buzzer will alert the parent as they walking away from the vehicle without the baby.

4.2 Software

For software analysis, both programming for keychain and safety pad are made using C programming written in Arduino IDE software. The system has incorporated with a 1Sheeld system which comprise of a shield that is physically attached to Arduino board. 1Sheeld handling dataand it serves as wireless medium between Arduino and any Android smartphone via Bluetooth [15].

Figure-15. (a) 1Sheeld's notification apps (b) 1Sheeld hardware that connected to Arduino.

The software platform on 1Sheeld helps connect the Arduino to 1Sheeld's own apps on Android smartphones where it manages the communication between the any sensors from Arduino to the smartphone itself. For this system, 'Notification Shield' is used as the load sensor detect any weight on the safety pad. This notification feature will keeps giving alert for every few minutes as long as it detect any weight on the safety pad.

As for the keychain alarm, NRF24L01 transceiver is used with Arduino Pro Mini. The coding for NRF24L01 transceiver will always check whether the weight from the load sensor is still detected on the safety pad. If yes, when the parents still moving out of range from the transceiver, the beeping alarm will alert the parent through the keychain.

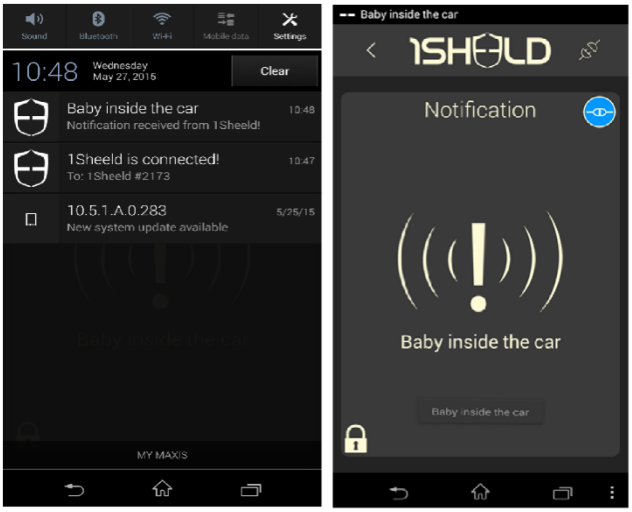

Figure-16. Notification received when the baby is detected on the safety pad.

5. CONCLUSIONS

In this investigation, the aim was to design and implement a wireless device that will triggers an alarm and send an alert to notify the parents if the child was left in the car. The system was successfully used the most important tech gear for people these days which is the smartphone. This project indirectly adds this BabyCare safety function to the smartphone.

This alert system will warn the parent via smartphone and alarm the parent using keychain alarm device when they leave the car without the child. There are three main components for this system which are load sensor, 1Sheeld and RF transceiver.

The results here may facilitate improvement in previous design presented in earlier literature review but it also provide the following insights for future research. The enhancement for the battery used for this system can be change to piezo-electric effect. This weight detected from the safety pad can be harvest to generate electrical energy in response to the applied mechanical stress given to the piezo material. This will lead towards battery-less design that is much more environmental friendly.

ACKNOWLEDGEMENT

Author would like to thank to Kementerian Pengajian Tinggi Malaysia, UTeM, ASeCs Research group and CRIM, UTeM for the funding and help given throughout the research.

REFERENCES

[1] J. Gilbert. Smartphone Addiction: Staggering Percentage Of Humans Couldn't Go One Day Without Their Phone. The Huffington Post.

[2] P. Ferrara, F. Vena, O. Caporale, V. Del Volgo, P. Liberatore, F. Ianniello, A. Chiaretti and R. Riccardi. 2013. Children left unattended in parked vehicles: a focus on recent italian cases and a review of literature. Ital. J. Pediatr. 39(1): 71.

[3] M. Luethi, B. Meier, C. Sandi, T. W. Buchanan, S. Louis, and J. F. Dominique. 2009. Stress effects on working memory, explicit memory, and implicit memory for neutral and emotional stimuli in healthy men. Vol. 2, no. pp. 1-9.

[4] Clarksville. 2011. Baby Alert International - Child Safety Devices. Clarksville Online. [Online]. Available: http://www.clarksvilleonline.com/2011/07/02/too-much-time-in-the-heat-can-kill/.

[5] F. R. M. Rashidi and I. H. Muhamad. Vehicle's Interior Movement Detection and Notification System. pp. 139-144.

[6] J. K. Lee, D. R. Spach, P. Srinivasan and D. P. Umstead. 2010. Wireless system to detect presence of child in a baby car seat. Google Patents.

[7] F. Mesina. 2005. Baby seat belt alarm system. Google Patents.

[8] M. A. Rossi. 2000. Warning system for detecting presence of a child in an infant seat. US 6104293 A.

[9] G. C. Kautz. Method and system for preventing leaving a child in an unattended vehicle. US 7786852 B2, 2010.

[10] J. Morningstar. 2007. Warning System For Child Left Unattended In Vehicle. US 7714737 B1.

[11] C. Owens. 2008. System and method for a child safety seat having sensing and notification abilities. US8038213 B2.

[12] S. T. Davisson, L. A. Sheehy, A. Caporelli, D. Ratz and K. R. Hilberth. 2011. Baby seat occupant detection system. Google Patents.

[13] N. M. Z. Hashim, H. H. Basri, A. Jaafar, M. Z. A. A. Aziz, A. Salleh and A. S. Ja. 2014. CHILD IN CAR ALARM SYSTEM USING VARIOUS SENSORS. ARPN Journal of Engineering and Applied Sciences. 9(9): 1653-1658.

[14] Loadstars Sensors. 2015. What is a Load Cell? How do Load Cells Work? [Online]. Available: What is a Load Cell? How do Load Cells Work.

[15] I. Integreight. 2015. 1Sheeld. [Online]. Available: http://1sheeld.com/.