VOL. 10, NO. 23, DECEMBER 2015 ISSN 1819-6608
ARPN Journal of Engineering and Applied Sciences

www.arpnjournals.com

SURVEY ON ENERGY HARVESTING COGNITIVE RADIO NETWORK

Mohammed I. M. Alfaqawi, Mohamed Hadi Habaebi, Mohammad Umar Siddiqi, Md. Rafiqul Islam, Alhareth Zyoud and Mohammed Al-Shibly
International Islamic University Malaysia, Kuala Lumpur, Malaysia
E-Mail: mohammedalfaqawi@gmail.com

ABSTRACT

Energy harvesting network (EHN) is a trending topic among the recent researches. This substantial attention is due to the limitations, operational cost and risks of the conventional power suppliers, such as fossil fuel and batteries. Moreover, EHN are expected to enhance energy efficiency by harvesting energy of RF and renewable sources. In contemporary research works, EHN is applied to CR technology. This energy harvesting cognitive radio network (EH-CRN) is expected to utilize both energy and electromagnetic spectrum efficiently. However, EH-CRN is facing enormous challenges related to technical design. Some of these challenges are reviewed in recent surveys. However, other challenges such as optimizing the network throughput and EH-CRN implementation models were not the focus of these researches. Therefore, the aim of this survey is to review EH-CRN research works by focusing the survey perspective on maximizing the network throughput and the implementation models.

Keywords: energy harvesting networks, cognitive radio, throughput.

1. INTRODUCTION

Wireless communication devices are power supplied from batteries. These batteries are required to be charged or replaced regularly [1]. However, in some technologies, such as thousands of sensors through or embedded inside building, inside human body and toxic environment, replacing batteries is not a convenient option [2]-[4]. Unlike the conventional powered wireless systems, energy harvesting network (EHN) is a promising technology with various benefits such as unlimited power, operating networks without cables or replacing batteries and reducing CO2 emissions [5]. The EHN enables wireless devices to harvest power of ambient sources such as vibration, renewable energy sources and RF waves [6]. Even though the amount of harvested energy still low, this amount is expected to be increased in future [1].

On the other hand, the rapid growth and the expanded development in wireless communications increase the demand on the electromagnetic spectrum. However, the spectrum resources are limited and most of the commercial bandwidths have been licensed [7], [8]. Nevertheless, often the licensed spectrum is not fully utilized which wastes the spectrum resources due to the inefficient utilization [9]. This leads to the emerging of new technology called cognitive radio (CR). The CR technology can efficiently utilize the spectrum by permitting secondary users (SU) who are the unlicensed users to sense, analyze and occupy the primary users (PU) or the licensed users channels when PU channel is idle [10].

Recently, new researches are introduced to implement both techniques of enhancing spectrum efficiency, i.e. CR, and enhancing energy efficiency, i.e. energy harvesting, in one network called as energy harvesting cognitive radio network (EH-CRN). However, this implementation requires to reforming the traditional CRN in order to satisfy energy harvesting constraints, i.e. energy causality and collision constraints. The energy causality constraint is defined by Park *et al.* [11] as, "mandates that the total consumed energy should be equal to or less than the total harvested energy." Meanwhile, the collision constraint requires as in [11] that "the probability of accessing the occupied spectrum is equal to or less than the target probability of a collision." These constraints are influence on spectrum sensing and accessing methods [1].

Various surveys are discussed EH-CRN, such as [1], [12] and [13]. These research works are interacting with our survey in some issues and also reflects the significance of this survey. However, the literature and perspective of this survey differs than the previous researches. For instance, Lu *et al.* [12] presented a contemporary survey to review the research works that discussed RF EHNs with wireless technology. This contemporary survey discussed the design issues of RF EHN with various wireless technologies such as multiantenna networks and CR. However, the survey research in [12] did not concentrate on EH-CRN. Therefore, it misleads some issues in EH-CRN such as maximizing SU throughput and some implementation architectures in CRN. On the other hand, Lu *et al.* [1] discussed the challenges that are facing EH-CRN. However, these two research works did not focus on the literature of throughput optimization in EH-CRN. For this specific reason, this research is motivated to review EH-CRNs. Our research scope is interacting with Mohjazi *et al.* [13] survey who reviewed the recent researches by focusing on some technical challenges in EH-CRN such as sensing duration and detection threshold. However, Mohjazi *et al.* [13] did not discuss EH-CRN architectures in the reviewed researches as well as some definitions and performance metrics for EH-CRN are not addressed. Therefore, we consider this survey, in some parts, is more comprehensive and critical.

This research is arranged as follows. In Section II the system model of various contemporary researches for

VOL. 10, NO. 23, DECEMBER 2015 ISSN 1819-6608
ARPN Journal of Engineering and Applied Sciences

www.arpnjournals.com

EH-CRN is reviewed. Then, Section III presents the research works that aims at maximizing EH-CRN throughput. Later, Section IV reviews the researches that discussed mutual cooperation of information and energy in EH-CRN. After that, future directions and open issues are presented in Section V. Lastly, the survey conclusion is drawn in Section VI.

2. THE SYSTEM MODEL OF ENERGY HARVESTING COGNITIVE RADIO NETWORK

Before proceeding to the trade-off between maximizing harvested energy and optimizing SU throughput, the utilized configurations of SU and PU in EH-CRN, which are presented in Figure-1, are explained.

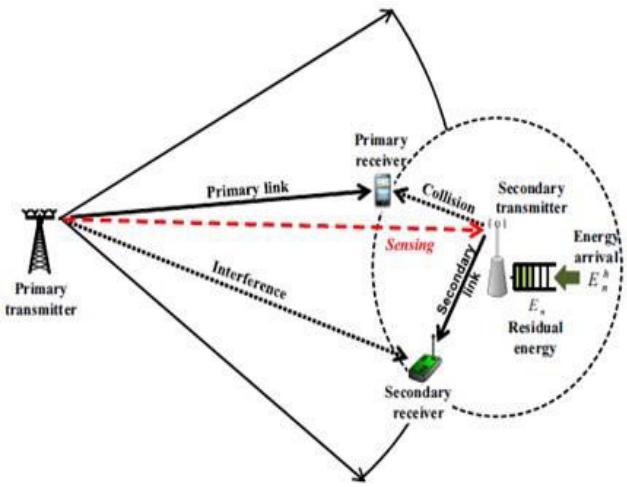

Figure-1. Energy harvesting CRN [16].

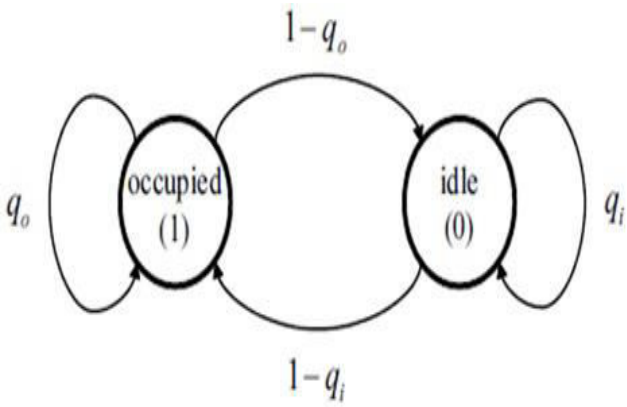

Figure-2. The state of PU network transition [6].

a) Primary user network

In [6]; [11] and [14]-[16], the PU network is assumed to consist of N channels where each channel bandwidth is W_n. The occupancy of PU bandwidth is considered a discrete-time Markov process with 2^N states. For each time slot with duration τ_slot, the state of PU channels randomly varies between 1 and 0 depends on discrete Markov process as follows,

C_n (t)∈{0(occupied),1 (idle)}

where C represents the channel occupancy state of the nth channel in slot t [14]. As shown in figure 2, the spectrum switches between the states, 1 and 0, with probability 1-q_0 [6].

b) Secondary user network

In [6], [11], [14]-[17] and [21], the SU transmitter is powered using finite capacity energy harvester B, as shown in figure 3. This harvested energy E_h (t) is stored in battery in order to utilize it for SU sensing and transmission operations. The energy arrival at the harvested queue is assumed Bernoulli random variables. However, in [11], the energy arrival is assumed as independent and identically distributed (i.i.d.) sequence of random variables while in [6] is assumed to be stationary ergodic and independent of PU channel state. Furthermore, Zhaowei *et al*. [18] assumed the arrival of energy is Gamma distributed that contains plenty of random variables such as exponential and Rayleigh functions.

In [14], two assumptions are addressed. First is SU always has data to transmit. Second is SU synchronizes its operations with PU time slot in order to switch between two modes i.e. a_t∈{0 (sleep),1 (active)}. As presented in figure 4, which indicates the operations of SU transmitter during only one PU channel, when a_t=0, SU transmitter turns off all its operations except the energy harvester. The consumed energy in this case is e_i.

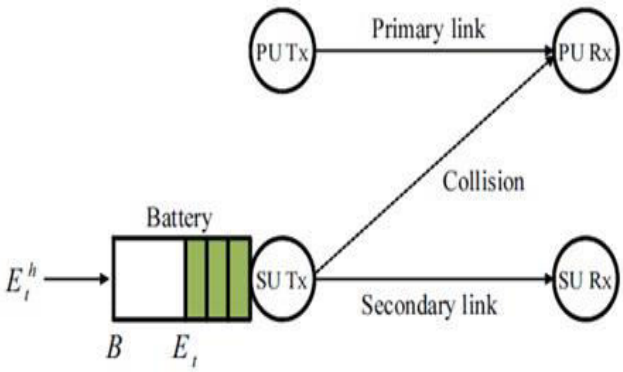

Figure-3. Energy harvesting SU transmitter [19].

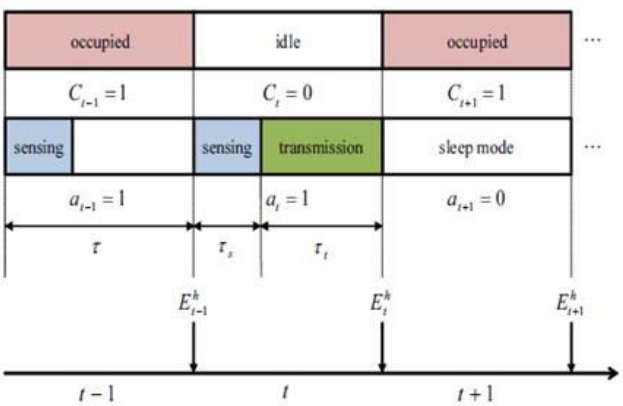

Figure-4. Sensing and transmit durations of synchronized SU and PU time slot [6].

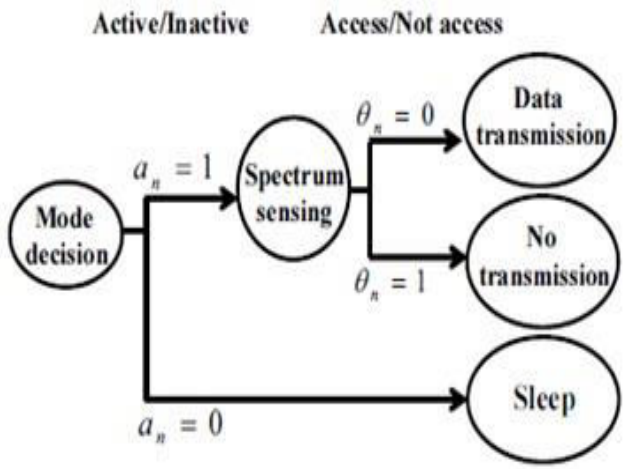

Figure-5. The mode operations at SU transmitter [16].

On the other hand, when SU be in active mode, i.e. $a_t = 1$, SU transmitter sense PU channel with duration τ_s and consume an energy unit e_s. Based on sensing operation, SU decide whether to access PU channel or not. In case the channel is occupied i.e. $\theta_t = 1$, SU does not send any data thus no more energy is consumed. However, when $\theta_t = 0$, SU transmitter begins to send data with duration $\tau_t = \tau_{slot} - \tau_s$ and consumes e_t [6], [14]. The mode operations at SU transmitter is clarified in Figure-5.

c) Wireless channel of EH-CRN

The channel between PU and SU, in [6], [15] and [19], is considered zero mean circularly symmetric complex Gaussian (CSCG) noise. Besides CSCG noise, Jeya *et al.* [15] employed a Rayleigh fading channel. On the other hand, Chung *et al.* [16] employs AWGN between all links. However, error-free feedback channel is assumed between SU transmitter and receiver in [6] and [15] in order to get perfect channel state information (CSI). This feedback channel is employed to acknowledge SU transmitter by the success of the receiver transmission through PU channel without collision. Furthermore, Jeya *et al*. [15] assumes that SU have partial knowledge about PU. This setup is employed in [20] with considering feedback channel that utilizes strong channel encoder. However, the CRN setup in [20] neither mentioned the channel type and its impact nor the encoder type. Meanwhile, capacity achieving AWGN coding is utilized in [16] in order to decode the received signals. However, Chung *et al*. [16] assumes that the received SNR of PU at SU transmitters and receivers are same.

Elshafie and Sultan [17] [21] assumed that transmitting one data packet consumes one energy packet. Unlike to Elshafie and Sultan [17] [21] where the system model overcome the data packet loss between PU and SU by assuming multipacket reception (MPR) at the receivers, Elshafie and Sultan [22] proposed model for EH-CRN considers collision channel that causes data loss.

3. MAXIMIZING THROUGHPUT OF SU

One of the key challenges in EN-CRN is maximizing SU throughput. Unlike to the conventional CRN where SU might be connected to the power source as well as the whole slot time for sensing idle channel then transmitting, in EN-CRN, the time slot is divided among harvesting, sensing and transmitting data. This policy of dividing the time slot is effecting on SU throughput. As the sensing duration increases, the accuracy of detection also increases. However, increasing sensing duration, results in decreasing throughput of data transmission. Therefore, next sections are reviewing this challenge in the contemporary research works.

a) Throughput vs. spectrum sensing accuracy trade-off

In EH-CRN, SU is required not only to detect idle PU channel but also it demands SU to detect occupied channels in order to harvest energy. Thus, various researches are proposed to achieve suitable trade-off. Park *et al*. [14] discussed the problem of maximizing the expected immediate throughput of EH-CRN by proposing a policy for sensing and accessing the spectrum.

The problem of proposing policy for sensing and accessing the spectrum is considered in [14] as partially observable Markov decision process (POMDP). Due to the required randomness policy to achieve optimized solution of constraint POMDP, optimum solution using constraint POMDP is found to be high computational complex. Thus, Park *et al*. [14] developed myopic suboptimal policy. The myopic policy of Park *et al*. [14] ignores the effect of the current states on the future states. Thus, the number of Markov states is reduced from 2^N to N. In addition, Park *et al*. [14] neglects the challenges facing spectrum sensing by considering perfect spectrum sensing. However, the results of the myopic policy shows enhanced throughput by 24% comparing to random accessing of PU channel. This research is extended in [11] by proposing an optimal policy that maximizes SU throughput considering energy causality and collision constraints. Based on [11], both constraints are limiting CRN throughput. Thus, a careful optimization is required for the network configuration.

In order to maximize SU throughput, [11] developed an optimal threshold that classifies the system between energy and spectrum limited regimes based on energy arrival rate and consumption, statistical spectrum occupancy and the spectrum sensing policy. The spectrum-limited regime is where the harvested energy is sufficient. Thus, SU can attempts to access the spectrum continuously while, in energy-limited regime, the amount of the harvested energy is limited which, in turn, results in limiting the attempts for accessing the spectrum. In addition, Park *et al*. [11] introduced new metrics to measure the performance of EH-CRN by applying energy constraint on both probability of detection and probability of false alarm. Thus, probability of accessing idle spectrum and probability of accessing occupied spectrum are defined by Park *et al*. [11] as, "the probability that the secondary transmitter will access the spectrum while the

spectrum was idle or occupied, respectively." Both probabilities are formulated as follows [11],

$$P_o(\varepsilon) = P_a(\varepsilon)(1 - P_D(\varepsilon))$$
$$P_i(\varepsilon) = P_a(\varepsilon)(1 - P_{FA}(\varepsilon))$$

where P_o is the probability of accessing occupied spectrum, P_i is the probability of accessing idle spectrum, P_a is the probability of SU transmitter in active mode and ε detection threshold.

Unlike to Park *et al*. [14] who considered perfect spectrum sensing, in [6] and [11], energy detector is utilized to sense PU channel. However, the proposed strategy by Park *et al*. [11] to maximize the throughput is developed in case of infinite battery capacity. Furthermore, the results of throughput were not benchmarked against other proposed methods.

In order to overcome the high level of POMDP computational complexity, Park and Hong [6] converts the constraint POMDP to unconstraint. Park and Hong [6] aims at maximizing the throughput under energy causality and collision constraints by optimizing sensing threshold ε_{opt} and spectrum sensing policy Π_{opt}. Thus, the spectrum sensing policies is classified in [6] into blind, aggressive, and conservative policies based on the ratio of the probability of sensing given an idle and occupied spectrum. Both probabilities are defined by Park and Hong [6] as follows, "The probability of sensing given an idle spectrum and the probability of sensing given an occupied spectrum, denoted as $Q_i(e_h, \varepsilon, \Pi) \triangleq P_r(active|H_0) = P_r(a_t^1|C_t^0)$ and $Q_o(e_h, \varepsilon, \Pi) \triangleq P_r(active|H_1) = P_r(a_t^1|C_t^1)$, are the probabilities that the secondary transmitter will select the active mode to execute spectrum sensing while the spectrum was idle or occupied, respectively, under spectrum sensing policy Π for a given energy arrival rate e_h and detection threshold ε."

Using e_h and ε constraints, Park and Hong [6] derived the feasible regions of probability of sensing the spectrum. After classifying the sensing policies of spectrum, Park and Hong [6] defined new metrics i.e. probability of Accessing the idle/occupied spectrum as follows, "The probability of accessing the idle spectrum and the probability of accessing the occupied spectrum, denoted as $P_i(e_h, \varepsilon, \Pi) \triangleq P_r(access|H_0) = P_r(a_t^1, \theta_t^0 |C_t^0)$ and $P_o(e_h, \varepsilon, \Pi) \triangleq P_r(access|H_1) = P_r(a_t^1, \theta_t^0 |C_t^1)$, are the probabilities that the secondary transmitter will access the spectrum while the spectrum was idle or occupied, respectively, under spectrum sensing policy Π for a given energy arrival rate e_h and detection threshold ε." Then, the feasible regions of probability of accessing the spectrum are derived considering e_h and ε constraints. Furthermore, Park and Hong [6] facilitated the high computational complexity of the optimal policy by approximating its solution. However, the derived optimal policy did not consider the effect of sensing duration. Based on [16], neglecting the joint relation between detection threshold and sensing duration, while optimizing the sensing threshold alone, limits the network performance due to the increased, of both, probability of detecting idle spectrum and collision probability with increasing the sensing threshold. Meanwhile, optimizing the sensing duration results in increasing the probability of detecting idle spectrum and decreasing collision probability [16]. Therefore, next section addresses the proposed methods that discussed the relation between optimizing SU throughput and reducing sensing duration.

b) Throughput vs. time slot of EH-CRN

Due to hardware limitations, SU can only operate in one mode i.e. saving, sensing or transmitting [23]. These three operations are intertwined as indicated in figure 6. For example, consider SU transmitter which is interested in harvesting more power. In this case, SU transmitter is required to be in sleep mode which may waste more opportunities to occupy idle PU channels. Meanwhile, SU may sense more channel which results in increasing the sensing duration. This, in turn, **increases** the consumed energy for sensing while decreasing the required energy for transmission. At the end, increased sensing duration leads to decreasing the network throughput. Therefore, new researches are introduced to optimize the saving, sensing and transmission durations.

The problem of optimal sensing and access policy is formulated for the first time by Sultan [20] as a Markov decision process (MDP). This optimal policy is specified by observing the activity of PU and the amount of stored energy. The performance of the optimal policy in [20] is compared to myopic policy. Sultan [20] found that the optimal policy is better than the myopic one. However, the optimal policy is found to be much computationally complex. On the other hand, [24] proposed an optimal structure for saving sensing transmission (SST) by considering the problem of maximizing the throughput as a mixed integer non-linear programming (MINLP). Contrary to [20] and [24] optimal structure considers joint optimization for both the amount of harvested energy and channel sensing. However, Sultan [20] and Yin *et al*. [24] assumed perfect spectrum sensing to derive their proposed policies.

Elshafie and Sultan [17] [21] proposed novel spectrum sensing and accessing methods for SU transmitter which is powered by energy harvester and rechargeable battery. These novel methods employ the concept of accessing PU spectrum randomly. In the first method SU access PU channel without considering any feedback between PU transmitter and receiver. Meanwhile the second method utilizes primary automatic repeat request feedback in order to acknowledge SU about PU transmission. The main objective of accessing PU channel randomly is to reduce the sensing duration or eliminating it which, in turn, leads to utilizing the whole time duration for transmitting [17]. However, these proposed methods are violating the protection of PU. Moreover, Elshafie and Sultan [22] discussed the optimization problem of time duration considering a probabilistic selection of sensing duration. In [22], SU determines the width of sensing duration using predefined durations. Then, perform

spectrum sensing to detect PU channel availability using energy detector.

The previous studies investigated maximizing SU throughput with neglecting the effect of energy causality constraint and detection threshold [16]. Thus, Chung *et al.* [16] proposed method that aims at maximizing SU throughput by proposing an optimal joint sensing duration and detection threshold considering energy causality constraint. Firstly, the operation regions of SU transmitter are classified into three groups. When the consumed energy is lower than the harvested energy, SU transmitter will be classified in energy surplus region. Meanwhile, SU is in energy deficit region, when the consumed energy is higher than the harvested energy. The equilibrium region is presented when consumed energy is equal to the harvested energy.

In order to examine the effect of energy constraint and duration time on EH-CRN, Chung *et al.* [16] introduced new metrics to compute the availability and collision probabilities. Chung *et al.* [16] defined both probabilities as follows, "The probability that the secondary transmitter accesses idle spectrum and is available to transmit data without interference is the availability probability, which is expressed as $[\![P]\!]_v(\tau,\varepsilon,e_h) = P_r(\theta_n=0|H_0) = P_a(\tau,\varepsilon,e_h)(1-P_{FA}(\tau,\varepsilon))$, while the probability that the secondary transmitter accesses occupied spectrum and its signal interferes with the primary network is the collision probability, which is expressed as $[\![P]\!]_c(\tau,\varepsilon,e_h) = P_r(\theta_n=0|H_1) = P_a(\tau,\varepsilon,e_h)(1-P_D(\tau,\varepsilon))$." Both probabilities, i.e. $[\![P]\!]_c$ and $[\![P]\!]_v$, are utilized in [16], in order to compare between constrained and unconstrained energy CRN.

The comparison using receiver operation characteristics (ROC) curve found that $[\![P]\!]_v$ of the energy unconstrained CRN is always higher than or equal to $[\![P]\!]_v$ of constrained energy CRN. In addition, longer sensing duration does not increase $[\![P]\!]_v$ of constrained energy CRN as in unconstrained energy case. This comparison formulates the problem of optimizing the sensing duration on EH-CRN. Thus, Chung *et al.* [16] proposed policy to maximize SU transmitter by shortening sensing duration. The policy of joint minimum sensing durations and proper detection threshold that achieve maximum throughput is derived based on energy regions, i.e. surplus, deficit and equilibrium.

Zhaowei *et al.* [18] concentrates on proposing an optimal saving sensing transmission method that maximizes SU throughput considering harvested energy, spectrum sensing and data transmission. The proposed method by Zhaowei *et al.* [18] assumes imperfect knowledge about the arriving energy at SU transmitter. However, the distribution probability of the energy arrival is assumed known. Moreover, perfect spectrum sensing is assumed. Meanwhile, the problem of optimizing SU throughput is formulated as mixed integer nonlinear programming (MINLP). Then, Zhaowei *et al.* [18] derives the optimal number of sensed channel, in active mode, by SU and the optimal saved power ratio. Despite the difficulty of solving MINLP problems, Zhaowei *et al.* [18] utilizes a heuristic algorithm to solve it. Nevertheless, employing heuristic algorithm solution is not guaranteed. However, selecting proper parameters could solve the heuristic algorithm [18]. The results in [18] are compared to the results when random channel selection is employed. The expected throughput in case of the proposed algorithm by Zhaowei *et al.* [18] is found to outperform the throughput in case of random channel selection at various timeslot and harvested energy. In addition, SU throughput is found to increase with increasing the rate of harvested energy. However, Zhaowei *et al.* [18] results are facing various degradations.

First, Zhaowei *et al.* [18] algorithm does not show how to select the proper parameters to solve the heuristic algorithm. Second, in the shadow of the assumption SU transmitter has always data to transmit, increasing harvested energy results in increasing harvesting duration. Thus, in turn, leads to decrease transmit duration which results in decreasing throughput. This means that the results, in [18], of increased throughput with increasing harvested energy is not optimal. In addition, the results do not discuss the impact of both energy causality and collision constraints.

c) Maximizing throughput by increasing transmit power

Chung *et al.* [25] studied the problem of maximizing SU throughput by increasing SU transmit power. The problem of maximizing SU transmit power under energy causality and collision constraints is divided into two sub-problems. First sub-problem is discussed in energy surplus region while second sub-problem is considered in energy deficit and equilibrium regions. Then, both sub-problems are combined in order to estimate the optimal solution to maximize SU throughput [25].

Based on [25], increasing SU throughput leads to decreasing SU probability of being active P_a. This, in turn, results in decreasing the probability of colliding between SU and PU. The SU transmit power is controlled in [25] by using the statistics of the random arriving energy.

Even though Chung *et al.* [25] derived an optimal solution to allocate transmit power, various challenges are still facing EH-CRN. These challenges are what is the mechanism to estimate then allocate the required power for sensing and accessing? In addition, what is the optimal mechanism to allocate power for SU when it operates between energy surplus, deficit and equilibrium regions?

4. INFORMATION AND ENERGY COOPERATION IN CRN

In contrary to the previous researches that discussed only information cooperation between SU and PU, Zheng *et al.* [26] proposed novel schemes that extend the cooperation of information only to include both information and energy. Thus, cooperation of two levels is suggested in [26]. In the first level, the SU serves as relay to PU while in the second level PU supplies SU with

power by cable or wirelessly. In order to achieve these levels, Zheng *et al*. [26] proposed three schemes where SU is assumed to be equipped by multiple antennas that deal with beamforming.

In the first scheme, SU and PU share the transmit power, i.e. ideal cooperation. Meanwhile, in the second scheme, SU utilizes part of PU data to harvest energy while the other part for decoding, i.e. power splitting. Lastly, the third proposed scheme suggests that SU reserves part of time slot for receiving energy from PU, i.e. time splitting. In order to achieve these schemes, perfect CSI is assumed to be known as well as amplify and forward protocol is employed at SU transmitter. Finally, Zheng *et al*. [26] proposed suboptimal solution for obtaining optimized SU throughput by employing zero-forcing (ZF) solution. Even though ZF solution is simple, it is applied, in [26], at dedicated example. In addition, the optimal solution was not benchmarked against other optimality solutions.

Unlike to Zheng *et al*. [26], who assumed perfect prior CSI knowledge at SU transmitter, Elshafie [27] proposed a novel space-time coding protocol for cooperation between SU and PU in EH-CRN that does not require any prior information about CSI. It is composed of one PU and one SU. Meanwhile, SU is equipped by two antennas, energy harvester and two infinite capacities for data queues. In this protocol SU serves as relay for PU packets. The proposed protocol in [27] manages SU operations, such as when it can relay PU data and when it can transmit its own data, in order to maximize SU throughput at certain level of network stability and queuing delay.

In contrary to the system model of the previous two researches, i.e. [26] and [27], the proposed system model by Wang *et al*. [28] for cooperation between SU and PU considers only one antenna at each one. Using this model, Wang *et al*. [28] proposed a protocol that utilizes energy harvesting and cooperative CRN where SU relays PU data. In this protocol SU harvest energy of PU data and ambient sources. After SU utilizes part of PU data for harvesting energy, SU forward PU data. The proposed protocol by Wang *et al*. [28] is found to achieve both SU and PU interests without data loss.

Unlike to all previous researches that aim at maximizing SU throughput during one timeslot i.e. current slot, Lu *et al*. [29] derived a solution that maximizes SU throughput during deadline of N slots. The system model CRN in [29] is assumed to be composed of one PU and three SU, i.e. source, relay and destination. Thus, in contrast to previous proposed system models, information cooperation in [29] is considered between SUs. In this model, SU serves as relay for data of other SU that represents the source. In addition, Lu *et al*. [29] system assumed that the consumed time for sensing the spectrum is zero as well as a prior knowledge of CSI is assumed. In order to maximize throughput of an energy harvester SU, joint architecture for power and information is proposed by Lu *et al*. [29]. Nevertheless, due to the high complexity of obtaining optimal throughput, an approximated solution is derived by Lu *et al*. [29].

The relay process in [29] was between SUs and considered amplify and forward operation. On the other hand, the relay process in [5] was between PU and energy harvester SU that decode and forward PU data. The philosophy of this research stems of that when SU serve as relay for PU, PU throughput will be enhanced. Thus, PU channel will be vacant earlier. An optimal cooperation protocol (OCP) is proposed in [5] that contains optimal decision and action. The optimal decision is where SU decide to cooperate with SU or not while optimal action is where SU quantify the amount of consumed energy and time on cooperation process. Moreover, the optimal action, in both cooperation and non-cooperation cases, is addressed in order to maximize SU throughput. Then, an optimal decision is presented based on a proposed optimal cooperation protocol (OCP). Finally, the results of SU throughput of the proposed OCP is found to outperform the throughput in case of non-cooperation, cooperation with random spectrum access and cooperation with underlay transmission. However, all the proposed researches in this part neglect the effect of spectrum sensing accuracy and energy causality and collision constraints.

Lastly, all the proposed research works to optimize SU throughput are summarized in Table-1.

Table-1. Summary of EN-CRNs research work.

Research	Objectives	Limitations
[14]	Discussed the problem of maximizing the expected immediate throughput of energy harvesting CRN by proposing a policy for sensing and accessing the spectrum.	- The problem of proposing policy for sensing and accessing the spectrum is considered as partially observable Markov decision process (POMDP). - The myopic policy of ignores the effect of the current states on the future states. - Neglects the challenges facing spectrum sensing by considering perfect spectrum sensing.
[11]	- Proposed an optimal policy that maximizes SU throughput considering energy causality and collision constraints. - Developed an optimal threshold that classifies the system between energy and spectrum limited regimes based on energy arrival rate and consumption, statistical spectrum occupancy and the spectrum sensing policy. - Introduced new metrics to measure the performance of EH-CRN	- Energy detector is utilized to sense PU channel. - The proposed strategy to maximize the throughput is developed in case of infinite battery capacity. - The results of throughput were not benchmarked against other proposed methods.
[6]	- In order to overcome the high level of POMDP computational complexity, the constraint POMDP is converted to unconstraint. - Aims at maximizing the throughput under energy causality and collision constraints by optimizing sensing threshold ε_{opt} and spectrum sensing policy Π_{opt}. - Defined new metrics i.e. probability of Accessing the idle/occupied spectrum	- Energy detector is utilized to sense PU channel. - Facilitated the high computational complexity of the optimal policy by approximating its solution. However, the derived optimal policy did not consider the effect of sensing duration.
[20]	- The problem of optimal sensing and access policy is formulated for the first time as a Markov decision process (MDP). - The performance of the optimal policy is compared to myopic policy. The optimal policy is found to be better than the myopic one.	- The optimal policy is found to be much computationally complex. - Assumed perfect spectrum sensing to derive their proposed policies. - Investigated maximizing SU throughput with neglecting the effect of energy causality constraint and detection threshold
[24]	- Proposed an optimal structure for saving sensing transmission (SST) by considering the problem of maximizing the throughput as a mixed integer non-linear programming (MINLP). - The optimal structure considers joint optimization for both the amount of harvested energy and channel sensing.	- Assumed perfect spectrum sensing to derive their proposed policies. - Investigated maximizing SU throughput with neglecting the effect of energy causality constraint and detection threshold
[17] and [21]	- Proposed novel spectrum sensing and accessing methods for SU transmitter which is powered by energy harvester and rechargeable battery. These novel methods employ the concept of accessing PU spectrum randomly.	- These proposed methods are violating the protection of PU. - Investigated maximizing SU throughput with neglecting the effect of energy causality constraint and detection threshold
[18]	- Concentrates on proposing an optimal saving sensing transmission method that maximizes SU throughput considering harvested energy, spectrum sensing and data transmission. - The problem of optimizing SU throughput is formulated as mixed integer nonlinear programming (MINLP). - Utilized a heuristic algorithm to solve it	- The distribution probability of the energy arrival is assumed known. - The proposed algorithm does not show how to select the proper parameters to solve the heuristic algorithm. - The results of increased throughput with increasing harvested energy is not optimal. - The results do not discuss the impact of both energy causality and collision constraints.
[27]	- Proposed a novel space-time coding protocol for cooperation between SU and PU in energy harvesting CRN that does not require any prior information about CSI.	- Neglect the effect of spectrum sensing accuracy and energy causality and collision constraints.
[28]	- Proposed a protocol that utilizes energy harvesting and cooperative CRN where SU relays PU data. In this protocol SU harvest energy of PU data and ambient sources. After SU utilizes part of PU data for harvesting energy, SU forward PU data.	- Neglect the effect of spectrum sensing accuracy and energy causality and collision constraints.
[29]	- Derived a solution that maximizes SU throughput during deadline of N slots.	- Assumed that the consumed time for sensing the spectrum is zero as well as a prior knowledge of CSI is assumed. - Due to the high complexity of obtaining optimal throughput, an approximated solution is derived. - Neglect the effect of spectrum sensing accuracy and energy causality and collision constraints.

5. FUTURE DIRECTIONS AND CHALLENGES

Various open issues and future challenges that are facing EH-CRNs are discussed in [12] and [13] such as utilizing beamforming and study the impact of this network on human health. According to this paper survey, we found some challenges which might be addressed in future.

- Spectrum sensing approach: The previous research works on EH-CRNs were utilizing energy detector or randomly access to PU channel. However, at low SNR the uncertainty of energy detector is high while accessing PU channel randomly results in violating PU privacy. Therefore, more accurate spectrum sensing approaches might be employed. However, increasing accuracy of spectrum sensing approaches leads to increasing the computational complexity. This, in turn, results in increasing the consumed power and sensing duration which leads to decreasing SU throughput. Thus, an accurate spectrum sensing approach is recommended which protect PU privacy and maximizing SU throughput is a challenge for future researches.
- Maximizing SU throughput: The utilized algorithms to maximize SU throughput are high computationally complex. This, in turn, results in increasing transmitting duration while decreasing sensing duration. Therefore, an optimum algorithm is required to maximize SU throughput with considering suitable sensing duration.
- Employing new technology: Wireless distributed computing (WDC) is a new concept which proposed mainly for devices has limited power sources. Therefore, some new technologies, such as WDC, might save EH-CRN consumed power and enhance SU throughput.

6. CONCLUSIONS

This survey is reviewing the contemporary research works in energy harvesting cognitive radio networks (EH-CRN). Herein, the architectures and models for primary and secondary users as well as the channel models are presented. The main focus of this survey is investigating secondary user (SU) throughput. Some research works are enhanced SU throughput by increasing SU transmit power while enhanced in other researches by optimizing time slot duration. Finally, this topic of EN-CRN is a new topic thus it still face enormous challenges.

ACKNOWLEDGEMENTS

This work is partially supported in part by the Malaysian Ministry of higher education (MOHE) under grant FRGS13-073-0314 and ERGS13-023-0055.

REFERENCES

[1] Lu Xiao, Wang Ping, Niyato D. and Hossain E. 2014. "Dynamic spectrum access in cognitive radio networks with RF energy harvesting, "Wireless Communications, IEEE, Vol. 21, No.3, pp.102, p. 110.

[2] Ho Chin Keong and Zhang Rui. 2012. "Optimal Energy Allocation for Wireless Communications With Energy Harvesting Constraints, "Signal Processing, IEEE Transactions on, Vol. 60, No.9, pp.4808-4818.

[3] Gao Xuemin, Xu Wenjun, Li Shengyu and Lin Jiaru. 2013. "An online energy allocation strategy for energy harvesting cognitive radio systems, "Wireless Communications & Signal Processing (WCSP), 2013 International Conference on, vol., no., pp.1-5, 24-26.

[4] Ercan Ali O., Sunay M. Oguz and Pollin Sofie. 2014. "Analysis of energy harvesting for green cognitive radio networks, "Cognitive Cellular Systems (CCS), 2014 1st International Workshop on, vol., no., pp.1,5.

[5] Yin Sixing, Zhang Erqing, Qu Zhaowei, Yin Liang and Li Shufang. 2014. "Optimal Cooperation Strategy in Cognitive Radio Systems with Energy Harvesting, "Wireless Communications, IEEE Transactions on, Vol.13, No.9, pp.4693-4707.

[6] Park Sungsoo and Hong Daesik. 2013. "Optimal Spectrum Access for Energy Harvesting Cognitive Radio Networks,"Wireless Communications, IEEE Transactions on, Vol. 12, No. 12, pp. 6166-6179.

[7] M. Alfaqawi, J. Chebil, M.H. Habaebi, N. Ramli and H. Mohamad. 2013. "A novel scheme for performing wireless distributed computing with strip spectral correlation algorithm," Communications (APCC), 2013 19th Asia-Pacific Conference on , vol., no., pp.387-392.

[8] Ray K. J. Liu and Wang B., "Cognitive radio networking and security: a game-theoretic view," Cambridge University Press.

[9] Ghasemi A. and Sousa E.S. 2005. "Collaborative spectrum sensing for opportunistic access in fading environments," First IEEE International Symposium on New Frontiers in Dynamic Spectrum Access Networks, 2005. DySPAN 2005., vol., no., pp.131,136.

[10] Xiao Y. and Hu F. 2008. "Cognitive radio networks," CRC Press, Auerbach Publications.

[11] Park Sungsoo, Kim Hyungjong and Hong Daesik 2013a. "Cognitive Radio Networks with Energy Harvesting, "Wireless Communications, IEEE Transactions on, Vol. 12, No. 3, pp.1386-1397.

[12] Xiao Lu, Ping Wang, Niyato D., Dong In Kim and Zhu Han. 2015. "Wireless Networks With RF Energy

Harvesting: A Contemporary Survey," in Communications Surveys & Tutorials, IEEE, Vol.17, No.2, pp.757-789, Secondquarter.

[13] Mohjazi L., Dianati M., Karagiannidis G. K., Muhaidat S. and Al-Qutayri M. 2015. "RF-powered cognitive radio networks: technical challenges and limitations," in Communications Magazine, IEEE, Vol.53, No.4, pp.94-100.

[14] Park Sungsoo, Lee Seokwon, Kim Beomju, Hong Daesik and Lee Jemin. 2011. Energy-efficient opportunistic spectrum access in cognitive radio networks with energy harvesting. In Proceedings of the 4th International Conference on Cognitive Radio and Advanced Spectrum Management (CogART '11). ACM, New York, NY, USA, Article Vol. 62, 5 pages.

[15] Jeya Pradha J., Kalamkar S.S., Banerjee A. 2014. "Energy Harvesting Cognitive Radio With Channel-Aware Sensing Strategy," Communications Letters, IEEE, Vol.18, No.7, pp.1171-1174.

[16] Chung Wonsuk, Park Sungsoo, Lim Sungmook and Hong Daesik. 2014. "Spectrum Sensing Optimization for Energy-Harvesting Cognitive Radio Systems,"Wireless Communications, IEEE Transactions on, Vol.13, No.5, pp. 2601-2613.

[17] El Shafie A. and Sultan A. 2012. "Optimal random access and random spectrum sensing for an energy harvesting cognitive radio, "Wireless and Mobile Computing, Networking and Communications (WiMob), 2012 IEEE 8th International Conference on, vol., no., pp.403-410.

[18] Zhaowei Qu, Qizhu Song and Sixing Yin. 2014. "Optimal spectrum sensing in energy harvesting cognitive radio systems, "Communications, China, Vol.11, No.5, pp.83-90.

[19] Park Sungsoo and Hong Daesik. 2013b. "Optimal Spectrum Access for Energy Harvesting Cognitive Radio Networks," Wireless Communications, IEEE Transactions on, vol.12, no.12, pp.6166,6179.

[20] Sultan A. 2012. "Sensing and Transmit Energy Optimization for an Energy Harvesting Cognitive Radio,"Wireless Communications Letters, IEEE, Vol.1, No.5, pp.500-503.

[21] El Shafie A.E., Sultan A. 2013a. "Optimal Random Access for a Cognitive Radio Terminal with Energy Harvesting Capability," Communications Letters, IEEE , Vol.17, No.6, pp.1128-1131.

[22] El Shafie A. Sultan A. 2013b. "Optimal selection of spectrum sensing duration for an energy harvesting cognitive radio," Global Communications Conference (GLOBECOM), 2013 IEEE , vol., no., pp.1020-1025.

[23] Yin Sixing, Zhang Erqing, Yin Liang and Li Shufang. 2013a. "Optimal saving-sensing-transmitting structure in self-powered cognitive radio systems with wireless energy harvesting," Communications (ICC), 2013 IEEE International Conference on , vol., no., pp.2807,2811.

[24] Yin Sixing, Zhang Erqing, Yin Liang and Li Shufang. 2013b. "Saving-sensing-throughput tradeoff in cognitive radio systems with wireless energy harvesting," Global Communications Conference (GLOBECOM), IEEE , vol., no., pp.1032-1037.

[25] Chung Wonsuk, Park Sungsoo, Lim Sungmook and Hong Daesik. 2013. "Optimal Transmit Power Control for Energy-Harvesting Cognitive Radio System, "Vehicular Technology Conference (VTC Fall), IEEE 78th, vol., no., pp.1-5.

[26] Zheng Gan, Ho Z. Jorswieck E.A. and Ottersten B. 2014. "Information and Energy Cooperation in Cognitive Radio Networks, "Signal Processing, IEEE Transactions on, Vol.62, No.9, pp.2290-2303.

[27] El Shafie A. 2014. "Space–Time Coding for an Energy Harvesting Cooperative Secondary Terminal, "Communications Letters, IEEE, Vol. 18, No.9, pp.1571-1574.

[28] Wang Zihao, Chen Zhiyong, Luo Ling, Hu Zixia, Xia Bin and Liu Hui. 2014. "Outage analysis of cognitive relay networks with energy harvesting and information transfer, "Communications (ICC), 2014 IEEE International Conference on, vol., no., pp.4348-4353.

[29] Lu Xiaomei, Xu Wenjun, Li Shengyu, Lin Jiaru and He Zhiqiang. 2014. "Simultaneous information and power transfer for relay-assisted cognitive radio networks, "Communications Workshops (ICC), 2014 IEEE International Conference on, vol., no., pp.331-336.