VOL. 10, NO. 23, DECEMBER 2015 ISSN 1819-6608
ARPN Journal of Engineering and Applied Sciences

www.arpnjournals.com

A BUSINESS INTELLIGENCE FRAMEWORK FOR HIGHER EDUCATION INSTITUTIONS

Nur Ain Zulkefli, Suraya Miskon, Haslina Hashim, Rose Alinda Alias, Norris Syed Abdullah, Norasnita Ahmad, Nazmona Mat Ali, and Mohd Aizaini Maarof
Faculty of Computing, Universiti Teknologi Malaysia, Johor, Malaysia
E-Mail: nurainzulkefli@hotmail.com

ABSTRACT

Stakeholders are progressively measuring the success of Higher Education Institutions (HEIs) in terms of graduation rates. Today, HEIs are under intense pressure to not only recruit students who have the potential to graduate on time, but also to detect and provide at-risk students with necessary remedial measures. However, most top management has difficulty in accessing data in their organization as the number of data increases continuously. Business Intelligence (BI) is one of the tools used widely to help organizations such as HEI to access and manage huge volumes of data. The features provided in BI tools enable managers to make accurate and effective decisions at the appropriate time and in the right format. Through systematic literature review (SLR), this paper discusses formulation of Business Intelligence framework for deploying solutions in HEIs that guides current practice and for the future research.

Keywords: business intelligence, framework, higher education, decision making, university, data, performance.

INTRODUCTION

Decision making is an essential issue in every organization in order to meet targets of business performance indicator and to improve business processes. Generally, top management of an organization has limited of accessibility to data of their organization as most of the time, the data is locked and not fully accessible to the management [1]. This lack of data accessibility causes the top management to make decisions with little or no reference to appropriate data.

Appropriate data plays a crucial role for effective decision making [2] as relying on intuitions can be dangerously unreliable in complicated situations [3]. An increase numbers of student and staff populations in Higher Education Institutions (HEIs) lead to complexity in the process of managing and handling the various data. Each of these data own different requirements and it is very crucial for university academic and performance results [4]. Hence, a tool such as Business Intelligence (BI) can help the organization leverage their instinct in order to make an effective decision through disciplined process of valuable information [5].

According to Molensky, *et al.* [6], BI is a process involved of monitoring and analyzing data to be transformed to information and knowledge for decision making activity and achieve business organization level. BI can be simplified as "information discovery and analysis, making it possible for decision makers at all level of an organization to more easy to access, understand" [5]. In addition, BI is also able to provide accurate information with appropriate tools for data analysis [7].

BI system has become an important solution for decision making in various organization in the last two decades [1] as it manage large volumes of raw data to be more accessible, clear and useful and presents and visualizes valuable information using an appropriate tool. BI also facilitates users to dig and extract valuable information for effective decision making [5]. Thus, BI is also known as "an ICT tool that allows its users to leverage the best use of their data, summarizing and aggregating information" [2]. BI also able to support strategic and operational decision making and risk assessment in a dynamic business environment [8].

BI comprises a main task including "processes and activities to refine, analyze and manage large amounts of information related to business and business environment and to provide the decision makers the easy access to processed information"[9]. From the perspective of HEIs, BI can facilitate strategic vision by analyzing the graduates' employability rates, strategic planning analysis and also comparative results of education quality across different units within the university and across universities [7]. Moreover, BI provides HEIs better prospect by providing only a valuable information regarding the performance of the university which can be used by university's top management [10].

BI can increase organization performance as it supplies effective assists for top management to have valuable real-time information in hand [11]. Therefore, BI is one of the means to help the university's top management to make a decision by changing the way data is consumed, analyzed and leveraged, "one way of viewing BI in context of education environment is using BI for decision support of universities' management" [7]. BI can provide effective capabilities in generating and delivering different kinds of report such as universities' annual performance reports [12]. This reports able to facilitate the university's top management monitoring the university's performance level.

Anecdotal evidence suggests that universities are good candidates for BI [13] and have a lot of potential in further exploiting the BI capabilities. Drivers contributing to increased interest in BI within the Higher Education (HE) sector include: continuing growth in student and staff numbers, recruit the best students, graduation rates, attract more funding, increasing competition between institutions,

government pressure to improve operational efficiency, and the diverse and shifting expectations of stakeholders.

Universities have been described as combining "hierarchical administration with a peer philosophy that views professors as self-governing colleagues (or a community of scholars) and decentralized departments that often operate independently rather than as part of an organization, and myriad constituencies served by the university" [14]. While previous studies on BI from other industry contexts can provide useful insights, it is believed that studies specific to the HE context are required to provide insights that are genuinely relevant to BI within the HE sector.

The available literature studies in BI are broad but the studies of BI framework specifically in an academic environment are still limited [7, 15]. Thus, this study intends to identify components of a BI for HEIs that could help a university to manage large volumes of data and at the same time able to facilitate the university's management in making an effective decision. As stated by, Muntean, *et al.* [7] university also requires a framework that describes layer and components that effectively support the execution of strategic objectives and facilitate [10] the efficiency in decision making for the university itself. Additionally, it also aids as a guidance for the university's management to gather the valuable real-time information that facilitate them to make prediction of future performance of their institutional development and take an improvement action in ensuring the strategic target for the university performance is achieved [10].

The remainder of this paper has been structured as follows. Research methods are presented on the following section while data analysis and findings are presented and discussed in the subsequent section. The paper concludes with a summary of the findings and outlook for future research.

RESEARCH METHOD

This section is specifically dedicated to reviewing literature on the availability of BI Framework. Thus, this review article adopted the qualitative approach presented by Miskon, *et al.* [16].

In this approach, we applied a four stages method to identify and extract the related articles, actual coding and analyze, and report the literature-based findings. The first stage method is identifying and extracting the articles that need to be included in this review paper. The second stage involved preparing the details of analysis and followed by analysis and actual coding. The last stage of this paper is writing-up the research findings.

In identifying the articles to be included in this review, several online databases such as ACM, IEEE, ScienceDirect, Scopus, Springer-Link and Taylor Francis Online were searched. The main objective of this paper is to identify BI Framework for the HEIs. Therefore the keyword "Business Intelligence Framework" was searched for in the title, abstract and keywords of the sampling frame which was described above. The first round of search yielded only 2 papers that related with BI Framework for HEIs.

As this extraction of the article resulted with only 3 articles, we continued the search strategy by extracting papers that may have mentioned Business Intelligence Framework in a meaningful way in the body text of the articles. At this phase, we decided to conduct a systematic search for "Business Intelligence" AND "Universit*" and "Business Intelligence" AND "Framework" AND "Academic" OR "Universit*"in the body-text of the papers within the sampling frame and also Google Scholar. Hence, 15 of collected papers addressed the research aim. However, since studies of BI Framework for universities are very few in number, we decided to broaden the published paper of literature to Google Online Database. By extending the research, the searching strategies enabled the researcher to identify other related articles and journals.

Actual coding and analysis took place in multiple rounds. The main categories of the BI framework from Muntean, *et al.* [7] were used as the primary classification categories in the detailed coding - enabling any new categories to also emerge – if supported with the literature evidence. Thus, the content captured under the "BI Framework" high level node, were mapped (coded) against the categories of the a-priori framework.

For writing up the research findings, researcher presented the result in an objective manner of the literature. The goal of this paper was to identify the reported available BI frameworks related for HEI purposes.

DATA ANALYSIS AND FINDINGS

This section explains analysis of data related to the layer and components of BI Framework for HEIs. From 15 papers, only 5 papers discuss mainly on BI framework, see Table-1 for detail description of each framework.

Table-1. Description of BI Frameworks.

Framework	Description
BI Framework for University [7]	This paper provides a framework and component dedicated for university's management as a guidance to implement BI solution in their institution.
Ladder of Business Intelligence (LOBI) [17]	LOBI Framework is one of the frameworks that focus through the detailed analysis of people, process and technology. It also focuses analyzing the core business processes which have most impact on business performance. LOBI Framework derives the plan and architecture on the basis of the business objective.

Framework	Description
Business Intelligence driven Data Mining (BIdDM) [18]	BIdDM is a four layered framework comprises Knowledge Layer, E-Service Layer, Method Layer and Data Layer constructed by top-down approach process. It is a combination of knowledge-driven data mining and method-driven data mining to fill the gap business intelligence knowledge in e-commerce and current various data mining methods
Software as a Service (SaaS) BI Framework [19]	A unified five layered framework with each components provide as a service. It is also delivers BI multiple source data integration, and data analytics as a comprehensive solution to meet the need of organization.
Framework for Business Intelligence [20]	A three layer basic structures framework that separates data, logic and access component develop in tight interaction with the practitioner both from supplier and application side.

From the literature review as presented in Table-2, several components are identified which are similar as components in BI framework for University discusses by Muntean, *et al.* [7]. Therefore, BI framework for University components refer as the main references due to the components matched with the HEIs environment.

Table-2. Components in BI Frameworks.

	Framework / Component	Muntean, et al. [7]	Cates, et al. [17]	Hang and Fong [18]	Liyang, et al. [19]	Baars and Kemper [20]
1	**University Vision**	/				
2	**University Strategy**	/				
3	**Key Performance Indicator**	/				
4	**Key Business Processes**	/				
	4.1 Method Layer			/		
	4.2 Logic Layer					/
5	**People**	/	/			
6	**Process**	/	/			
7	**BI Technologies**	/			/	
	7.1 Reporting Service				/	
8	**Information Infrastructure**	/				
	8.1 Infrastructure Layer				/	

There are eight (8) main components of BI were identified, as summarized in Figure-1. An organization such as HEI required a framework which defines each of the components to deliver their strategic vision and plan by implementing it to their organizations [7].

The framework components include University Vision and Mission, University Strategy, Key Performance Indicator, Key Business Processes, People, Processes, BI Technologies and Information Infrastructure.

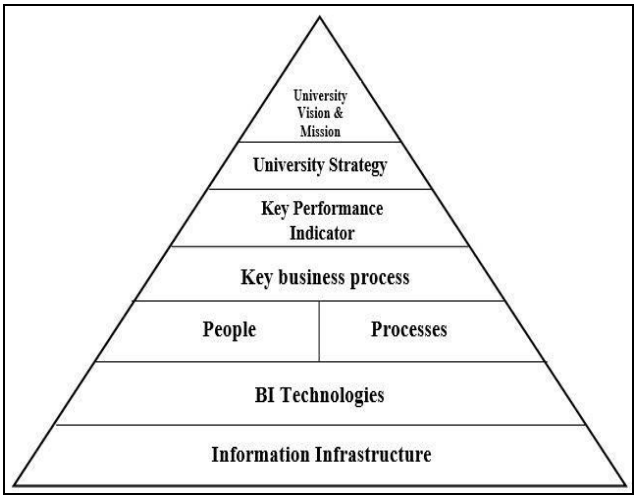

Figure-1. A BI Framework for University

University vision and mission is an important description of the university desired outcomes and university future direction. It is a complementary component and core purposes providing university direction for long-term orientation. According to Cates, *et al.* [17], LOBI framework concepts agrees that apply business vision and mission as important component for the company direction for the upcoming years. Vision and mission is very significant in every organization as it remains part of the development of organization strategy [21]. Vision can be defined as a clear explanation of the organization objective and goal need to achieve within certain period of time [22]. Vision is an essential element to organization as it is part of success route for the organization which states optimism and possibilities for the upcoming desired future [21]. Mission is a statement that describes the existence of an organization that relates to the present and future direction without any timeframe [21] and it is used to help guide decisions makers about priorities, actions, and responsibilities. Organization without mission prone to face difficulty situation to maintain their organization future direction as it plays an important component for the organization strategy plan, "the foundation of any strategic plan is the institutional mission statement. This statement delineates, in concise language, why the institution exists and what its operations are intended to achieve" [22].

Hence, in HEIs perspective, vision and mission statement crucial in providing an important component of the university overall strategy and acts as a guideline for

the future direction for the university to maintain its performance level. Hence, vision and mission important as it provides institutional unique identity to the university [23].

University strategy is a detailed university plan for achieving goal and success in any state of situation. Strategy can assist university in establishing priorities and to better serve the needs of the university. To successfully execute university strategy, university needs the strategy links with the financial and operational objectives. Effectiveness of university strategy rely and link on clear and concise of university vision and mission [23]. Additionally, well-defined financial and operational objective assists university to successful university strategy development. These important elements can be classified as a part of university strategy and metrics. Thus, it helps for the sustainability of the university, measuring the university performance level and support the strategic decision making. In this particular level, it referred as a decision making level managed and defined by the university's top management.

University Performance Model uses Key Performance Indicator known as KPI as a metric to evaluate factors that are needed by university. KPI is an evaluation index of quantitative and qualitative performance of an organization [24]. This KPI is crucial to university as it acts as measurement of performance level. It needs to be established and monitored for the university management in order to measure the particular indicator has been achieved as strategic targets or not. BI often uses KPI "to access the present state of business and to prescribe a course of action" [11].

From HEIs perspective, it serves as a metric to evaluate and monitor factors that are needed by university in planning and improving university performance scale [24]. University requires KPI to measure results and performance as well as their quality of education and teaching offered [4]. There is a concept of Ladder of Business Intelligence (LOBI) Framework similar for University Performance Model component. LOBI Framework uses balanced scorecard (BSC) which provides a mechanism to measure the performance level of a business. The scorecard is established with four perspectives including a financial perspective, a customer perspective, an internal process perspective and a learning and growth perspective [17]. Furthermore, the BSC also able to facilitate university management to monitor their performance level against strategic goals and align university activities to their own vision and mission [20, 25]. Ideally, "the performance measures need to be derived from the university strategies and from an analysis of the key business processes required to achieve those strategies and therefore this performance information must be presented to academic supervisor staff in a concise, intuitive format to support the university management processes" [7].

The main key business processes involved in this framework are academic processes. According to Alnoukari [1], there are several numbers of core university management daily operations and processes including academic data processes, financial data processes, human resource data processes and quality assurance automated data processes. These processes are vital for each university as their organization's sustainability and performance level. "All activities carried out in the context of business are part of business process"[17]. University key processes including education, basic scientific research, community service and training skilled and qualified manpower [23]. Other examples of key business processes for a university are; recruitment and admission, teaching and learning, supervision, research, and faculty loads as depicted in Figure-2. Business Intelligence driven Data Mining (BIdDM) Framework, Method Layer uses process as an activity to transform raw data into meaningful representation using data mining algorithm [18]. As well as BI Framework by Baars and Kemper [20] stated, Logic Layer comprises process analyzing which the raw data transforms into knowledge and support the distribution of the knowledge.

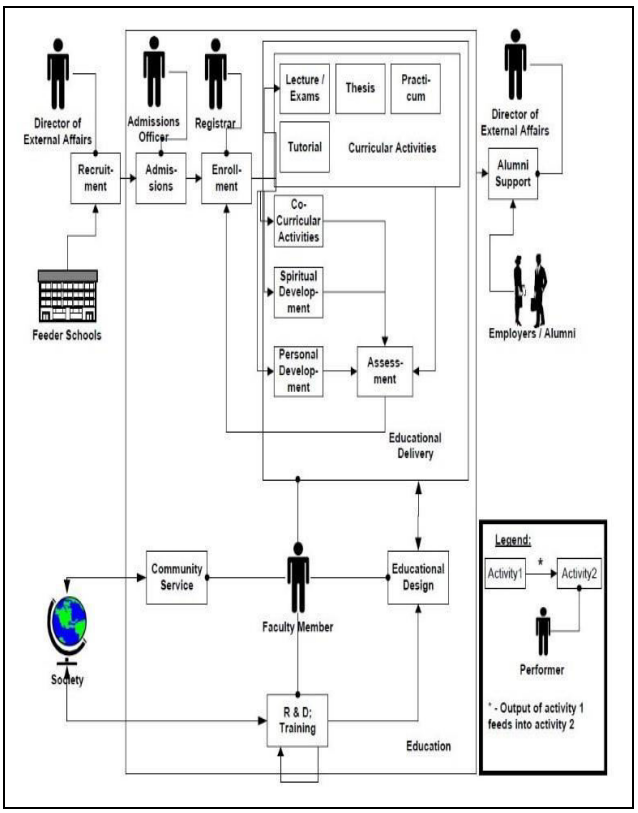

Figure-2. Example of value chain of key business processes in academic environment (Extracted from Sison and Pablo [26]).

Process can be defined as "a series of related activities that designed to gather input and convert it into a desired result" [17]. In the academic environment, process is more appropriate to be defined as "The key didactic processes which involve education management processes such as defining curricula, student registration and student completion of studies" [7]. Key business process is an activity or a set of activity that are vital for achieving an

organization strategy. Business process is defined as a series of steps, tasks or activities which utilize the resources that convert input to be an output product [17]. Processes are required to be implemented in every business or organization function. In LOBI framework, Cates, *et al.* [17] describe the process relates activity of transforming raw data, facts and symbols into information, knowledge, and finally transform to intuition for business decision making activity. Thus, key business process used in this framework aid university to implement it business function to achieve the strategy stated in the upper level.

People is classified in this framework as a variety of users in university which have different roles and functions in analytics, business and decision processes [7]. Additionally, these users also require different types of analysis, delivery of information and data. According to Jusoh, *et al.* [27], the people involved in this framework are the corresponding users who are involved in academic and non-academic management such as university's top management, administrative and academic staffs, hostel supervisors and students. The way people perform their role in the university is changing. Today, people can no longer sit, restrict and control the flow of information within the university. This information must be made available to the people if the information is very important for them to make important decisions for the university. Sometimes different types of users require the same information in different ways. For example the way information is to be delivered should be customized [28]. People in this framework is specified as users involved with vision and mission and also organization strategy development as mentioned by Cates, *et al.* [17] in LOBI framework. Thus if possible, people who involved in this framework is able to see instantly the information that is relevant for them. In the HEIs environment, process is an activity which transform the large volumes of data available in university into information and knowledge for the top management to make the effective decision making [29].

Another component of this framework is BI Technologies. This framework component preferred dashboard as one of the visualization tools for delivering and displaying the core business intelligence to the users as depicted in Figure-3. Dashboard can visualize a multi-dimensional datasets from the combination of linked chart [30]. A well-designed interactive visualization dashboard can aid users gain insights into data, identify trends and patterns, make decisions [30] and communicate with problem arises that required corrective action [12]. From the university perspective, dashboard allows users in identifying the university performance, making data comparison across department and also analyzing data from different of viewpoints for better decision making [7].

Figure-3. Example of dashboard (Extracted from Micheline and Bezerianos [30]).

Generally, scattered and large data cannot be easily embedded into any kind of BI system and be expected to directly produce actionable results. The data needs to go through several preparatory stages before it is ready to be visualized and presented in the form of a report or a BI dashboard. Data is stored in various sources such as systems' database, excel file, documents, plaintext files or pictures and other multimedia information [8]. These sources need to be extracted in to BI solution in the first stage. Accessing and integrating data from various data sources and storing it, usually into a data warehouse. If the BI tool is unable to connect to the sources natively, an additional plug-in or development work is needed. Figure-4 depicts an example process of how data from various sources can be extracted and stored for analysis purposes.

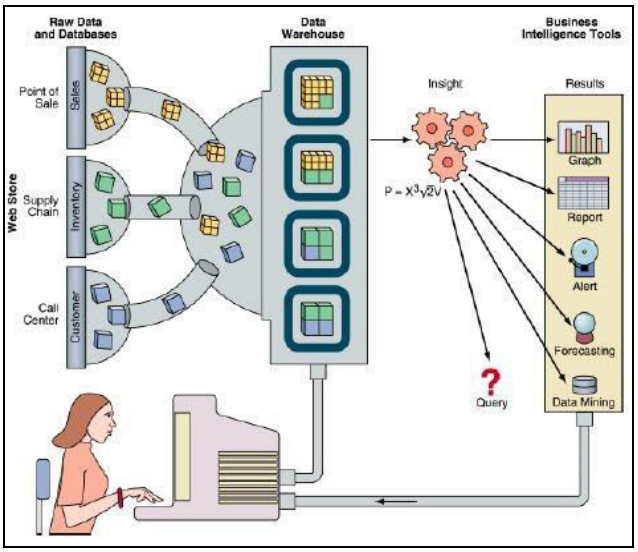

Figure-4. Example of disparate sources retrieved for analysis (Extracted from Ranjan [11]).

VOL. 10, NO. 23, DECEMBER 2015 ISSN 1819-6608
ARPN Journal of Engineering and Applied Sciences

www.arpnjournals.com

According to Venkatadri, *et al.* [5], in order to maintain the accuracy and integrity of the data, efficiency of data, reduction of data storage [8] and as well as to improve the correctness of information, all data will undergo a process called the data cleaning process later. The data from several databases or various data sources such as MySQL database and excel file needs to process into a single data format prior to further processing [27] as depicted in Figure-5. This data later will be loaded into a unified data format. In SAAS BI framework, Knowledge Discovery Service (KDS) component includes pre-processing and cleaning data which process of removing the inconsistencies or noises from raw data to a cleaned data [19].

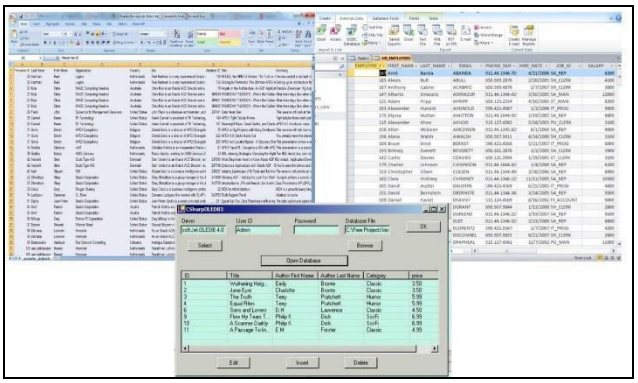

Figure-5. Example of various data sources (Microsoft Excel, Microsoft Access, and Database System).

In order to enable university's top management to make data-driven decisions, the BI technologies needs to process the data into easy-to-understand information. This needs a set of technologies and processes that use data to understand and analyse business performance. Figure-6 depicts an example of data access and reporting, and analytics. Analytics here means "the extensive use of data, statistical and quantitative analysis, explanatory and predictive models, and fact-based management to derive decisions and actions" [31].

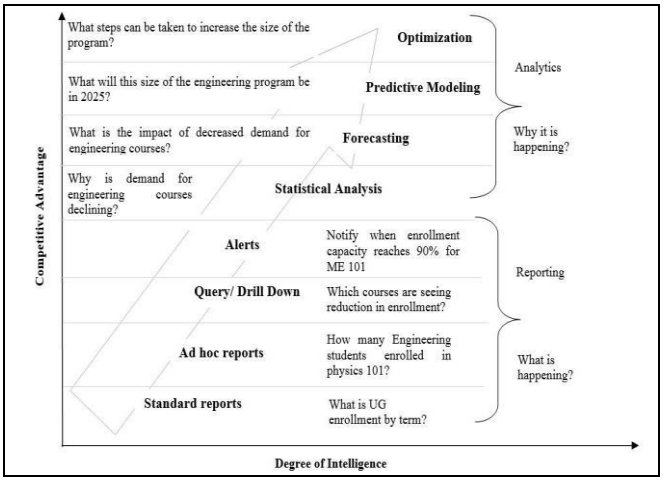

Figure-6. Example of type of reporting and analytics (Extracted from University of Michigan [32]).

Another preference of BI Technologies for academic environment is Business Intelligence Reporting Tool (BRIT) mentioned by Jusoh, *et al.* [27]. It acts as a visualization tool for generating and illustrating a report for user to analyze the data to gather results. Additionally, BRIT tool can be used to produce and generate report and allows the user to recognize trends and patterns in data and present the report in interactive and professional ways [27]. In LOBI Framework, Cates, *et al.* [17] defined technology as a measure of the capability of an organization for utilizing intelligence to make decision. The implementation of technology facilitates business intelligence to measure the capacity of a business to impressively enable business decision through access to intelligence. Sohail, *et al.* [33] stated that visualization is important to figure out the information as in the data visualization layer provide pre-built dashboard with the right visualizations. The capabilities of BI Technologies to access in a holistic view of performance gives a benefit and advantage for generating report requirements [34]. Business Service Layer is a component in Software as a Service (SAAS) BI Framework and Reporting Service is a sub-component of Business Service Layer. Reporting Service deals with visualization technologies as well as providing a web-based report with available reporting tools and services [19].

Information infrastructure in this study, "addresses the data architecture and also data integration infrastructure to ensure effectiveness and agility to react to the changes in business requirement" [7]. Information infrastructure components include, an enterprise data warehouse or/and data mart or/and an operational data store (ODS) or a real-time data warehouse [7]. Data warehouse is the significant main components for huge data storage for an organization [8, 11]. Data marts similarly with data warehouse which store operational data based on the needs of a given department. According to Aziz, *et al.* [15], a data warehouse can facilitate the data-analysis and support fact-based business decision making by transforming the data in organized manner. An organization such as a university needs a data warehouse to provide a centralized source of information where this warehouse should provide high volume of storage devices to store the information [5]. Information infrastructure can be identified and classified as data which is stored in a data warehouse where it can be used for analysis purpose [27]. It acts as information storage where the data warehouse is integrated with the client information. In Software as a Service (SAAS) BI Framework, Infrastructure Layer acts as a layer "provides common hardware, software and facilities including network, storage, and computing resources"[19]. In future, the information infrastructure needs to intelligently manage massive amounts of data to exploit the data and information that are available. This is to ensure efficient communications and decision making can be made in the institution.

CONCLUSIONS

Universities are constantly seeking new technical and managerial approaches to making better use of data and information available due to the increasing amount of data being collected and distributed from internal and external sources. Advances in emerging ICT have enabled universities to develop innovative means to collect data that may not be possible before. However sometimes "this leads to the explosion of data and unprecedented challenges in making strategic and effective use of available data" [35]. Therefore this BI framework consists of eight main components which are University Vision and Mission, University Strategy, Key Performance Indicator, Key Business Processes, People, Processes, BI Technologies and Information Infrastructure that are expected to help the university deploying the BI solutions.
The framework was derived from analysis of content observed in the literature. It starts to capture the complex, interrelated components of BI benefits, which can inform prioritization and management in deploying the BI solutions. Through BI solution, it is expected the university's management able to handle reporting among variety of users and manage huge amount of data to be transformed into valuable real-time information. Furthermore, a BI framework also can facilitate the university to structure the process of improving the BI solution and helps to implement the university's BI strategy in a very cost effective way. Eventually, BI projects will be more successful, cost less and deliver more value to the university's BI users. Hence, this initial BI framework can be used as a guideline as it gives better definition for strategic vision in HEIs environment. Furthermore, we believe this initial framework is able to bring together the four main business drivers of an institution namely; people, plans, processes and performance that able to help the university's management deploying BI solution.

ACKNOWLEDGEMENTS

The authors would like to thank the Ministry of Higher Education (MOHE) and the Universiti Teknologi Malaysia (UTM) for the Research University Grant Scheme (GUP) (vote number: 02G97) that had supported this research.

REFERENCES

[1] M. Alnoukari, "Using Business Intelligence Solutions for Achieving Organization's Strategy : Arab International University Case Study," International Indonesia Journal, vol. Vol. 1, 2009.

[2] E. S. b. Mohamad and I. b. Mohamed, "MyBI: A Business Intelligence application development framework for Malaysian public sector.," In Statistics in Science, Business, and Engineering (ICSSBE), 2012 International Conference on (pp. 1-4). IEEE, 2012.

[3] E. Bonaneau, "Don't Trust Your Gut," Harvard Business Review, vol. 81, pp. 116-123, 2003.

[4] D.-A. Berta, "Business Intelligence in education," in Conference proceedings of "eLearning and Software for Education" (eLSE), 2012, pp. 62-66.

[5] M. Venkatadri, G. S. Hanumat, and G. Manjunath, "A Novel Business Intelligence System Framework.," Universal Journal of Computer Science and Engineering Technology, vol. 1, pp. 112-116, 2010.

[6] L. Molensky, W. Ketter, J. Collins, J. Bloemhof, and H. van de Koppel, "Business intelligence gap analysis: A user, supplier and academic perspective," in Proceedings of the 12th International Conference on Electronic Commerce: Roadmap for the Future of Electronic Business, 2010, pp. 119-128.

[7] M. Muntean, A.-R. Bologa, R. Bologa, and A. Florea, "Business Intelligence Systems in Support of University Strategy," Recent Researches in Educational Technologies., pp. 118-123, 2011.

[8] A. A. Mohamadina, M. R. B. Ghazali, M. R. B. Ibrahim, and M. A. Harbawi, "Business Intelligence: Concepts, Issues and Current Systems," International Conference on Advance Computer Science Applications and Technologies, pp. 234-237, 2012
.

[9] J. Myllarniemi, J. Okkonen, and H. Karkkainen, "Utilizing Business Intelligence Framework For Leveraging Products Lifecycle Management. ," In The 9th International Conference on Electronic Business, Macau., 2009.

[10] A. Mutanga, "A Context-Based Business Intelligence Solution for South African Higher Education," Journal of Industrial and Intelligent Information, vol. 3, 2014.

[11] J. Ranjan, "Business Intelligence : Concepts, Components, Techniques and Benefits," Journal of Theoretical and Applied Information Technology, 2009.

[12] M. Chen, "Applying business intelligence in higher education sector: conceptual models and users acceptance," University Of Bedfordshire, 2012.

[13] D. Guster and G. C. Brown, "The Application of Business Intelligence to Higher Education : Technical and Managerial Perspective," Journal of Information Technology Management, vol. XXIII, 2012.

[14] A. E. Barsky, "Structural Sources of Conflict in a University Context," Conflict Resolution Quarterly, vol. 20, pp. 161-176, 2002.

[15] A. A. Aziz, J. A. Jusoh, H. Hassan, W. M. Rizhan, W. Idris, A. P. M. Zulkifli, *et al.*, "A Framework For Educational Data Warehouse (EDW) Architecture Using Business Intelligence (BI) Technologies," Journal of Theoretical and Applied Information Technology, vol. 69, 2014.

[16] S. Miskon, W. Bandara, G. Gable, and E. Fielt, "Success and Failure Factors of Shared Services : An IS Literature Analysis," Research and Innovation in Information Systems (ICRIIS) 2011 International Conference on (pp. 1-6). IEEE, 2011.

[17] J. E. Cates, S. S. Gill, and N. Zeituny, "The Ladder of Business Intelligence (LOBI): A Framework for Enterprise IT Planning and Architecture," International Journal of Business Information Systems, vol. 1, p. 220, 2005.

[18] Y. Hang and S. Fong, "A Framework of Business Intelligence-Driven Data Mining for E-business," In INC, IMS and IDC, 2009. NCM'09. Fifth International Joint Conference pp. 1964-1970, 2009.

[19] T. Liyang, N. Zhiwei, W. Zhangjun, and W. Li, "A Conceptual Framework for Business Intelligence as a Service (SaaS BI)," pp. 1025-1028, 2011.

[20] H. Baars and H.-G. Kemper, "Management Support with Structured and Unstructured Data—An Integrated Business Intelligence Framework," Information Systems Management, vol. 25, pp. 132-148, 2008.

[21] Z. Papulova, "The Significance of Vision and Mission Development for Enterprises in Slovak Republic," Journal of Economics, Business and Management, vol. 2, 2013.

[22] K. Hinton, E., "A Practical Guide to Strategic Planning in Higher Education," Society for College and University Planning, 2012.

[23] G. Ozdem, "An Analysis of the Mission and Vision Statements on the Strategic Plans of Higher Education Institutions," Educational Sciences: Theory and Practice, vol. 11, pp. 1887-1894, 2011.

[24] B. Muniandy, M. Y. Ong, K. K. Phua, and S. L. Ong, "User acceptance of a key performance indicators monitoring system (kpi-ms) in higher education: An application of the technology acceptance model," in 2nd International Conference on Education and MAnagement Technology, 2011, pp. 179-184.

[25] F. F. Al-Hosaini and S. Sofian, "A review of balanced scorecard framework in higher education institution (HEIs)," International Review of Management and Marketing, vol. 5, pp. 26-35, 2015.

[26] R. Sison and Z. C. Pablo, "Value Chain Framework and Support System for Higher Education," Proceedings of the Philippine Computing Science Congress (PCSC). 2000.

[27] J. A. Jusoh, N. Endot, N. A. Hamid, R. H. R. Bongsu, and R. Muda, "Conceptual Framework of Business Intelligence Analysis in Academic Environment Using Birt," In The International Conference on Informatics and Applications (ICIA2012). The Society of Digital Information and Wireless Communication., pp. 390-396, 2012.

[28] A. Martin, T. M. Lakshmi, and V. P. Venkatesan, "A business intelligence framework for business performance using data mining techniques. ," In Emerging Trends in Science, Engineering and Technology (INCOSET), 2012 International Conference on (pp. 373-380). IEEE., 2012.

[29] D. Kabakchieva, "Business Intelligence Systems for Analyzing University Students Data," Cybernetics and Information Technologies, vol. 15, pp. 104-115, 2015.

[30] E. Micheline and A. Bezerianos, "Annotating BI Visualization Dashboards Needs Challenges," In Proceedings of the SIGCHI Conference on Human Factors in Computing Systems (pp. 1641-1650). ACM. Chicago., 2012.

[31] T. H. Davenport and J. G. Harris, "Competing on Analytics," Competing on analytics: The new science of winning. Harvard Business Press., 2007.

[32] University of Michigan, "MAIS BI Metrics Requirements Gathering Framework," 2009.

[33] M. Sohail, K. Khan, R. Iqbal, and N. Hasany, "Developing Business Intelligence Framework to Automate Data Mapping, Validation and Data Loading from User Application," International Journal of Computer Theory and Engineering, 4(5), 847-850., 2012.

[34] R. Stocker, "The role of business intelligence dashboards in higher education," Credit Control, vol. 33, pp. 37-42, 2012.

[35] Y. Duan, G. Cao, V. Ong, and M. Wolley, "Intelligent Student Engagement Management - Applying Business Intelligence in Higher Education," International Conference on Information and Social Science (ISS), Nagoya, 2013.