VOL. 11, NO. 1, JANUARY 2016 ISSN 1819-6608
ARPN Journal of Engineering and Applied Sciences

www.arpnjournals.com

EFFECT OF SURFACE TEXTURING ON HYDRODYNAMIC PERFORMANCE OF JOURNAL BEARINGS

Shahab Hamdavi, H. H. Ya and T. V. V. L. N. Rao
Department of Mechanical Engineering, Universiti Teknologi PETRONAS, Malaysia
E-Mail: shahab.hamdavi@yahoo.com

ABSTRACT

The request to use hydrodynamic journal bearings in different industries consisting high speed and high load are commonly demanded. The necessary of improving its performance is a significant objective. In this paper, the effect of partially textured surface of hydrodynamic long journal bearing on the pressure distribution and load carrying capacity was studied. Based on governing Reynolds equation, the equations of pressure distribution and load carrying capacity were derived and their trends were represented. The results show that, applying partial surface texture had a positive and remarkable effect on functional characteristics of hydrodynamic journal bearings, i.e. load carrying capacity and lubricant film pressure.

Keywords: surface texture, partial texture, pressure distribution, loads carrying capacity, hydrodynamic journal bearings.

1. INTRODUCTION

Lubrication plays a significant role for disjointed surfaces in order to prepare a smoother relative motion and decline wear and friction. Meanwhile, surface texturing as an important subject can be employed to enhance the hydrodynamic performance of lubrication, so that researchers have done both analytical and experimental studies for last decades. A various number of researchers used different models of surface texturing (dimple model, groove model, sinusoidal model, etc.) to result that the surface texture improves the load carrying capacity as well as pressure distribution and reduces hydrodynamic friction coefficient [1].

Additionally, there are two samples of texture arrangement called parallel and full texturing. Tonder [2] was the first person mentioned "partial texturing", he studied the effect of variable roughness on load support. He found that by presenting a series of dimples or roughness at inlet region of sliding surface, more oil film pressure and load carrying capacity can be achieved. Additionally, he examined the partial texturing approach and his theoretical studies illustrated the helpful effect of applying a number of roughness or dimples on sliding surface. Tauviqirrahman *et al.* [1] were revised the Reynolds equation and made a comparison with a number of surface patterns, i.e. texturing, slip, and combination of them. They revealed that partial texturing consequences to a better enhancement than full texturing. Also, they showed that, for the parallel case, partial texturing in which the texturing covers 0.55 of the contact length, generates significantly more load support than a flat no-slip surface which cannot generate load support. Brizmer et al. [3]pointed out the ability of regular micro-dimples in the form of laser surface texture can provide load support with parallel sliding contact. They investigated the effect of surface texturing on load support. Through a number of numerical simulations, they found that the textured segments, the height ratio, and the bearing length to width ratio are the most important parameters in predicting hydrodynamic load support.

Moreover, some numerical investigation has been done regarding the combination of textured and slip effect. Aurelian *et al.* [4]considered the effect of wall slip over the load support in hydrodynamic fluid bearings. When they investigated a simple textured and wall slip pattern through wall slip condition, found that improper choice of choosing the mixed geometry can lead to a significant decrease in the performance of bearing. The manners of slider bearing with a complex configuration of slip surface were investigated by Wu *et al.* [5, 6]. Their results demonstrated that it can be provided hydrodynamic load support by convergent, parallel and divergent wedge. Pressure distribution of hydrodynamic journal bearing analytically was studied by Sfyris *et al.* [7], the separation of variables method were used in an additive and a group of exact solution of the Reynolds equation. To obtain the exact analytical solution of Reynolds equation they attained a way for the lubrication of finite journal bearings.

All in all, based on the concluded studies, in order to supply the better magnitude for load carrying capacity and the lesser magnitude for friction coefficient, partial texturing is a considerable approach. Furthermore, based on the previous studies [8-12], the texturing has are markable effect on performance characteristics of solely textured and the mutual textured/slippage pattern. Moreover, to enhance load carrying capacity and coefficient of friction, plain surface as well as full texturing are less effective compare with partial texturing.

In the present work, in order to investigate influence of texturing on hydrodynamic performance of fluid film journal bearing, the Reynolds equation was used. First, the

VOL. 11, NO. 1, JANUARY 2016 ISSN 1819-6608
ARPN Journal of Engineering and Applied Sciences

www.arpnjournals.com

equations of oil film pressure based on partially texture configuration of long journal bearing was derived. Then, the trends of pressure distribution for two different textured length $\Theta_t$anddifferent texture depth ratio ($H_g = \frac{h_g}{R-r}$) were represented through figures and tables to analyse the effect of textured surface on the pressure distribution profile and magnitude. Finally, in order to calculate the load carrying capacity, the necessary equation obtained from equation of oil film pressure and the results made clear by employing some figures and tables.

2. METHOD OF ANALYSIS

In this work, in order to calculate more accurate result of dimensionless pressure and load carrying capacity of partially textured hydrodynamic journal bearings, the classical Reynolds equation and Reynolds boundary condition is applied and the numerical process is built-up on the analysis of Rao [13].

A partially textured journal bearing presented through its schematic in Figure-1, represents one groove with no slip surface. The textured length and textured depth are$\Theta_g$andH_g, respectively. To analyse the partially textured hydrodynamic journal bearing, the Reynolds boundary conditions are used. To start, Eqn. (1) revealed thedimensionless film thickness for the classical plain journal bearing. The expression of $H + H_g$is the dimensionless film thickness in the grove area of partially textured journal bearing.

$$H = (1 + n\cos\theta) \quad (1)$$

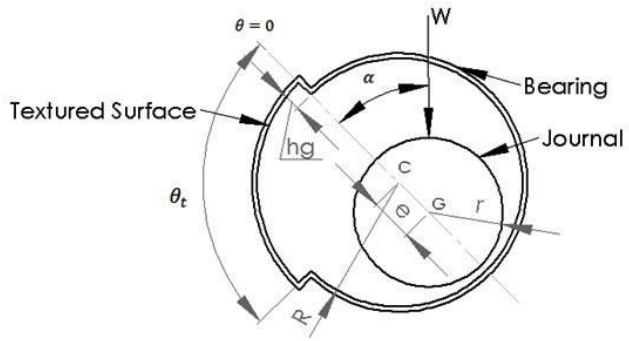

Figure-1. The schematic of partially textured journal bearing.

The dimensionless pressure profile in groove is,

$$P_1(0 \le \Theta \le \theta_t) = P|_{\Theta=0} + 6\int_0^{\Theta_t} \frac{1}{(H+H_g)^2} d\Theta - 12Q\int_0^{\Theta_t} \frac{1}{(H+H_g)^3} d\Theta \quad (2)$$

For smooth (un-textured) outlet area, the boundary condition ($P|_{\Theta=\Theta_t} = P_{\Theta_t}$), yields the dimensionless pressure as

$$P_2(\theta_t \le \theta \le \pi) = P|_{\theta=\theta_t} + 6\int_{\theta_t}^{\pi} \frac{1}{H^2} d\theta - 12Q\int_{\theta_t}^{\pi} \frac{1}{H^3} d\theta \quad (3)$$

The Reynolds boundary conditions we can use for lubricant film are

$$P|_{\theta=\pi} = 0 \quad and \quad \left.\frac{dP}{d\theta}\right|_{\theta=\pi} = 0 \quad (4)$$

To obtain flow volume Q, the boundary condition for dimensionless pressure should substitute Equation (4) into Equation (3) and make it simple by using the dimensionless pressure in Equation (2) and Equation (3).

$$Q = \frac{1}{2}\left[\frac{\int_0^{\theta_t} \frac{1}{(H+H_g)^2} d\theta + \int_{\theta_t}^{\pi} \frac{1}{H^2} d\theta}{\int_0^{\theta_t} \frac{1}{(H+H_g)^3} d\theta + \int_{\theta_t}^{\pi} \frac{1}{H^3} d\theta}\right] \quad (5)$$

The components of dimensionless load carrying capacity are shown in Equation (6)

$$W_n = -\left[\int_0^{\theta_t} P_1 \cos\theta d\theta + \int_{\theta_t}^{\pi} P_2 \cos\theta d\theta\right]$$

$$W_\phi = \int_0^{\theta_t} P_1 \sin\theta d\theta + \int_{\theta_t}^{\pi} P_2 \sin\theta d\theta \quad (6)$$

So, the dimensionless load capacity is

$$W = \sqrt{{W_n}^2 + {W_\phi}^2} \quad (7)$$

3. RESULTS AND DISCUSSION

It appears that surface texturing is an important way to mend the performance of lubricant and successively, the hydrodynamic performance of journal bearing. At this point, the effect of partial texture at the inlet surface of journal bearing can persuadeanextra positive effect on the performance characteristics of journal bearings.

3.1 Effect of partial texture on pressure distribution

Based on reports by other researchers, partial texture has a positive effect on the hydrodynamic performance. Therefore, in the present study, partial texture configuration is the case and the dimensionless pressure distribution is briefly discussed first.

Figure-2(a) and (b), presents the effect of partial texture on oil film pressure. These figures are in respect of circumferential length from 0 to π. Each figure is a combined calculation of pressure distribution at regions of texture and plain surface. In order to demonstrate the difference of pressure profile between texture and plain, eccentricity of n = 0.1 is used.

Figure-2(a), illustrates that how the pressure magnitudes in partially textured configuration is higher than magnitudes in plain surface configuration (Hg = 0). If we consider pressure profile at partially textured configuration at Figures-2(a) and (b), it can be seen that there is not remarkable difference between their magnitudes. However, the difference by increasing the Hg from 0.2 to 0.4 results in increasing the oil film pressure.

The next important item, which should be taken into account, is the behaviour of pressure trend in partially textured configuration. The pressure profile in this configuration has a straight line from where it starts toθ_t, where the partially textured region finishes. This change in magnitudes of oil pressure is better clear in Figure-1(b), where the length of partially textured region is more in comparison to Figure-2(b).

The results of this work is in good agreement by what some other researchers have done [1, 3, 14].

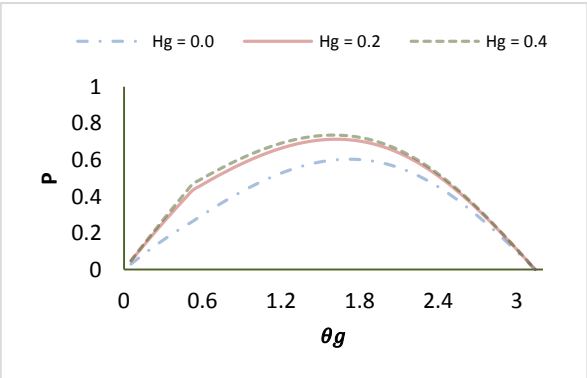

(a)

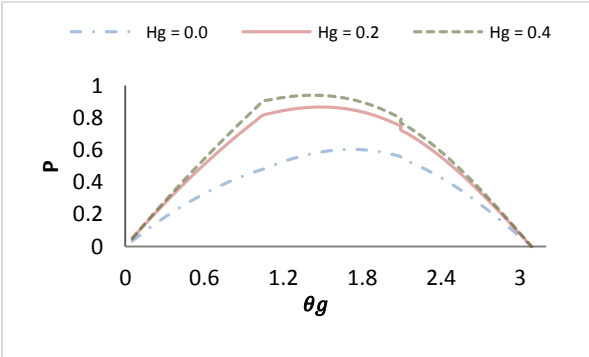

(b)

Figure-2. Dimensionless pressure distribution at (a) $\Theta_t = 30^\circ$ and (b) $\Theta_t = 60^\circ$.

Table-1 and 2, shows the magnitudes of dimensionless of pressure distribution at n = 0.1 and n = 0.2 for two different configuration of plain and partially textured bearing in $\Theta_g = 30^\circ$and $\Theta_g = 60^\circ$, respectively. Based on Table-1, it can be seen that, by applying partial texture on surface of bearing, the magnitude of pressure increases up to somehow two times more at n = 0.1. However, at n = 0.2, this gap declines and the magnitude of Hg = 0.4 shows the lower magnitude in comparison to Hg = 0.2.

From Table-2, we can find the same procedure as well as Table-1 by increasing the length of partially textured region to 60°, but by this difference that, the overall magnitudes for Table-2 are located in higher level than Table-1 So, it can be inferred from the table that, by increasing the length of partially textured region from 30° to 60° we can gain higher magnitudes of oil film pressure. Furthermore, if the magnitude of eccentricity ratio raise from 0.1 to 0.2, the magnitude of oil film pressure increase similarly.

Table-1. Values of pressure at $\Theta_g = 30^\circ$.

Eccentricity ratio	Plain	Partially textured	
n	Hg = 0	Hg = 0.2	Hg = 0.4
0.1	0.2882	0.4560	0.4897
0.2	0.5089	0.5656	0.5495

Table-2. Values of pressure at $\Theta_g = 60^\circ$.

Eccentricity ratio	Plain	Partially textured	
n	Hg = 0	Hg = 0.2	Hg = 0.4
0.1	0.4806	0.8159	0.9025
0.2	0.8839	1.02478	1.0097

3.2 Effect of partial texture on load carrying capacity

In this subdivision, based on equations used for calculation of oil film pressure, load carrying capacity also can be accomplished. The figures in this part reveal the magnitude of dimensionless load carrying capacity in respect to textured depth (Hg).

Each line indicates the trend of change in magnitude of load capacity in different eccentricity ratio (n). Figure-3(a) represents this changes when$\Theta_t = 30^\circ$ and Figure-3(b) shows them when$\Theta_t = 60^\circ$. From Figure-3(a) and (b), it can be seen that, by increasing the depth of texture at each eccentricity ratio, the magnitude of load capacity increase. Similarly, this happens for another eccentricity ratios.

The most important result that can be inferred from these figures is, by increasing the length of partially textured region from 30° to 60°, the magnitude of load capacity will increase.

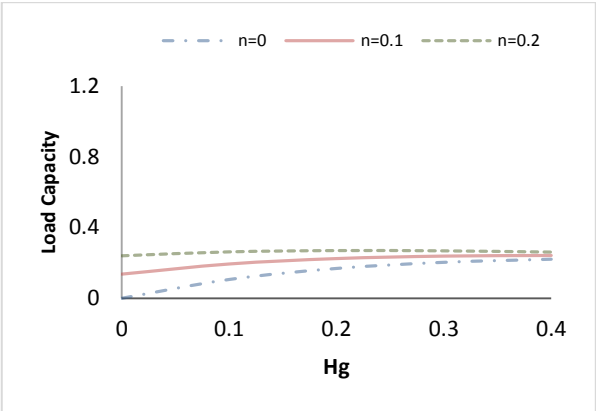

(a)

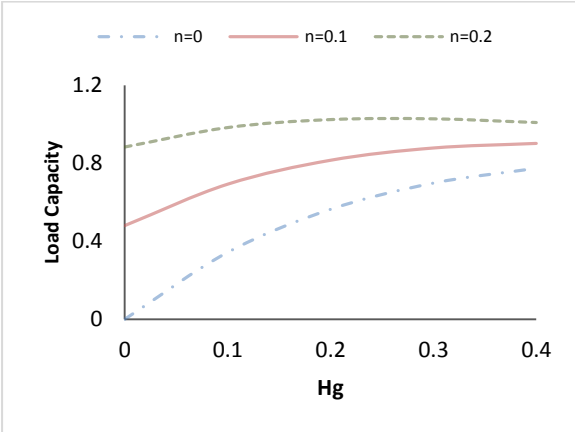

(b)

Figure-3. Dimensionless load carrying capacity at (a) $\Theta_t = 30^\circ$ and (b) $\Theta_t = 60^\circ$.

For more detail in how the magnitudes of load carrying capacity changes, it can be referred to below tables. As well as Table-1 and 2, Table-3 and 4 represents the same raise in magnitudes but here for load capacity.

Table-3. Values of load capacity at $\Theta_g = 30^\circ$.

Eccentricity ratio	Plain	Partially textured	
n	Hg = 0	Hg = 0.2	Hg = 0.4
0.1	0.1365	0.2246	0.2422
0.2	0.2403	0.2699	0.2614

Table-4. Values of load capacity at $\Theta_g = 60^\circ$.

Eccentricity ratio	Plain	Partially textured	
n	Hg = 0	Hg = 0.2	Hg = 0.4
0.1	0.4805	0.8158	0.9023
0.2	0.8837	1.0245	1.0094

4. CONCLUSIONS

The present study investigate the effect of partially textured region on the improvement of load capacity and pressure distribution for partially textured journal bearing and compares them with plain journal bearing. The conclusions based on the analysis presented in this paper are:

- Oil film pressure was calculated to investigate the influence of partial textured surface on the pressure

distribution of journal bearing. Also, a comparison between partial textured and plain surface of journal bearing showed. Subsequently, the results revealed, the positive effect and a significant improvement achieved for oil film pressure at n = 0.1 and n = 0.2 considering two textured angle length $\theta_g = 30^\circ$ and$\theta_g = 60^\circ$.

- In order to gain load carrying capacity, the result of pressure were used. The results of load capacity studied and found that by applying partial texture on the surface of journal bearing capability of the journal bearing system enhance.

ACKNOWLEDGEMENT

The authors would like to acknowledge UniversitiTeknologi PETRONAS, Malaysia for the financial support.

REFERENCES

[1] Tauviqirrahman, M., *et al*. 2013. A study of surface texturing and boundary slip on improving the load support of lubricated parallel sliding contacts. Acta mechanica. 224(2): 365-381.

[2] Tonder, K.. 2001. Inlet roughness tribodevices dynamic coefficients and leakage. Tribology International. 34: 847–852.

[3] Brizmer, V. and Y. Kligerman. 2012. A laser surface textured journal bearing. Journal of Tribology. 134(3): 031702.

[4] Aurelian, F., M. Patrick, and H. Mohamed. 2011. Wall slip effects in (elasto) hydrodynamic journal bearings. Tribology International. 44(7-8): 868-877.

[5] Pascovici, M., *et al*. 2009. Analytical investigation of a partially textured parallel slider. Proceedings of the Institution of Mechanical Engineers, Part J: Journal of Engineering Tribology. 223(2): 151-158.

[6] Wu, C.W., *et al.* 2006. Low Friction and High Load Support Capacity of Slider Bearing With a Mixed Slip Surface. Journal of Tribology. 128(4): p. 904.

[7] Sfyris, D. and A. Chasalevris. 2012. An exact analytical solution of the Reynolds equation for the finite journal bearing lubrication. Tribology International. 55: p. 46-58.

[8] Tala-Ighil, N. and M. Fillon. 2015. A numerical investigation of both thermal and texturing surface effects on the journal bearings static characteristics. Tribology International. 90: 228-239.

[9] Tala-Ighil, N., M. Fillon and P. Maspeyrot. 2011. Effect of textured area on the performances of a hydrodynamic journal bearing. Tribology International. 44(3): p. 211-219.

[10] Etsion, I., *et al*. 2003. Experimental investigation of laser surface textured parallel thrust bearings. Tribology Letters. 17(02).

[11] Kovalchenko, A., *et al*. 2005. The effect of laser surface texturing on transitions in lubrication regimes during unidirectional sliding contact. Tribology International. 38(3): 219-225.

[12] Marian, V.G., *et al*. 2011. Theoretical and Experimental Analysis of a Laser Textured Thrust Bearing. Tribology Letters. 44(3): 335-343.

[13] Rao, T., *et al*. 2012. Analysis of slider and journal bearing using partially textured slip surface. Tribology International. 56: 121-128.

[14] Tauviqirrahman, M., *et al*. 2013. Combined effect of texturing and boundary slippage in lubricated sliding contacts. Tribology international. 2013. 66: p. 274-281.