VOL. 11, NO. 2, JANUARY 2016 ISSN 1819-6608
ARPN Journal of Engineering and Applied Sciences

www.arpnjournals.com

HARDWARE-IN-THE-LOOP SIMULATION AND DIGITAL CONTROL OF DOUBLE INVERTED PENDULUM

Germán Darío Buitrago Salazar, Darío Amaya Hurtado and Olga Ramos Sandoval
Nueva Granada Military University, Bogotá D.C., Colombia, United States of America
E-Mail: gedabusa@gmail.com

ABSTRACT

The popularity that control systems have gained at industrial level, has triggered the use of new technologies to simulate industrial processes in laboratories, without having a station with the plant to control. This paper presents the modeling of an inverted double pendulum and, subsequent emulation and control using Hardware-In-The-Loop. To being able to accomplish the previous, first the mathematical model of the plant was obtained from the method of Euler-Lagrange differential equations. The model was then discretized with a sampling time of 0.2 s and programmed into an embedded device. Within a user interface developed in C#, a discretized LQR controller was programmed acting on the embedded system, through a serial communication protocol. Furthermore, this interface monitors the output signals. The obtained results demonstrate the advantages of using such tools, since a plant can be controlled in real time, without having it physically made.

Keywords: hardware in-the-loop, LQR controller, double inverted pendulum, emulation, control.

INTRODUCTION

When a stage of production is developed and implemented on an industrial level, it is necessary to include control stages, with the aim of improving the process and make it work in an appropriate manner. For this purpose, new alternatives have been proposed to simulate every model of the process before being manufactured, without the need of physical plant. Hardware-In-The-Loop (HIL) is one of these advanced alternatives, where the mathematical model of the plant is embedded within an electronic device, in order to emulate the behavior of the system.

Researchers that have worked on this issues, have developed different HIL applications, to make it possible to interact and modify elements that proposed plants must have, and thus to function properly to stimuli that occur within its operation. An example of HIL applications is presented in [1], where a system of wind tunnels with 6 degrees of freedom was represented, in order to test it and improve it, before moving on to the manufacturing stage. Another application of HIL in the designing field is the validation of combustion engines models, with the aim of increasing energy efficiency by varying the physical and geometric properties of the piston-crank elements set [2]. This applications rely on simulation tools and software control, which lead to decreases in time and development costs, as well as making system changes available in real time.

Movement mechanisms with a high degree of complexity, due to the number of variables and forces interacting on the system have also been simulated with this technique. The model of a vehicle on a railway line was emulated with HIL, for validation of the brake and traction systems, when subjected to conditions and disturbances that disrupt the suitable operation of the railway vehicle [3]. These works have also been replicated for the emulation of vibrational effects in mechanical manufacturing processes at stages that require drilling [4]. Likewise, in the area of robotics, it has been replicated for the concurrent design of robot manipulators, simulating the position of the joints and their response to positional control signals [5].

All these results are proof of the versatility that HIL offers in the implementation and emulation of plants. Reason why, this alternative to control nonlinear systems like double inverted pendulum, whose physical mechanism is difficult to build, was chosen. Among the papers found with this system, publications from [6] and [7] can be highlighted, where they control the angular and spatial position of the bars and mobile, on which is supported, with a LQR controller. In the same way, classic control systems along with neural networks have been used for estimate the controller gains and achieve the stabilization of the system [8]. Another example is the work performed in [9], where concepts related to artificial intelligence were used for controlling a similar system, achieving a real-time control, with more robustness and stability than using conventional methods.

The physical structure of the pendulums could generate a big trouble for the tests of the control systems, because the elaboration of the plant is more complicated than others, and any variation in this, can cause forces that disturb the right performance of the system. For this reason is necessary to develop emulated models, where the components of the physical plant can be changed before the assembly.

Taking into account the previous statements, in this document the emulation and control of a double inverted pendulum using HIL was developed, with the aim of observing in real-time the behavior of the plant, without a physical mechanism. This work has four sections. In the second section, the mathematical model is presented,

showing the assumed variables and constants for its design, simulation on MATLAB and the discretization by the zero-order hold method. In the third section, the results with the embedded model in the development board are presented, and finally in the fourth section are showed the obtained conclusions.

METHODOLOGY

According to the works shown in the previous literature, is possible to use non-linear models, composed by a high number of variables that relate each one of plant states, using HIL. The double inverted pendulum is a dynamic system that has been studied many times; this system has two degrees of freedom and is made of two bars joined together by one of its ends using a pivot as is depicted in the Figure-1. The movements performed by the bars, which are of length "l" and mass "m", must be set by using a control system for achieve the stabilization of them in a vertical position, with a theta angle equal to zero respect to the perpendicular axis taking as a reference the surface.

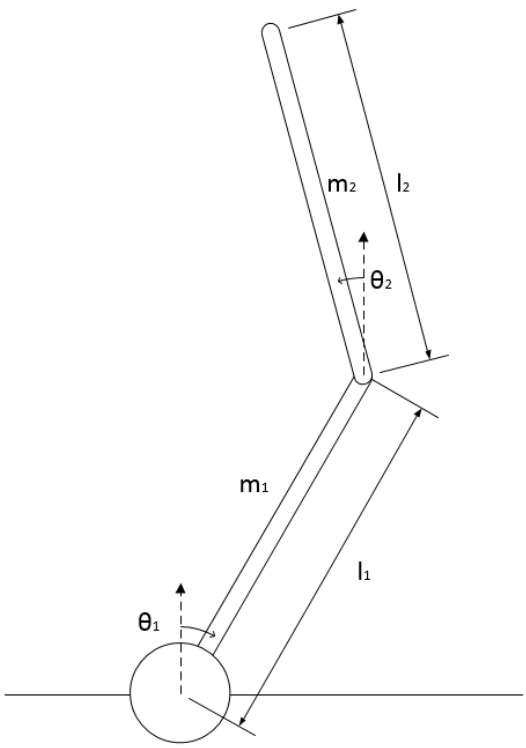

Figure-1. Double inverted pendulum.

Based on the Euler-Lagrange method, the Power P was related to the Kinetic Energy T of the system. According to the Figure-1, P and T are denoted as:

$$P=\sum_{i=1}^{n} m_i g y_i = m_1 g[-l_1 \cos(\theta_1)] - m_2 g[l_1 \cos(\theta_1) + l_2 \cos(\theta_2)] \quad (1)$$

$$T=\sum_{i=1}^{n}\frac{1}{2}mv^2=\frac{1}{2}m_1 l_1^2\dot{\theta}_1^2\left[\sin^2\theta_1+\cos^2\theta_1\right] + \frac{1}{2}m_2\left(l_1\dot{\theta}_1\cos\theta_1+l_2\dot{\theta}_2\cos\theta_2\right)^2 + \frac{1}{2}m_2\left(l_1\dot{\theta}_1\sin\theta_1+l_2\dot{\theta}_2\sin\theta_2\right)^2 \quad (2)$$

Where g is the gravity that affects the system, when the Lagrangian function is implemented for estimating the mathematical model of the different functions, is necessary to relate the energies of the system according the equation (3) in first place, then the final model is obtained from de partial derivatives of L respect to each one of the DOF, as is illustrated in (4).

$$L=T-P \quad (3)$$

$$\frac{d}{dt}\left(\frac{dL}{d\dot{\theta}_i}\right)-\frac{dL}{d\theta_i}=0 \quad (4)$$

According to this, the double inverted pendulum model is:

$$\frac{d}{dt}\left(\frac{dL}{d\dot{\theta}_1}\right)-\frac{dL}{d\theta_1}=\ddot{\theta}_1 l_1^2(m_1+m_2)+\ddot{\theta}_2 m_2 l_1 l_2\cos(\theta_2-\theta_1) - \dot{\theta}_2^2 m_2 l_1 l_2\sin(\theta_2-\theta_1)+(m_1+m_2)g l_1\sin(\theta_1)=0 \quad (5)$$

$$\frac{d}{dt}\left(\frac{dL}{d\dot{\theta}_2}\right)-\frac{dL}{d\theta_2}=\ddot{\theta}_1 m_2 l_1 l_2\cos(\theta_2-\theta_1) + \ddot{\theta}_2 m_2 l_2+\dot{\theta}_1^2 m_2 l_1 l_2\sin(\theta_2-\theta_1)+m_2 g l_2\sin(\theta_2)=0 \quad (6)$$

As it can be appreciated in the above equations, this model is represented by nonlinear functions. Considering the system's point of equilibrium as the vertical position facing upwards, is assumed that $\theta_1=\theta_2=\dot{\theta}_1=\dot{\theta}_2=0$, $\sin\theta_1=\varphi_1$, $\sin\theta_2=\varphi_2$, $\sin(\theta_2-\theta_1)=\varphi_2-\varphi_1$, $\cos\theta_1=\cos\theta_2=\cos(\theta_2-\theta_1)=1$.

Linearizing over this point, the model is represented as:

$$\begin{cases}\dot{\theta}_1=\omega_1\\ \dot{\theta}_2=\omega_2\\ \dot{\omega}_1=\dfrac{a_1a_5\varphi_2-a_3a_4\varphi_1}{a_1^2+a_2}\\ \dot{\omega}_2=\dfrac{a_2a_5\varphi_2-a_1a_4\varphi_1}{a_1-a_2a_3}\end{cases} \quad (7)$$

Where ω_i is the angular velocity of pendulum *i* and

$$\begin{cases} a_1=m_2 l_1 l_2 \\ a_2=(m_1+m_2)l_1^2 \\ a_3=m_2 l_2^2 \\ a_4=(m_1+m_2)g l_1 \\ a_5=l_2 m_2 g \end{cases}$$

After the linearization process, is estimated the representation in time-dependent state variables. Replacing the algebraic constants of the system with the numeric values summarized in Table 1, the system used and controlled for this work is represented by the equations (8) and (9).

Table-1. Parameter of system.

Physical variable	Value	Units
Pendulum mass 1 (m_1)	0.5	[Kg]
Pendulum mass 2(m_2)	0.3	[Kg]
Pendulum length 1 (l_1)	0.3	[m]
Pendulum length 2 (l_2)	0.2	[m]
Gravitational acceleration (g)	9.81	$\left[\frac{Kg*m}{s^2}\right]$

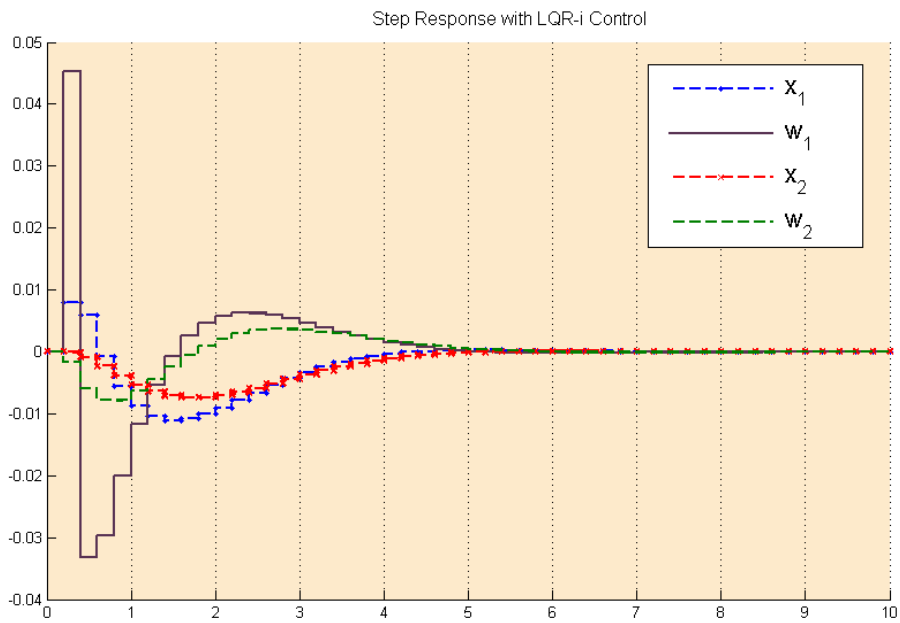

Figure-2. Discrete time simulation of the controlled double inverted pendulum system.

$$\frac{d}{dt}\begin{bmatrix}\theta_1\\ \omega_1\\ \theta_2\\ \omega_2\end{bmatrix}=\begin{bmatrix}0 & 1 & 0 & 0\\ -03.3906 & 0 & 0.1465 & 0\\ 0 & 0 & 0 & 1\\ -2.4731 & 0 & 2.4731 & 0\end{bmatrix}\begin{bmatrix}\theta_1\\ \omega_1\\ \theta_2\\ \omega_2\end{bmatrix}+\begin{bmatrix}0\\1\\0\\0\end{bmatrix}u(t) \quad (8)$$

$$\begin{bmatrix}\theta_1\\ \theta_2\end{bmatrix}=\begin{bmatrix}1 & 0 & 0 & 0\\ 0 & 0 & 1 & 0\end{bmatrix}\begin{bmatrix}\theta_1\\ \omega_1\\ \theta_2\\ \omega_2\end{bmatrix} \quad (9)$$

It is important to observe that this model cannot program in continuous time inside the embedded system. For this reason, it is necessary to discretize the continuous model of the double inverted pendulum system with the Z transformed using the method of zero-order hold (ZOH), as a consequence of its implementation and similarity in its discrete time response compared with the obtained in continuous time. Thus, a sampling time of 0.2 s is used due to the processing speed of the embedded system. Subsequently, the state equations are discretized, obtaining the equations (10) and (11).

$$\begin{bmatrix}\theta_1[k+1]\\ \omega_1[k+1]\\ \theta_2[k+1]\\ \omega_2[k+1]\end{bmatrix}=$$

$$\begin{bmatrix}0.9922 & 0.1995 & 0.00295 & 1.961\text{x}10^{-4}\\ -0.0784 & 0.9922 & 0.0297 & 0.00295\\ -0.0498 & -0.00331 & 1.05 & 0.2033\\ -0.5015 & -0.04981 & 0.5023 & 1.05\end{bmatrix}* \quad (10)$$

$$\begin{bmatrix}\theta_1[k]\\ \omega_1[k]\\ \theta_2[k]\\ \omega_2[k]\end{bmatrix}+\begin{bmatrix}0.01997\\ 0.1995\\ -0.0001653\\ -0.003311\end{bmatrix}u[k]$$

$$\begin{bmatrix}\theta_1[k]\\ \theta_2[k]\end{bmatrix}=\begin{bmatrix}1 & 0 & 0 & 0\\ 0 & 0 & 1 & 0\end{bmatrix}\begin{bmatrix}\theta_1[k]\\ \omega_1[k]\\ \theta_2[k]\\ \omega_2[k]\end{bmatrix} \quad (11)$$

Secondly, a control strategy with a state variables feedback was implemented by the design of a controller using the root locus (LQR) method, in order to locating the system poles in closed loop and controlling the angular position of both pendulums. Additionally, the control system must have an integral compensator, which eliminates the positional error of the system. Furthermore, using the expanded expression arrays of the state variables [10], which can be observed in equation (12), the symmetric matrices "Q" and "R" were proposed with the aim of estimate the feedback constants "K" of the system.

Figure-2 presents the results of the controlled system using a step input, where it can be visualized that the system outputs are asymptotic to zero.

RESULTS

Initially, for the purpose of emulate the model in real time, it is necessary to obtain the difference equations from both of the transfer functions. Then, these equations are programed in an embedded system, by setting the interrupts and the operating frequency of the device, according to the specifications presented in [11]. Moreover, a user interface was programmed in C # with the difference equations of the controller in order to monitoring the output of the plant, estimating the transmitted control signal and setting the reference signal of the system.

In Figure-3, the output of the embedded system ADC converter is shown, with the system response to a step input. It can be visualized a sub damped response where both angles θ_1 and θ_2 converge asymptotically to zero, with a stabilization period of 4.5 seconds. Comparing the response of the embedded system with a MATLAB simulation is observable that both of them are similar. Additionally, if the controller would be tested in a physical plant the response of it would be the same, showing that the actual model and the embedded one work in the same way.

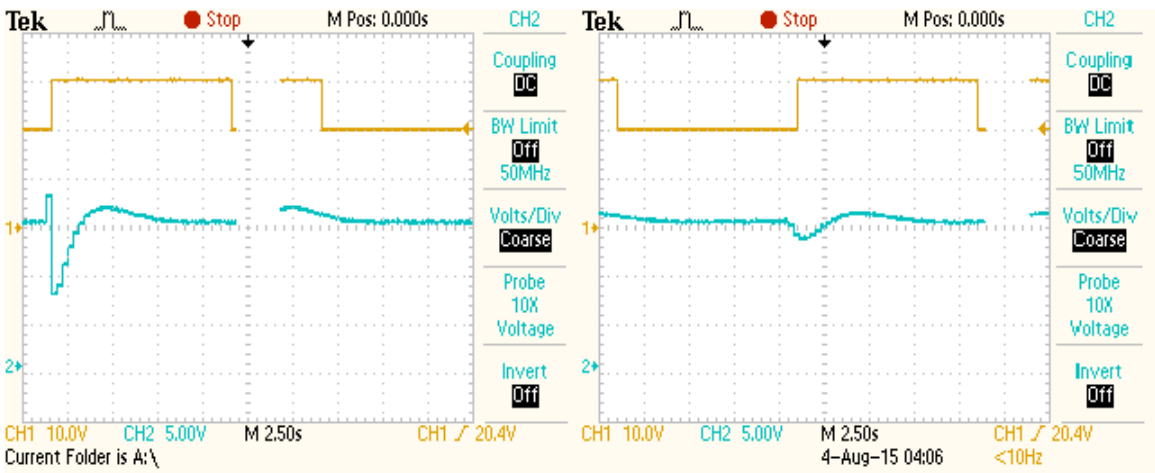

Figure-3. Output of system (θ_1, θ_2).

CONCLUSIONS

In this paper were presented the mathematical model, the control system design, the simulation and emulation of a double inverted pendulum using a Hardware-in-the-loop configuration. The simulation results show that the obtained response of the embedded mathematical model is very similar to the results obtained with physical models of the plant. This is a demonstration that the features and versatility of embedded systems are a good choice to perform emulations of complex systems when is not possible to build physical structures nor use them on laboratory spaces.

In the same way, the implementation of the LQR method to control non-linear systems proved to have a desired performance for the requirements of this work. The arrays used by this method, facilitate the correct design of an optimal controller, to ensure the control parameters which stabilize the desired plant, regardless of the input value and perturbations that may occur. Despite of the acceptable results of the controller response, as complement of the system controller, is possible to use artificial intelligence algorithms, to optimize the response, with less error.

ACKNOWLEDGEMENT

The authors would like to thank the research center from the Military University Nueva Granada, to support the project with the corresponding materials and equipment as well as the installations to perform this research project and it's financing.

REFERENCES

[1] H. Giberti and F. Davide. 2015. A novel hardware-in-the-loop device for floating offshore wind turbines and sailing boats. Mechanism and Machine Theory. 85: 82-105.

[2] P. Casoli, A. Gambarotta, N. Pompini, U. Caiazzo, E. Lanfranco and A. Palmisano. 2014. Deveploment and Validation of a "Crank-angle" model of an automotive turbocharged engine for HIL Applications. Energy Procedia. 45: 839-848.

[3] B. Allota, R. Conti, E. Meli, L. Pugi and A. Ridolfi. 2013. Development of a HIL railway roller rig model for the traction and braking testing activities under degraded adhesion conditions. International Journal of Non-Linear Mechanics. 57: 50-64.

[4] K. Kalinki and M. Galewski. 2014. Vibration surveillance supported by Hardware-In-the-Loop Simulation in milling flexible workpieces. Mechatronics. 24(8): 1071-1082.

[5] R. Chhabra and M. Reza-Emami. 2013. A holistic concurrent design approach to robotics using hardware-in-the-loop simulation. Mechatronics. 23(3): 335-345.

[6] M. Nalavade, M. Bhagat and V. Patil. 2014. Balancing double inverted pendulum on a cart by linearization technique. International Journal of Recent Technology and Engineering. 3(1): 153-157.

[7] S. Yadav, S. Sharma and N. Singh. 2012. Optimal Control of Double Inverted Pendulum using LQR Controller. International Journal of Advanced Research in Computer Science and Software Engineering. 2(2): 189-192.

[8] A. Bogdanov. 2004. Optimal control of a double inverted pendulum on a cart. CSEE, OGI School of Science and Engineering, OHSU, pp: 1-14.

[9] S. Zhang, Z. Zhang, K. Jin and C. Yang. 2012. Fuzzy control of double inverted pendulum by using state varieties fusion function. 24th Chinese Control and Decision Conference, May, 23-25, Taiyuan, China, pp: 2696-2699.

[10] F. Reis, R. Torrico-Bascope and M. Costa. 2011. LQR control with integral action applied to a high gain step-up DC-DC converter. 2011 Brazilian Power Electronics Conference (COBEP), Sept., 11-15, Praimar, Brazil. pp: 256-261.

[11] N. Ulloa. 2013. Control por hardware de sistemas de gobierno para diodos láser con STM32F4 y celdas Peltier. Universidad de Costa Rica, San José.