VOL. 11, NO. 2, JANUARY 2016 ISSN 1819-6608
ARPN Journal of Engineering and Applied Sciences

www.arpnjournals.com

DESIGN AND ANALYSIS OF DYNAMIC ELECTROMAGNETIC SUSPENSION SYSTEM FOR IMPROVED VEHICLE STABILITY

M. Suresh[1] Walter Karg R[2] R. Rohith Renish[3] and Viraal Nemani[2]
[1]Department of Mechanical Engineering, Karunya University, Coimbatore, Tamilnadu, India
[2]U.G. Scholars, Karunya University Department of Mechanical Engineering, Karunya University, Coimbatore, Tamilnadu, India
[3]Department of Mechanical Engineering, Vel Tech University, Chennai, India

ABSTRACT

Introducing a new technology 'Electromagnetic suspension system' which works on the principle of 'Faraday's law of Induction'. It replaces the hydraulic and air suspensions. Here we bring in the use of electromagnets to push/pull the wheel in and out of a dip without jostling of the car body that will result in easy and safe driving. This system consists of two electromagnets placed inside the cylinder. One of the electromagnet that is placed in the top end of the cylinder is fixed and the other placed in the bottom end of the cylinder is movable. A rheostat that is used for varying resistance is used here. The main purpose of the rheostat is that it could vary current. There is an additional fitting done to the movable end of the rheostat. A strong spring has to be attached to the movable end of the rheostat so that it could come back to its original position. A rod is attached from the jockey of the rheostat to the axle of the wheel. This rod will help the rheostat to vary the current. So when the current is passed to the electromagnets, there will be a repulsive force between them and so whenever there is an upward force acting on the wheel the current has to decrease so that the wheel alone will move up and down. This is the purpose why we prefer rheostat. The rod connected to it will vary and then come back to its original position. EMF is defined as the energy available per unit charge that travels once around the wire loop. Equivalently, it is the voltage that would be measured by cutting the wire to create an open circuit, and attaching a voltmeter to the leads. The maximum stress obtained after analyzing the electromagnetic suspension is 130.307 N/mm.^{2}

Keywords: active suspension, faraday's law, rheostat and ride characteristics.

INTRODUCTION

Suspension is the term given to the system of springs, shock absorbers and linkages that connects a vehicle to its wheels. Suspension systems serve a dual purpose – contributing to the car's road holding/handling and breaking for good active safety and driving pleasure, and keeping vehicle occupants comfortable and reasonably well isolated from road noise, bumps, vibrations, etc. These goals are generally at odds, so the tuning of suspensions involves finding the right compromise [1].

The spring rate (or suspension rate) is a component in setting the vehicle's ride height or its location in the suspension stroke. Vehicles which carry heavy loads will often have heavier springs to compensate for the additional weight that would otherwise collapse a vehicle to the bottom of its travel (stroke). Heavier springs are also used in performance applications where the loading conditions experienced are more extreme [2]. Magneto rheological (MR) fluid, which is capable of controlling the stopping process of moving objects, e.g. on transportation lines. The proposed solution makes it possible to adjust the braking force (by electronic controller) to the kinetic energy of the moving object. The paper presents an overview of passive shock absorbers. Next, the design concept of a semi- active shock absorber with the MR fluid is proposed.

Compared to conventional electro rheological solutions, MR devices are stronger and can be operated directly from low-voltage power supplies this is why MR fluid is much more often used. Design And Modeling of a Magnetic Shock Absorber Based on Eddy Current Damping Effect, is studied the newly developed analytical model is used to design high-performance dampers for a variety of applications. The effectiveness of highly non-linear, frequency, amplitude and magnetic field dependent magneto-sensitive natural rubber components applied in a vibration isolation system is experimentally investigated by measuring the energy flow into the foundation. The vibration isolation system in this study consist s of a solid aluminum mass supported on four magneto- sensitive rubber components and is excited by an electro-dynamic shaker while applying various excitation signals, amplitudes and positions in the frequency range of 20–200 Hz and using magneto sensitive components at zero-field and at magnetic saturation. The energy flow through the magneto-sensitive rubber isolators is directly measured by inserting a force transducer below each isolator and an accelerometer on the foundation close to each isolator.

Active electromagnetic suspension systems can maintain the required stability and comfort due to the ability of adaptation in correspondence with the state of the vehicle. Specifications are drawn from on-and off road measurements on a passive suspension system, and it can be concluded that, for ARC, a peak force of 4kN and an RMS force of 2kN (dutycycleof100%) are necessary for th front actuators. Furthermore, the necessary peak damping power is around 2kW; however, the RMS damping power is only 16W during normal city driving. The maximum bound and rebound strokes are 80 and 58mm, respectively. The on road measurements, which are mimicked on a

quarter car setup by means of electromagnetic actuation, a good tracking response, and measurement of the frequency response of the tubular actuator, prove the dynamic performance of the electromagnetic suspension system [3-6].

MODERN SUSPENSION SYSTEM

When people think of automobile performance, they normally think of horsepower, torque and zero-to-60 acceleration. But all of the power generated by a piston engine is useless if the driver can't control the car. That's why automobile engineers turned their attention to the suspension system almost as soon as they had mastered the four-stroke internal combustion engine [7-9].

The job of a car suspension is to maximize the friction between the tires and the road surface, to provide steering stability with good handling and to ensure the comfort of the passengers

If a road were perfectly flat, with no irregularities, suspensions wouldn't be necessary. But roads are far from flat. It's these imperfections that apply forces to the wheels. According to Newton's laws of motion, all forces have both magnitude and direction. A bump in the road causes the wheel to move up and down perpendicular to the road surface. The magnitude, of course, depends on whether the wheel is striking a giant bump or a tiny speck. Either way, the car wheel experiences a vertical acceleration as it passes over an imperfection [10-11].

- **Handling** - a car's ability to safely accelerate, brake and corner.

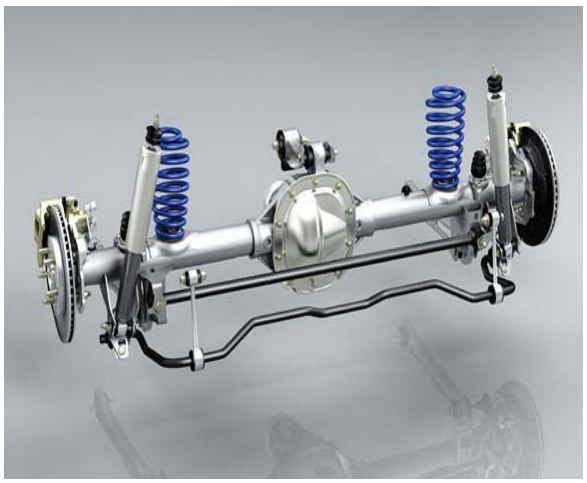

These two characteristics can be further described in three important principles - road isolation, road holding and cornering.

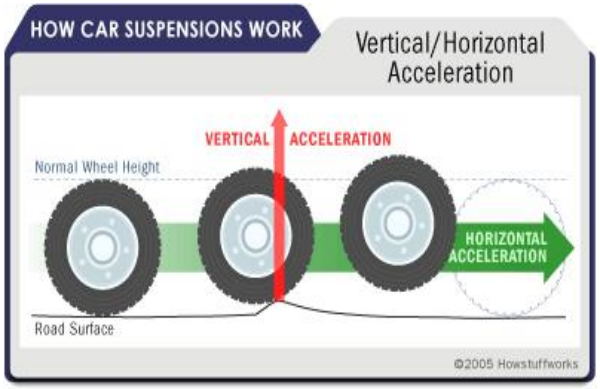

What you need is a system that will absorb the energy of the vertically accelerated wheel, allowing the frame and body to ride undisturbed while the wheels follow bumps in the road. Most automobile engineers consider the dynamics of a moving car from two perspectives:

- **Ride** - a car's ability to smooth out a bumpy road.

BOSE SUSPENSION SYSTEM

The Bose system uses a linear electromagnetic motor (L.E.M.) at each wheel, in lieu of a conventional shock and spring setup. The L.E.M. has the ability to extend (as if into a pothole) and retract (as if over a bump) with much greater speed than a fluid damper (taking just milliseconds). These lightning-fast reflexes and precise movement allow the wheel's motion to be so finely controlled that the body of the car remains level, regardless of the goings-on at the wheel level [12-13].

A power amplifier supplies the juice to the L.E.M.s. The amplifier is a regenerative design that uses the compression force to send power back through the amplifier. Thanks to this efficient layout, the Bose suspension uses only about a third of the power of a vehicle's air conditioning system. There are a few other key components in the system, such as control algorithms that Bose and his fellow brainiacs developed over a few decades of crunching numbers [14-16].

The Bose suspension system installs easily into the front of the vehicle. Bose's front suspension modules use a modified Mac Pherson strut layout and the rear suspension modules use a double-wishbone linkage to attach a linear electromagnetic motor between the vehicle body and each wheel. Unlike conventional dampers, which transmit vibrations to the vehicle occupants and sacrifice comfort, the wheel damper in the Bose system operates without pushing against the car body, maintaining passenger comfort.

ARPN Journal of Engineering and Applied Sciences

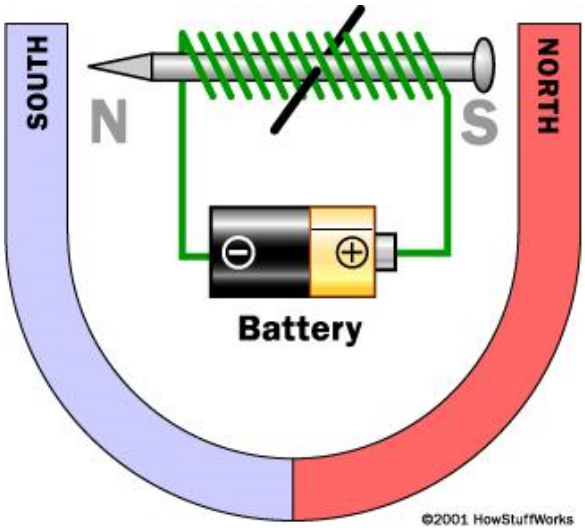

Force between Electromagnets

F=μ0m1m2/ (3.14r^2)

Where, F = Force exerted by magnetic field

μ0 = Permeability of free space (or air)

m1 = Pole strength of the electromagnet, 1

m2 = Pole strength of the electromagnet, 2

THEORIES BEHIND ELECTROMAGNETIC SUSPENSION SYSTEM

ELECTROMAGNETS

r = Distance between the poles of two electromagnets.

ELECTRO MOTIVE FORCE

- An electromagnet is a type of magnet in which the magnetic field is produced by the flow of electric current.
- Unlike a permanent magnet, the strength of an electromagnet can easily be changed by changing the amount of electric current that flows through it.
- The magnetic field disappears when the current is turned off.

The magnetic force (q v × B) component of the Lorentz force is responsible for motional electromotive force (or motional EMF), the phenomenon underlying many electrical generators. When a conductor is moved through a magnetic field, the magnetic force tries to push electrons through the wire, and this creates the EMF. The term "motional EMF" is applied to this phenomenon, since the EMF is due to the motion of the wire.

RHEOSTAT

A rheostat is an electrical component that has an adjustable resistance. It is a type of potentiometer that has two terminals instead of three.

ELECTROMAGNETIC SUSPENSION SYSTEM - EXPERIMENTAL SETUP

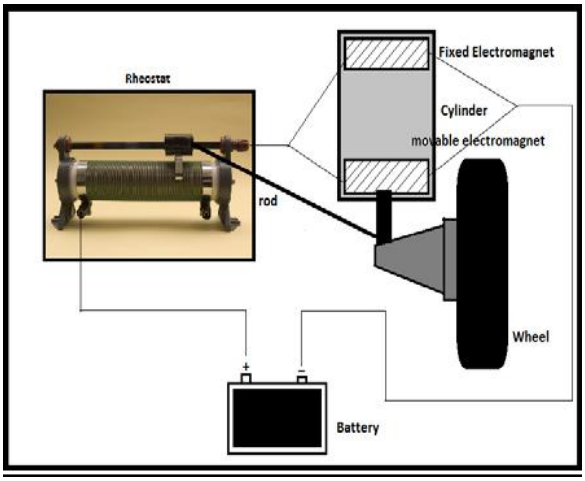

DESCRIPTION

Electromagnetic suspension consists of a cylinder where it consists of a fixed electromagnet and a movable one. The fixed electromagnet is placed on top of the cylinder whereas the movable electromagnet is placed at the bottom of the cylinder. The movable electromagnet is connected by a rod to the axle of the wheel. The electromagnets are connected to the battery through a rheostat. The rheostat is attached to the chasis. The rheostat is used so that it could vary the current as required. As the resistance increases the current decreases and vice versa. There will be a spring attatched to the movable end of the rheostat so that it could come back to its original position. There is a rod that connects the movable end of the rheostat and the axle of the wheel. So when there is an upward force acting on the wheel, the rod attached to the axle connected to the rheostat varies the resistance, thereby varying the current and controlling the repulsive force between the electromagnets. Thus the movable electromagnet will move up and down causing the wheel to move in and out of the dip within its clearance and no jostling the car body.

WORKING

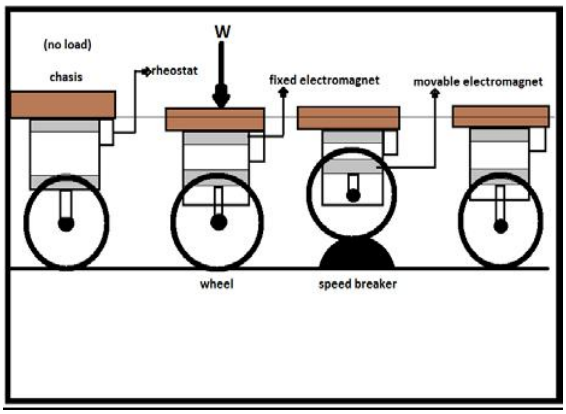

- Now let us consider a speed breaker coming ahead and when the wheel reaches the speed breaker there will be upward force acting on the wheel.
- A rod attached to the movable end of the rheostat will increase the resistance that is inversely proportional to the current hence resulting in decrease of current supply to the electromagnets.
- If the current decreases, the repulsion force between the electromagnets also will decrease.
- In this way the wheel moves in and out of a dip without jostling of the car body**.**

FEATURES

Some of the main features of electromagnetic suspensions are:

- It prevents the road shocks from being transmitted to the vehicle parts, thereby providing suitable riding and cushioning effect to the occupants.
- Keeps the vehicle stable while in motion by providing good road holding during driving, cornering and braking?
- Provides safe vehicle control and free of irritating vibrations and reduce wear and tear.
- Easy to design and modify the design (if according to any automobile's specifications.
- It provides you the maximum safety and comfort ability when compared to the other conventional suspension systems.

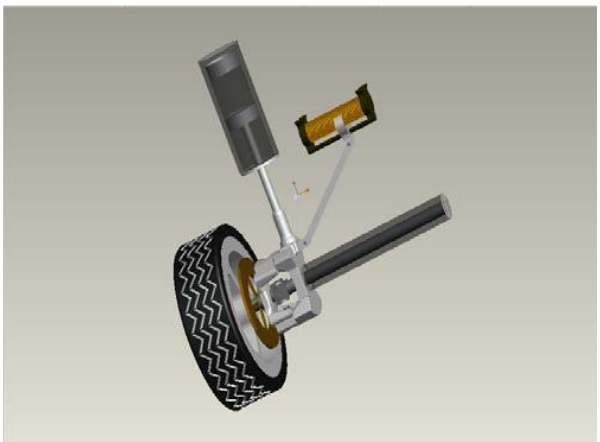

STRESS ANALYSIS USING ANSYS

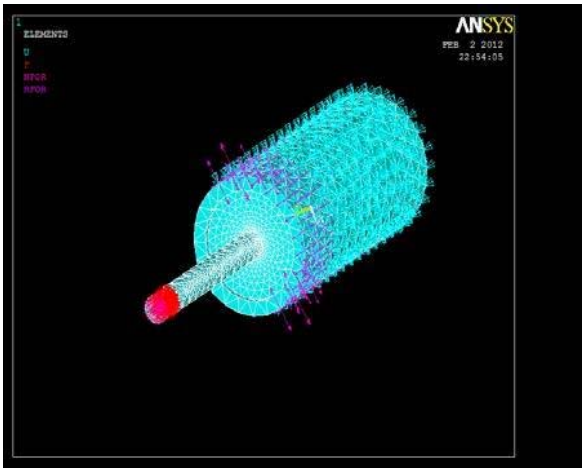

ARPN Journal of Engineering and Applied Sciences

MODEL DESIGNED USING PRO E

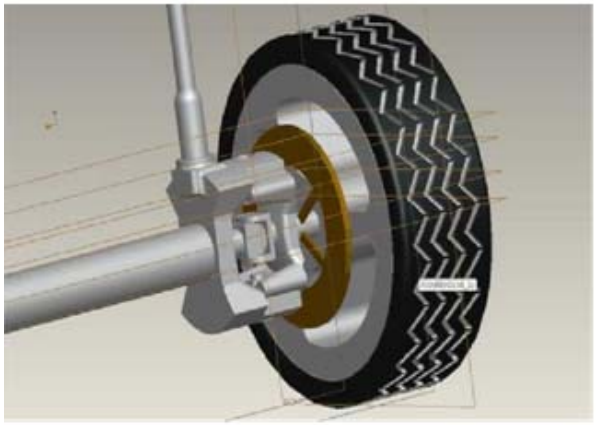

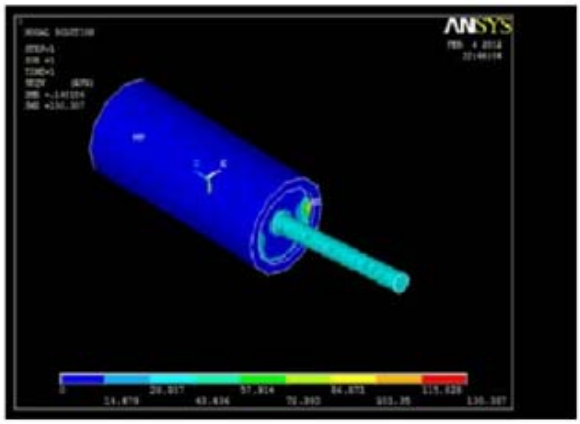

CONCLUSIONS

Apart from the suspension, the energy used is regenerated back to the battery. These suspensions will prevent the damages that can be caused due to the bottoming and lifting of the wheel as it is free from vibrations. Hence bringing in the use of Electromagnetic suspension will give you an easy and a comfortable drive.

REFERENCES

[1] Roger F Harrington. 2003. Introduction to electromagnetic engineering. Mineola, NY: Dover Publications. 56. ISBN 0486432416.

[2] Landau, L. D., Lifshits, E. M. and Pitaevskiĭ, L. P. 1984. Electrodynamics of continuous media; Volume 8 Course of Theoretical Physics (Second ed.). Oxford: Butterworth-Heinemann. p. §63 (§49 pp. 205-207 in 1960 edition). ISBN 0750626348.

[3] Andrzej Milecki, Miko Aj Hauke. 2012. Application of Magneto rheological fluid In Industrial Shock Absorbers, Mechanical Systems and Signal Processing. 28, 528-541.

[4] Babak Ebrahimi, Mir Behrad Khamesee, M. Farid Golnaraghi. 2008. Design and Modeling of a Magnetic Shock Absorber Based On Eddy Current Damping Effect, Journal of Sound and Vibration. 315, 875-889.

[5] Alberdi-Muniain, N. Gil-Negrete, L. Kari. 2012. Direct Energy flow Measurement in Magneto-Sensitive Vibration Isolator Systems, Journal of Sound and Vibration. 331, 1994–2006.

[6] Bart .L.J. Gysen, Johannes. J.H. Paulides, Jeroen. L.G. Janssen. 2010. Active Electromagnetic Suspension System for Improved Vehicle Dynamics, IEEE Transactions on vehicular Technology Vol. 59. N0. 3.

[7] Mitsubishi Motors Web Museum", Mitsubishi Motors website.

[8] Hilmar-at-Bose. July 5, 2006. "What Do You Think of This New Approach?"

[9] Mitsubishi Galant", Mitsubishi Motors South Africa website.

[10] MMC's new Galant.", Malay Mail, Byline: Asian Auto, Asia Africa Intelligence Wire, 16-SEP-02.

[11] Forbes Magazine - Amar Bose, The world's richest people.

[12] Adams, William Bridges. 1837. English Pleasure Carriages. London: Charles Knight and Co.

[13] MIT "Inventor of the Week Archive".

[14] Forbes Magazine - Amar Bose, The world's richest people.

[15] Opinion of the United States Supreme Court.

[16] Magnets". Think Quest. Retrieved 2009-11-06.

[17] Brauer, John R. 2006. Magnetic actuators and sensors. John Wiley and Sons. p. 20. ISBN 0-471-73169-2., Extract of page 20.

[18] "Joseph Henry". Notable Names Database. Retrieved 2009-11-06.