VOL. 11, NO. 3, FEBRUARY 2016 ISSN 1819-6608
ARPN Journal of Engineering and Applied Sciences

www.arpnjournals.com

RADIO SIGNAL MULTI-HOP (RSMP) POWER REDUCTION PROTOCOL FOR WIRELESS SENSOR NETWORKS

S. K. Sowmya[1], P. Deepika[1], N. Balaji[1] and A. Umamakeswari[2]
[1]Department of Computer Science and Engineering, School of Computing, SASTRA University, Tirumalaisamudram, Thanjavur, Tamil Nadu, India
[2]School of Computing, SASTRA University, Tirumalaisamudram, Thanjavur, Tamil Nadu, India
E-Mail: sowmikrishnamoorthy@gmail.com

ABSTRACT

Wireless sensor network consists of numerous sensors that are embedded with microprocessors and radio transceivers. These sensor nodes are deployed in a distributed fashion to sense the environmental conditions and this data is sent to a fixed Base Station (BS) of WSN. LEACH (Low Energy Adaptive Clustering Hierarchy) protocol uses distributed algorithm to form the sensor clusters. The selection of Cluster Heads (CH) is random and these CHs send the aggregated data directly to the BS. When the network diameter increases beyond a certain level, the distance between the CHs and the BS also increases. This is the drawback of single-hop communication as it reduces the network life time and energy efficiency of sensor nodes. The paper proposes Radio signal Multi-hop protocol which elects the CH based on the residual energy of sensor nodes. A CH also acts as a Prime Cluster Head (PCH) when it is nearer to the BS and this distance is determined by the radio signal. In a multi-hop network, each PCH receives the aggregated data from its closest CHs which in turn sends this to the BS. The proposed protocol results in improved lifetime and energy efficiency of sensor nodes.

Keywords: LEACH protocol, RSS (Received Signal Strength), multi-hop communication.

1. INTRODUCTION

Wireless Sensor Network (WSN) comprises of sensor nodes which are spatially distributed to sense physical and environmental conditions. A sensor node in WSN gathers sensory information and communicates with other connected sensor nodes in the network. The key components of a sensor node are controller, transceiver, external memory, power source and sensors. Although these sensor devices are inexpensive to deploy in large numbers, their resources like energy, bandwidth, memory and computational speed are greatly limited. Therefore, network lifetime is the salient term to be considered while designing a routing protocol. In order to achieve energy efficiency Clustering/Hierarchical protocols are used for sensor network. The fundamental well known clustering protocol is LEACH which divides the network into clusters with a Cluster Head (CH) in each cluster and Cluster Nodes (CN) communicate with the CH which in turn communicates with the sink node (SN).All the CHs can communicate with SN but as the WSN expands there is a significant increase in average distance between the CHs and SN. This leads to increase in communication cost thereby draining sensor node's energy. Hence this paper introduces routing protocol called Radio Signal Mutihop (RSMP) which elects Prime Cluster Head (PCH) based on Received Signal Strength value. This PCH acts as an intermediate node between CHs and SN and hence adopting multihop routing in the sensor network.

2. RELATED WORK

With recent advancements, the wireless sensor networks have become an integral part of military applications, environmental applications and so on. Every sensor node in a wireless environment transmits its data to a base station. The most modern network can transmit data bi-directionally and can also enable control over the sensor activity. The design of WSN can vary from star topology to advanced multi-hop networks. The sensor nodes are battery operated and hence WSN face power consumption constraints. In order to overcome this constraint many algorithms are put to use in WSN. The sensor nodes communicate using the links of wireless medium like infrared or optical media. The routing algorithm is the manner in which the data is transmitted from the sensor nodes to the base station. The algorithms can be flat, hierarchical and location-based. Among the different types of algorithms, the hierarchical routing algorithms are proved to be considerate in saving the total energy consumption of wireless sensor networks and are considered to be scalable when compared to the other routing algorithms. The most popular hierarchical routing protocol used in WSN is Low Energy Adaptive Clustering Hierarchy (LEACH).

In hierarchical clustering, the sensor nodes form clusters and head nodes are elected for each cluster. The Cluster Heads are responsible for performing the collection and aggregation of data from the clusters and sending it to the Base Station. The main idea behind the development of clustering technique is to reduce the traffic of the network towards the sink. Though the hierarchical technique can introduce overhead due to cluster configuration and maintenance, it is evident that the cluster-based protocols exhibit better performance and energy consumption during data collection and

dissemination in comparison with flat and location-based algorithms.

The basic idea of LEACH is to elect CHs randomly which does not ensure distribution of CHs. This results in equal priority for the nodes with low residual energy and for the nodes with high residual energy leading to the selection of a node with low energy as the CH. As a result the node loses its energy and becomes dead sooner and this significantly reduces the network lifetime. When the CHs are located far away from the SN, the communication becomes difficult as it consumes lot of energy. Hence LEACH cannot be used for applications that require large area coverage. To overcome this disadvantage, multi-hop and intra-cluster communication should be implemented along with LEACH. Using multi-hop LEACH communication a CH located at a large distance from the SN transmits the collected data to the other CHs that are at a closer proximity to the SN. The disadvantage of using multi-hop LEACH is that the there is an overhead in calculating the distance of each and every CH from the SN.

3. SENSOR NODE ARCHITECTURE

Sensors are the most common hardware devices that can provide a response to any changes in physical conditions like temperature or pressure. The sensors help measure physical data of the parameter that is to be monitored. The vital components of a sensor node include controller, transceiver, external memory and power source. The controller does the processing of data and controls the sensor node's functionality. The most commonly used controller is microcontroller. Other alternatives for microcontrollers are digital signal processors, FPGAs and desktop microprocessor. Transceiver is most vital component used for radio frequency based communication, optical communication and infrared communication. The transmitter and receiver functionalities are both combined into single device. The operational states of sensor node are transmit, receive, idle and sleep. The different on-chip kinds of memory of a microcontroller and flash memory are used to store data that is either transmitted or received. The sensor node consumes power for sensing, communicating and data processing. More energy is required for data communication than any other process. Power is stored either in batteries or capacitors. The continual analog signal produced by the sensors is digitized by an analog-to-digital converter and sent to controllers for further processing.

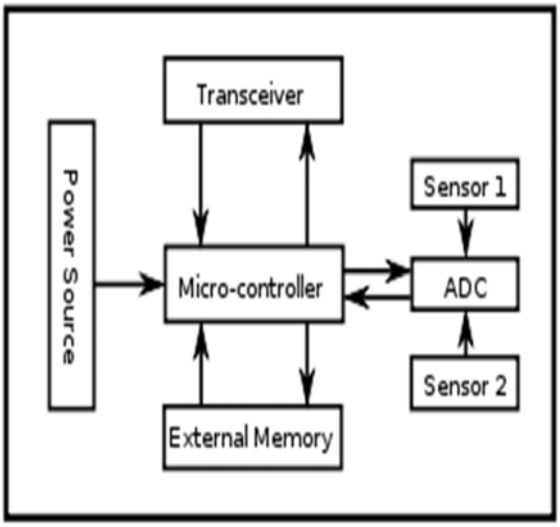

Figure-1. Sensor node architecture.

The battery operated power source triggers the working of other devices in the sensor node like micro-controller, transceiver and ADC. The primary requirement of a battery is to provide low self discharge, long shelf life, voltage stability etc. The continual analog signal produced by the sensors is digitized by an analog-to-digital converter and sent to controllers for further processing. The micro-controller beings the execution of time sensitive tasks and also controls the communication protocol. It felicitates in the execution and control of the primary application program. Since sensor node is an energy constraint device, the energy management of the micro-controller is by the multiple operation modes like active, idle, sleep etc. The radio transceiver acts as a transmission medium and it transmits a bit or a byte in the form of radio waves. It receives the radio waves and then transmits into a bit or a byte stream. When taking energy into consideration, the relevant kind of memory is on-chip memory of a micro-controller or a flash memory. Flash memory is widely used because of their inexpensiveness and storage capacity. There are two categories of memory which are based on the purpose of storage: user memory used and program memory. User memory contains data relating application or personal data. The program memory is mainly used for device programming. It also contains the identification data of the device. With the aid of all the components, the micro-controller processes the sensed information and displays it to the user.

4. ALGORITHM FOR RSMP

RSMP algorithm employs the following sub stages:

a) Cluster Head Selection
b) Prime Cluster Head Selection

ARPN Journal of Engineering and Applied Sciences

A. Cluster head selection

Cluster Head selection in RSMP is based on the residual energy of the CN. During the first round of selection CHs are elected randomly and then in the succeeding rounds the CN with higher residual energy is elected as the CH. The cluster formation is facilitated by broadcasting CH_MSG to CNs. Since the CNs may receive this CH_MSG from more than one CH, CN decides its cluster based on the message that holds greater Received Signal Strength (RSS) value. Once the CN has decided its cluster it sends CH_REPLY to the respective CH in order to confirm its acceptance.

Algorithm 1

1: Sensor_id: Unique identifier for each sensor in the network.

2: CH_id: Unique identifier for each CH in the network.

3:Initial_CN_i.E: Initial energy for each CN_i in WSN.

4: CN_i.E1: Energy consumed by the CN_i due to data transmission.

5: CN_i.E2: Energy consumed by the CN_i due to data reception.

6: CN_iFrame: Total energy consumed by CN_i i.e. (CN_iE1+CN_iE2)

7: Nframe: Number of frames being sent and received.

8: CN_iRemainingE: Residual energy of CN_i.

9: CH_iRemainingE: Residual energy of CH_i.

10: N elements: Number of elements in a cluster

11: for each CN_i in N elements do

1. CN_iRemainingE=Initial_CN_i.E- (Nframe *CN_iFrame)
2. if(CH_iRemainingE<CN_iRemainingE) then

i. CH_iRemainingE=CN_iRemainingE

ii. CH_id=Sensor_id

3. **end if**

12: **end for**

B. Prime cluster head selection

The CH that is nearer to the SN with adequate amount of residual energy will act as Prime Cluster Head (PCH).The SN broadcasts message comprising its ID to the CNs in the sensor network. The CH in each cluster stores the SN's id along with the RSS value as a new packet "PCH_Elect". Each CH exchanges this packet with other CHs and an average RSS value is calculated. This average value will be the RSS threshold value and the CH that exceeds this threshold value is elected as PCH. The CHs that are elected as PCH will send an acknowledgement packet to other CHs which promote the secondary cluster formation.

5. SIMULATION AND COMPARISON ANALYSIS

A. Performance analysis

The simulation of Radio Signal Multi-hop protocol using NetSim proves that the protocol reduces the power consumption of sensor nodes. Various parameters are taken into consideration such as packets collided, packets errored, overhead transmitted and total energy consumed as shown in Table-1. The length of the wireless sensor network environment in NetSim is provided to be 100 meters and the RSMP performance is evaluated by considering network configuration with 64 nodes.

Table-1. Performance metrics of RSMP.

Metric	Value
Simulation Time(ms)	30000.00
Packets Transmitted	326
Packets Errored	2
Packets Collided	2
Bytes Transmitted(Bytes)	10210.00
Payload Transmitted(Bytes)	3864.00
Overhead Transmitted(Bytes)	6346.00

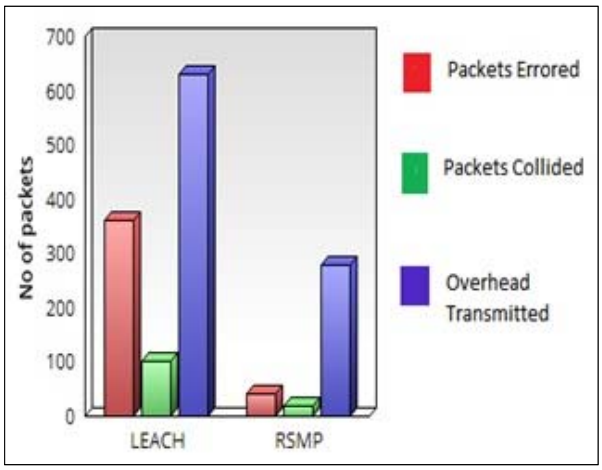

Figure-2. Comparison of performance metrics.

The above graph signifies that RSMP gives better results by reducing the number of errored and collided packets during data transmission. Figure-3 represents a line graph indicating total energy consumed by the CHs and PCHs over simulation time. From the line graph it is perceived that PCH's energy dissipation is higher than the CHs. This explains that CHs nearer to the SN alone consume more energy thereby increasing the energy efficiency and network life time.

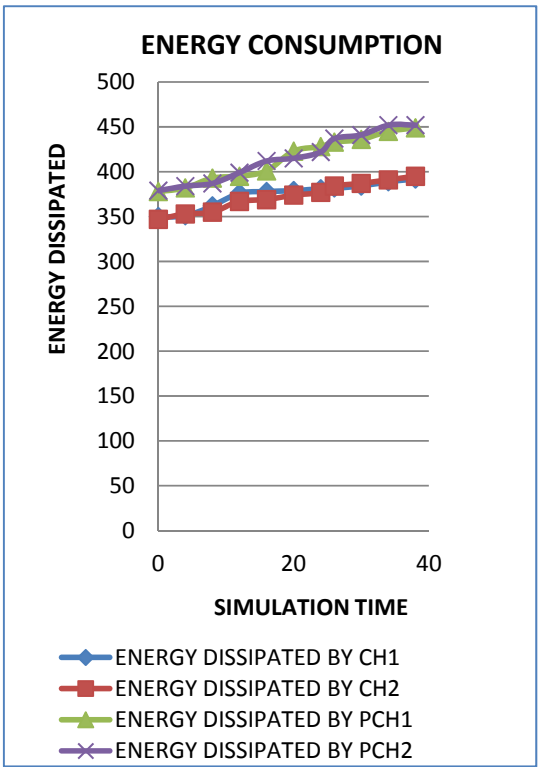

Figure-3. Energy dissipation of CHs and PCHs.

6. CONCLUSIONS

In this paper the proposed protocol alleviates the energy problem in sensor network. The process of selecting the CH and PCH based on the residual energy and Received Signal Strength diminishes the overhead in formulating the route to the SN. This protocol also reduces the power consumption of sensor nodes resulting in improved network lifetime and energy efficiency of sensor network. The simulation results acquired from NetSim specify that the proposed protocol balances the energy consumption of entire sensor network better than the LEACH protocol. The simulation results also imply that the proposed protocol is capable of transmitting packets with minimal collision and error. Thereby it outperforms in energy efficiency and lifetime of the sensor network.

REFERENCES

[1] Alakesh Braman, G.R. Umapathi. 2014. A Comparative Study on Advances in LEACH Routing Protocol for Wireless Sensor Networks: A Survey. International Journal of Advanced Research in Computer and Communication Engineering. 03(2).

[2] Sandeep Verma, Richa Mehta, Divya Sharma, Kanika Sharma. 2013. Wireless Sensor Network and Hierarchical Routing Protocols: A Review. International Journal of Computer Trends and Technology. 04(8): 2411-2416.

[3] Mian Ahmad Jan, Muhammad Khan. 2013. A Survey of Cluster-based Hierarchical Routing Protocols. International Journal of Computer Networks and Wireless Communications. 3: 138-143.

[4] Amit Bhattacharjee, Balagopal Bhallamudi and Zahid Maqbool. 2013. Energy-Efficient Hierarchical Cluster Based Routing Algorithm in WSN: A Survey. International Journal of Engineering Research and Technology. 02(5): 302-311.

[5] M. Faheem, B.N. Asri, *et al*. 2013. Energy based Efficiency Evaluation of Cluster-Based Routing Protocols for Wireless Sensor Networks. International Journal of Software Engineering and its Applications. 7(6): 249-264.

[6] Parminder Kaur, Mamta Katiyar. 2012. The Energy-Efficient Hierarchical Routing Protocols for WSN: A Review. International Journal of Advanced Research in Computer Science and Software Engineering. 02(11): 194-199.

[7] G. Rengugadevi, M.G. Sumithra. 2012. Hierarchical Routing Protocols for Wireless Sensor Network - A Survey. International Journal of Smart Sensors and Ad Hoc Networks. 2(01): 71-75.

[8] Neetika, Simarpreet Kaur. 2012. Review on Hierarchical Routing in Wireless Sensor Networks. International Journal of Smart Sensors and Ad- Hoc Networks. 2(03): 85-90.

[9] Ali Norouzi1, Abdul Halim Zaim. 2012. An Integrative Comparison of Energy Efficient Routing Protocols in Wireless Sensor Network. Scientific Research of Wireless Sensor Network. 04: 65-67.

[10] J. Hongbo, J.S. Jin and W. Chonggang. 2011. Prediction or Not? An Energy-Efficient Framework for Clustering-Based Data Collection in Wireless Sensor Networks. IEEE Transactions on Parallel and Distributed Systems. 22(6): 1064-1071.

[11] Naveen Kumar, Jasbir Kaur. 2011. Improved LEACH Protocol for Wireless Sensor Networks. In: Proceedings of 7th International Conference on Wireless Communications Networking and Mobile Computing, China.

[12] Shio Kumar Singh, M P singh and D K singh. 2010. A Survey of Energy-Efficient Hierarchical Cluster-Based Routing in Wireless Sensor Networks. International Journal of Advanced Networking and Applications. 02(02): 570-580.

[13] S. Kabadayi, A. Pridgen and C. Julien. 2006. Virtual Sensors: Abstracting Data from Physical Sensors. In: proceeding of the International Symposium on a World of Wireless, Mobile and Multimedia Networks, New York, USA.

[14] S.D. Murugunathan, D.C.F. Ma, R.I. Bhasin and A. Fapojuwo. 2005. A centralized energy efficiency routing protocol for wireless sensor network. Communications Magazine, IEEE. 43(3).

[15] I.F. Akyildiz, Weilian Su, *et al.* 2002. A survey on sensor networks. Communications Magazine, IEEE. 40(8).

[16] W. Heinzelman, A. Chandrakasan and H. Balakrishnan. 2000. Energy-efficient routing protocols for wireless microsensor networks. In: Proceedings of 33rd Hawaii International Conference System Sciences.