VOL. 11, NO. 3, FEBRUARY 2016 ISSN 1819-6608
ARPN Journal of Engineering and Applied Sciences

www.arpnjournals.com

NEW ENGINEERING DECISIONS IN NUCLEAR ENGINEERING

Pavel Davidovich Kravchenko[1], Ivan Mikhailovich Yablonovsky[2] and Dmitry Nikolaevich Fedorenko[3]
[1]Volgodonsk Engineering Technical Institute, the Branch of the National Research Nuclear University, MEPhI, Lenin St., Volgodonsk, Rostov region, Russia
[2]DNS, Stroiteley St. Volgodonsk, Rostov region, Russia
[3]Institute of Service and Business branch of the Don State Technical University in Shakhty, Department of Applied Mechanics and Machine Construction, Shevchenko St., Shakhty, Rostov Region, Russia
E-Mail: krapa21@yandex.ru

ABSTRACT

The paper has presented options of the security system when demounting the radioactive equipment of nuclear power stations, design options for the transport-hoisting equipment demounting, constructive schemes of the fuel-handling machine with the flexible suspension of the overloading object and the automatic device of the turn and capture of a pressure pen case fuse in the Water-Cooled Type Reactor.

Keywords: nuclear mechanical engineering, demounting, transport-hoisting equipment, fuel-handling machine, flexible suspension, automatic device, turn, capture.

1. INTRODUCTION

In accordance with the distribution of radioactivity levels subject to monitoring as a result of which necessary indicators are defined more precisely by means of automatic devices working on automated machining it is possible to plan the organization of works in such a way as to the operating personnel is completely protected from radiation influence at the dangerous level [1, 5].

Engineering decisions are made after the consideration of several options of dismounting operations sequence; in every particular case the corresponding expenditures connected with the design and the construction of special devices of safety measures for the operating personnel are counted. The problem is that there is now no source array of acquired options.

The paper has offered one of the options of dismounting operations sequence with the use of borated water as an absorber of case fragments radioactivity. The conditions of safe performance of works is the maximal decreased level of dose-expenditures on each operation including possible emergency that is reached by the use of automated devices both for cutting, capture, overloading and intermediate containerization of fragments. The use of such devices will lead to the rise in price of the dismounting process that is natural. However, the use in the course of the design of heuristic search methods for the best simple technical decisions can make it possible to find economically acceptable options ensuring reliability and safety of the dismounting process of the reactor installation right after its stop. The operating time of several options with expert assessment of each one is only required.

The offered option is one of the possible ones in modern conditions of the case reactor equipment dismounting technology development. In the light of experience with dismounting operations abroad and with an application of heuristic receptions at the design of such complexes it is reasonably possible to assume that the option of immediate dismounting after the reactor installation stop is quite competitive both from the point of view of technical safety and from the economic one.

2. THE SEARCH OF OPTIMAL OPTIONS OF THE TRANSPORT-HOISTING EQUIPMENT DESIGN AT THE NPS DISMOUNTING

Applied ways of the NPS dismounting, as a rule, contain at their root the principle of the radioactive case equipment fragmentation with the subsequent fragments containerization. The fragments can differ in size according to the applied processing equipment - from the chippings sizes when milling to the sizes of separate blocks received by mechanical sawing or other ways of slitting operation.

The transport-hoisting equipment (THE) has to provide reliable and safe performance both of operations on installation and removal of the processing fragmentation equipment and operations of fragments removal and containerization. One of the offered options of the NPS radioactive case equipment dismounting with the WCPR reactor provides an application of the basic bearing and demountable cap which operates both as the basic bearing framework for installation, operation and dismounting of the processing fragmentation equipment and the protection plate preventing space above the reactor from the impact of radiation.

Let's consider features of the search of optimal decisions at the THE design according to the model which the Figure 1 presents.

The model is presented schematically as it is usually accepted in practice of the project work.

The case object equipment fragmentation in our case is made by sawing on fragments in the technological bottom-up sequence [1, 2]. Fragments 1 with the use of the

VOL. 11, NO. 3, FEBRUARY 2016 ISSN 1819-6608
ARPN Journal of Engineering and Applied Sciences

gripping device 2 move from a zone I to the containerization room III. Thus, it is necessary to provide performance of an HHK>HRK condition in order the length HRK of the rope 3 which is under the influence of radiation in a zone I (a section "polluted" by radiation) was less than the height HHK of the protection case (plate) for the rope; in this case the leakage of radioactive elements to the safe zone IV can be minimized. In this case the hoist engine 4 can be used both for work on the light duty in conditions of the usual machine-building enterprise.

It is appropriate to construct the bearing framework 5, which is the basic element, rotary and fast-folding for its dismounting convenience after the fragmentation completion and object radioactive fragments removal.

3. THE SEARCH OF OPTIMAL OPTIONS OF THE TRANSPORT-HOISTING EQUIPMENT DESIGN AT THE NPS DISMOUNTING

Applied ways of the NPS dismounting, as a rule, contain at their root the principle of the radioactive case equipment fragmentation with the subsequent fragments containerization. The fragments can differ in size according to the applied processing equipment - from the chippings sizes when milling to the sizes of separate blocks received by mechanical sawing or other ways of slitting operation.

The transport-hoisting equipment (THE) has to provide reliable and safe performance both of operations on installation and removal of the processing fragmentation equipment and operations of fragments removal and containerization. One of the offered options of the NPS radioactive case equipment dismounting with the WCPR reactor provides an application of the basic bearing and demountable cap which operates both as the basic bearing framework for installation, operation and dismounting of the processing fragmentation equipment and the protection plate preventing space above the reactor from the impact of radiation.

Let's consider features of the search of optimal decisions at the THE design according to the model which the Figure 1 presents.

The model is presented schematically as it is usually accepted in practice of the project work.

The case object equipment fragmentation in our case is made by sawing on fragments in the technological bottom-up sequence [1, 2, 6]. Fragments 1 with the use of the gripping device 2 move from a zone I to the containerization room III. Thus, it is necessary to provide performance of an $H_{HK}>H_{RK}$ condition in order the length H_{RK} of the rope 3 which is under the influence of radiation in a zone I (a section "polluted" by radiation) was less than the height H_{HK} of the protection case (plate) for the rope; in this case the leakage of radioactive elements to the safe zone IV can be minimized. In this case the hoist engine 4 can be used both for work on the light duty in conditions of the usual machine-building enterprise.

It is appropriate to construct the bearing framework 5, which is the basic element, rotary and fast-folding for its dismounting convenience after the fragmentation completion and object radioactive fragments removal.

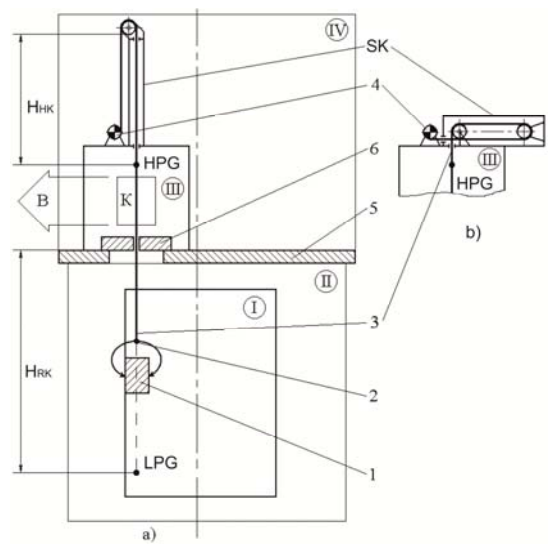

Figure-1. The predesign model of the THE design scheme option: a) without winding on blocks of the "polluted" rope; b) the option with multibank winding; I - the WCPR radioactive case which is subject to dismounting; II - a radioactive zone of the object; III - the fragments containerization room; IV - the superstructure room protected from the influence of radiation; 1 - a fragment of the case equipment; 2 - the gripping device; 3 - the lifting rope; 4 - the hoist engine; 5 - the rotary bearing cap; 6 - the shifted protection cap; K - a container; LPG - the lower position of the gripping device; HPG - the top position of the gripping device; H_{HK} - the height of the protection case for the rope; H_{RK} - the length of the rope which is under the influence of radiation; B- the direction of removal of a container; SK - the protection case.

The design of the shifted protection cap 6 is simple and allows the rope passing through it at the minimal penetration of radiation into the containerization zone III.

The size of the length of the "polluted" rope sector H_{RK} is approximately determined by the object sizes and the device provisions - the lower LPG and the top HPG. The protection case SK for shielding of the "polluted" rope sector in the presented schemes a) and b) is the bearing construction and has to be calculated on working capacity and reliability subject to all construction mechanics standards.

Sample calculations show that with an application of the project of the case equipment fragmentation by its sawing on separate large fragments weighing from 0.2 to 2 t by means of the mobile metal-cutting equipment and suspended remotely-controlled

VOL. 11, NO. 3, FEBRUARY 2016 ISSN 1819-6608
ARPN Journal of Engineering and Applied Sciences

blocks the dismounting time decreases by 2-3 times in comparison with the way of continuous milling of the case at the decreasing metal consumption of technical means of fragmentation and transportation by 5 - 6 times.

4. THE ITC FUEL HANDLING MACHINE WITH THE ROPE SUSPENSION OF OVERLOADING OBJECTS IN THE NUCLEAR WCPR REACTOR

The Novo-Voronezh NPS weight of the separate moved fuel assembly (FA) for WCPR-1000 reactor of the block 5 is 753 kg, the weights of the other FA for similar reactors insignificantly differ, and we will mostly consider them less than 1 t.

Special service conditions are presented by the dangerous radioactivity level, ensuring the high-leveled security of the overloading process, ensuring the high degree of accuracy of the handling device direction on the object, the work which completely operates on automated machining have caused emergence of this type of the IT fuel handling machine or the transport -hoisting robot with long rigid telescopic links that has led to the increased IT weight more than 84 t [3].

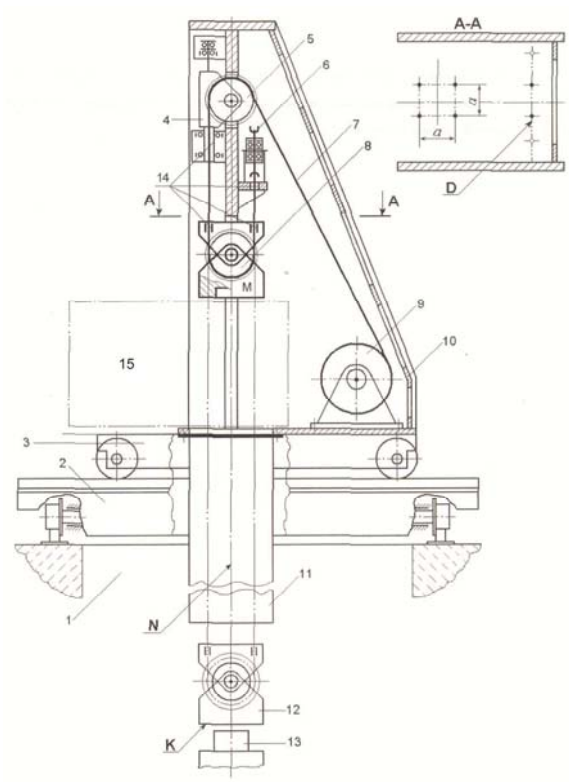

Figure-2. The scheme of the fuel elements overloading option in the nuclear reactor by the fuel handling machine with the flexible suspension of objects.

Emergence of new ways and equipment for transport – overloading operations has allowed proving and offering a new way of fuel elements overloading with an application of the fuel handling machine with the flexible FA suspension in the form of dual rope tackle blocks which bridge cranes designs are widely used instead of a rigid telescopic working pole.

Turn and capture of the pen case fuse is carried out by means of the fuel handling machine turn mechanism supplied with the rigid telescopic working boom which is very difficult, massive and expensive device.

The proposed decision allows simplifying the process of turn and capture of the pen case fuse due to the influence of gravity of the vertically moving device suspended on the rope and wedge effect at the interaction between contacting elements of the device and the fuse. The offered way is carried out by means of the device which the Figure-2 presents.

In the WCPR fuel elements overloading zone 1 the reactor on the floor of reactor building the fuel handling machine consisting of the bridge 2, the cart 3 on which are established the bearing welded metal construction 10, on which the drive roll 9 of the drive of overloading objects hoist, tackle blocks 5, 6 and 8 forming the dual tackle block are fixed, is installed.

The top two blocks 5 of the tackle block are fixed on the metal construction 10 on the axes which coincide with the axes of ropes covering blocks 8.

The rope 7 bypasses all blocks of tackle blocks, and the additional mass M 12 on the lower mobile block 8 provides sufficient tension of branches of the tackle block for its strictly vertical movement on the vertical axis N. Besides, ensuring the high degree of accuracy of ropes branches arrangement by sizes a x a (the section A-A) is made at the expense of directing openings 14 in the top knot support leg of the motionless block 5 and in the mobile block.

In the A-A section on the line D there is shown a direction of the rope shift running from the drive roll 9. The zone 15 of service and change of adaptations and tools is theoretically shown. In this zone there is, for example, change of the automatic capture of carriers or other adaptations in the place K which is theoretically shown. For the fast movement of the engine after the object capture the last one is lifted on height which is sufficient in order the entire object enters the pipe 11 providing safe movement of the object.

The direction of the suspended block with the additional weight 12 and the object capture is made after the axis N combination with the geometrical axis of the object 13 that is made by means of well-known ways presented in technological operations on the FA overloading by reloading engines.

The most complicated technical decision in a new way is ensuring the operation of the object turn and capture - the pen case fuse for fuel carriers in the WCPR nuclear reactor that in the existing design of the MP1000 fuel-handling machine is carried out by means of a telescopic working pole. In the offered invention this

VOL. 11, NO. 3, FEBRUARY 2016 ISSN 1819-6608
ARPN Journal of Engineering and Applied Sciences

operation is carried out under the influence of gravity of the additional load cylinder suspended on the rope tackle block.

5. THE DEVICE OF TURN AND CAPTURE OF THE PEN CASE FUSE

The suspended automatic device of the pen case fuse turn and capture [4] consists of the following elements as the Figure 3 presents. The assembly 1 is a place of connection of the massive continuous metal cylinder 5 of $D_Ц$ diameter to the flexible rope suspension of the handling device.

The cylindrical shell 3 is the main basic detail in which there is a cylinder 5 which movement in vertical direction is limited by the cap 2 connected to the case 3 by means of usual bolted connections.

The cylinder 5 has two symmetric longitudinal key holes and moves without rotation relative to the vertical axis owing to sliding on splines 4 which are rigidly attached to the internal surface of the case 3 by screws 6 (the section Г-Г).

The linear bushing 7 with two symmetrically located side notches is attached to the cylinder 5 from below by means of bolted connection; side contact surfaces K located at α degrees to the vertical line when lowering the cylinder interact with top pins 9 pressed into the linear bushing 8 as the picture B shows.

The linear bushing 8 on the internal cylindrical surface Ød is connected on attachment to a gap with the pen case fuse 11 and contains two bayonet notches into which two pins 12 pressed in the pen case 11 enter as the picture B shows.

The pen case fuse 11 contains also three cases symmetrized in the fuse through 120 ° degrees a pin 13 pressed in the lower cylindrical part of the fuse; pins 13 can move in bayonet notches П of the case 14.

The linear bushing 8 is connected by bolts to the bearing ring 10 leaning when handling the device on fixing elements 15. The fixing elements 15 by means of screw connections are attached to the internal surface of the case 3 and enter by their luges into bayonet notches П of the case 14 as the picture A shows.

On the lower attachment surface the case 3 has the conic surface Кп for simplification of the device attachment to the face surface of the case 14. The figure shows the device at the time of the process of the object turn when the cylinder 5 dropping.

The device works the following way.

At the massive cylinder 5 suspension in the assembly 1 to the handling device, for example, to the crane hook the case 3 under the influence of its gravity can fall down to cylinder stop into the surface of the cap 2.

The suspended device moves down, the case 3 by means of the directing cone Кп is directed to the base 14, aligned on the cylindrical landing surface of the base on attachment with a gap, falls further to free attachment of fixing elements 15 into П bayonet notches.

The linear bushing 8 on diameter Ød is connected to the pen case fuse 11 on attachment with a gap, thus pins 12 enter bayonet notches of the linear bushing 8 and occupy an initial position НП as the picture B shows. The case 3 becomes motionless.

The cylinder 5 under the influence of its gravity G continues to fall and contact surfaces K of inclined side notches of the linear bushing 7 interact with top pins 9 of the linear bushing 8 under the influence of force R_G created due to the wedge effect at force G, thus the linear bushing 8 rotates relative to the vertical axis due to the movement of pins 9 from an initial situation НП to a final position КП as the picture B shows.

Then, lower pins 12 pressed in a cylindrical part $\varnothing D_Ц$ of the pen case fuse 8 move in the bayonet notch.

Rotation comes from an initial position НП to a final position КП as the pictures A and B show. A final position when the fuse opening 11 is defined by lower pins 13 movement to the stop into the vertical wall of the bayonet notch П.

Reactions from the turn R_G force are perceived by key connections and fixing elements established into bayonet notches.

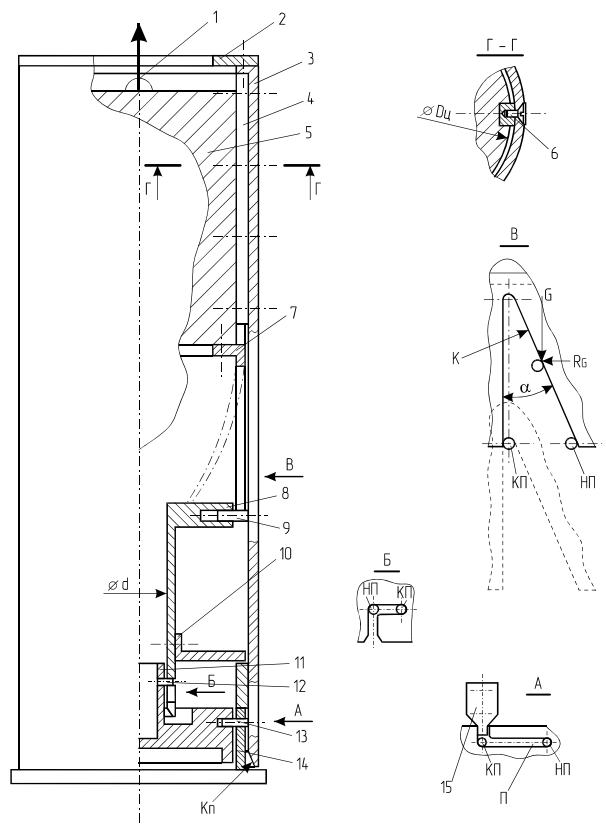

Figure-3. The suspended automatic device of turn and capture of the pen case fuse.

The Figure-3 shows the device at the time of the process of the object turn when the cylinder 5 dropping.

When the whole device is being raised the pen case fuse 11 is also being raised because lower pins 13 can freely leave the bayonet notch 14 and top pins 12 of the pen case fuse 11 are in the bayonet notch of the linear bushing 8 in an end position КП which stops the movement in vertical direction; the linear bushing 8 connected by bolts to the bearing ring 10 perceiving the pen case fuse 11 weight if it rests on fixing elements 15 will move together with the pen case use 11 up.

6. CONCLUSIONS

Operability of the scheme is theoretically proved. The decreasing quantity of components testifies to its reliability. In general the increasing level of reliability is determined by replacement of a rigid telescopic working pole with the consecutive connection of elements on the rope suspension which reliability is provided with the parallel work of a set rope wires at a safety factor.

The model of the handling device in the ITC fuel handling machine with the rope suspension of objects of the movement and the automatic device of turn and capture of the pen case fuse is made in a scale 1:5, operability of the device in laboratory conditions is checked; the results of tests testify to its functional suitability.

REFERENCES

[1] Kravchenko P.D. 2012. The innovative design decisions in nuclear engineering. P.D. Kravchenko. Global nuclear safety-2012 №4 (5) December - Publishing House of the National Research Nuclear University «MEPhI». pp. 60-65.

[2] The patent 2260502RU C1 VGR7 B 23 C 3/00, G21 C 19/00 The way of fragmentation of the radioactive equipment by means of suspended blocks-banks/P.D. Kravchenko, I. V. Berezin, E.V. Berezin, I. V. Shestakova (RU) 2004117635/02, Applic.: 09.06.2004, Published: 20.09.2005 Bulletin № 26- pp. 4 with the picture.

[3] The patent 2319236RU C1 (61) ITC G21C 19/00 (2006/01) The device of fuel elements overloading in the nuclear reactor by fuel handling machines with the flexible suspension of objects / P.D. Kravchenko, I. M. Yablonovsky, V. S. Magalyasov (RU) - 2006119869/06/ Applic.: 06.06.2006, Published: 10.03.2008, Bulletin №7. pp. 3 with the picture.

[4] The patent 2332729RU C1 (61) ITC G21C 3/00 (2006.01) the suspended automatic device of turn and capture of the pen case fuse / P.D. Kravchenko, I. M. Yablonovsky, V. S. Magalyasov (RU) - 2007111699/06, Applic: 29.03.2007, Published: 27.06.2008, Bulletin No. 24. pp. 4 with the picture.

[5] Finaev, V., Kobersy, I., Beloglazov, D., Shapovalov, I., Kosenko, E., Soloviev, V. 2015. Design of the neuro-like learning control system for a vehicle. WSEAS Transactions on Systems and Control. Volume 10. pp. 328-334.

[6] Alvarenga, M.A.B., Frutuoso E Melo, P.F. 2015. Including severe accidents in the design basis of nuclear power plants: An organizational factors perspective after the Fukushima accident. Annals of Nuclear Energy. Volume 79. pp. 68-77.