VOL. 11, NO. 4, FEBRUARY 2016 ISSN 1819-6608
ARPN Journal of Engineering and Applied Sciences

www.arpnjournals.com

EFFECTS OF STATIC LOADING ON MOTION INTERCHANGER MODULE FOR HYBRID MOBILE ROBOT

Qadir Bakhsh[1], Khalid Hasnan[1], Sanam Ayub[2], Bhagwan Das[1], Aftab Ahmed[1] and Ali Raza[1]
[1]Universiti Tun Hussein Onn Malaysia, Batu Pahat, Johor, Malaysia
[2]Riphah International University Islamabad, Pakistan
E-Mail: qadirquest@gmail.com

ABSTRACT

To design a mechanical systems, the designer should be proficient in the design of individual elements and components that embrace the system. There are few parametrs commonly needed to consider for its design, such as part dimensions, shape, material, load and nature of application. In this paper the design and effects analysis of static loading on motion interchanger unit of hybrid mobile robot is presented. The motion interchanger is a switchover module that helps the locomotion system transformability while robot moves on wheel or track mechanism. For the effective and reliable robot design, the model were then analyzed under static loading condition. The selected material aluminium alloys Al7075-T6 were subjected under different static load conditions i.e. 200N, 400N, 600N, 800N & 1kN for its mechanical behaviour analysis. The study concluded through the simulation results that the mobile robot with material aluminium alloy Al7075-T6 would failed with the increase of static loading.

Keywords: static loading, mobile robot, locomotion system, hybrid mechanism.

INTRODUCTION

Mechanical design is either to formulate a plan for the satisfaction of a specified need or to solve existing problems (Budynas & Niskett., 2008). In the robotic system, the locomotion capability is the basic function that includes the robot working in indoor and outdoor environments (Bakhsh *et al*., 2013). Robots are further categorized in two types one is fixed station robot and other is mobile robot. Mobile robots are used to work in those environments, where human entrance for work is not safe and unaffordable (Enayati & Najafi., 2011).

This paper presents the design and effects of static loading analysis for motion interchanger module or track tensioner unit (TTU) for hybrid locomotion mobile robot by using Solidworks (Hasnan *et al*., 2014). The model of this mobile robot is shown in Figure-1. This hybrid robot is consists of wheel and track locomotion mechanism, it can move either on wheel or track or wheel and track both. Therefore, this unit that used to make this mechanism changeover without retardation in robot movement. The model was designed and simulated in SolidWorks under static load condition for von mises stress failure, and the aluminium alloys Al7075-T6 was selected for the analysis material.

INTERCHANGER MODULE DESIGN

The motion internchanger module or track tensioner unit is the most important part and it helps the mobile robot, to move in multi locomotion systems by its interchangeable locomotion phenomena. At smooth and plain path it moves on wheel mechanism, because at low energy consumption it gets high velocity and high maneuverability (Hasnan *et al*., 2014).

If sudden the working environment or path changed to rough and unstructured then robot change its locomotion in track mechanism. Because of this transformation of locomotion system, motion interchanger module mostly subjected to external load and stress in terms of weight of robot. Therefore, it is necessary to analyze the mechanical behavior of this unit under specific load conditions, so that it would be able to sustain the external applied load up to certain limit or level. This module is operated by means of pinion gear that is in mating with rack. The pinion gear is driven by a servo motor, which transmits the power or torque to the rack and pinion unit. The module is designed in two sections or regions, both sections contains of different number of guider drum as its child components.

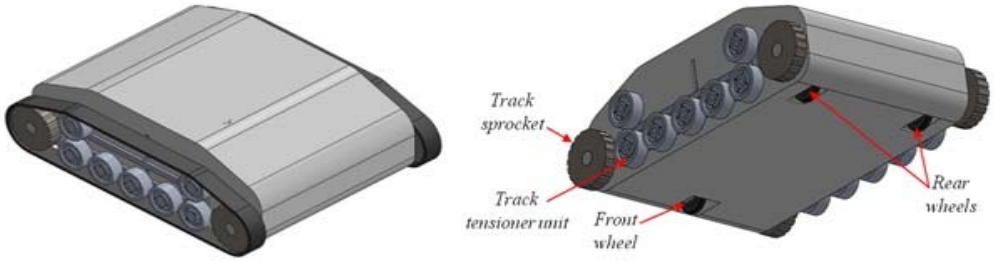

Figure-1. Hybrid mobile robot (Hasnan *et al*., 2014).

In lower portion, it contains five guider drums mounting, which produced the tension and suspension of track belt. The upper section contains two guider drums on each corner, those drums used to maintain the length of track belt during robot move on wheel locomotion system. Figure-2 shows the detail of design and dimensions for track tensioner unit and its child components, all values are given in millimeters (mm).

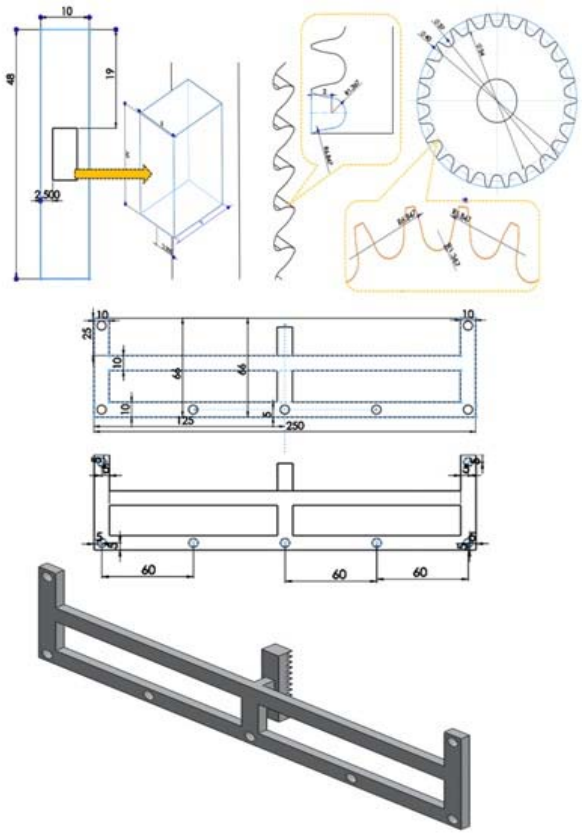

Figure-2. Motion interchanger module (Hasnan *et al*., 2014).

MECHANICAL BEHAVIOR ANALYSIS

Mechanical behaviour analysis covers the model failure caused due to the application of external load or force. Therefore, it is necessary to analyze load carrying members for stress and failure due to direct loads, shear, tensional and bending. In the principle of statics, it is to analyze the type of forces employed on each load carrying model or members. Stress analysis is a very important factor for the designer and manufacturer to know the reliability of their design or product (Budynas & Niskett., 2008). Prior to failure, ductile materials undergo significant plastic deformation, which has a major influence on damage evolution (Vignjevic *et al*., 2012). Aluminium alloys are used commonly in most of mobile robot design because of its outstanding characteristics such as; high strength, light weight, corrosion resistance and high thermal conductivity (Budynas & Niskett., 2008). Aluminium and its alloys are being used successfully in a wide range of applications, from packaging to aerospace industries. Due to their good mechanical properties and low densities, these alloys have an edge over other conventional structural materials (Mustapha *et al*., 2009). Al7075 series are often used in transport applications, including Aircraft fittings, gears and shafts, fuse parts, meter shafts and gears, missile parts, regulating valve parts, worm gears, keys, aircraft, aerospace and defence applications; bike frames, all-terrain vehicle (ATV) sprockets, due to their high strength-to-density ratio (ASME International., 1990), the chemical composition of this metal is illustrated in Table-1.

Table-1. Chemical composition of aluminum alloy Al7075-T6 (ASME International., 1990).

	% Si	% Ti	% Fe	%Cu	% Mn	% Mg	%Zn	% Cr	% Al
Al7075-T6	0.4	Max 0.2	Max 0.5	0.12-2	Max 0.3	2.1-2.9	5.1-6.1	0.18-0.28	87.1-91.4

SIMULATION SETUP

Firstly, the model is imported into the solidworks simulation tool, where the material for designing is selected. The basic information related to the model was given by the tool automatically, Al7075-T6 its mass is 9.203×10^{-2} kg, volume is 3.275×10^{-5} m^3 and weight is 90.197×10^{-2} N. The model was tested for its failure analysis under static load condition, the different loads 200N, 400N, 600N, 800N & 1kN applied on the rack part of motion interchanger module by means of pinion gear. The constraint details are given in Figure-3, where the point of force or load application is defined at the rack part. The downward load applied on the rack, because it requires lifting the whole body of mobile robot, while it starts moving on track mechanism. At the points where the guider drums are coupled with the module are supposed to be a fixed pint. In the simulation the load is applied at the top surface of rack, as the equal intensity of forces applied on the each teeth of rack.

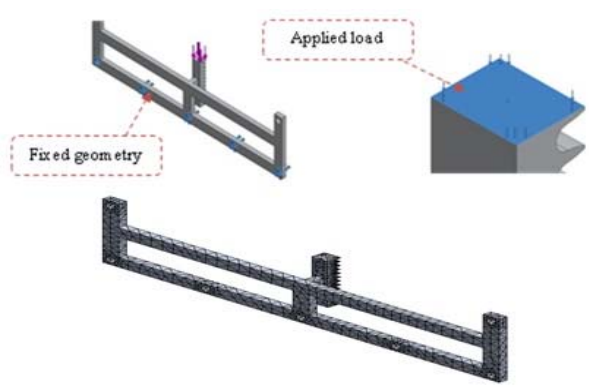

Figure-3. Constraint and meshing of module.

VOL. 11, NO. 4, FEBRUARY 2016 ISSN 1819-6608
ARPN Journal of Engineering and Applied Sciences

www.arpnjournals.com

RESULTS AND DISCUSSIONS

The model undergo for its deformation by von mises stress at different deformation scale values such as 89.56 (200N), 44.78 (400N), 29.85 (600N), 22.39 (800N) and 17.912 (1000N). The simulation result gives the detail of minimum and maximum von mises stress value under the yield strength 505 MN/m^2 for Al7075-T6.

- **For 200N:** The minimum value of static nodal stress is 8.991x10^{-2} kN/m^2 at 15205 nodes and maximum value is 57.359x10^3 kN/m^2 at 15521 nodes. The simulation results of deformed model and stress-strain diagram are shown in Figure-4.
- **For 400N:** The minimum value of static nodal stress is 17.982x10^{-2} kN/m^2 at 15205 nodes and maximum value is 114.719x10^3 kN/m^2 at 15521 nodes. The simulation results of deformed model and stress-strain diagram are shown in Figure-5.
- **For 600N:** The minimum value of static nodal stress is 16.54x10^{-2} kN/m^2 at 15192 nodes and maximum value is 172.101x10^3 kN/m^2 at 15521 nodes. The simulation results of deformed model and stress-strain diagram are shown in Figure-6.
- **For 800N:** The minimum value of static nodal stress is 35.965x10^{-2} kN/m^2 at 15205 nodes and maximum value is 229.438x10^3 kN/m^2 at 15521 nodes. The simulation results of deformed model and stress-strain diagram are shown in Figure-7.
- **For 1000N:** The minimum value of static nodal stress is 36.828x10^{-2} kN/m^2 at 15205 nodes and maximum value is 286.799x10^3 kN/m^2 at 15521 nodes. The simulation results of deformed model and stress-strain diagram are shown in Figure-8.

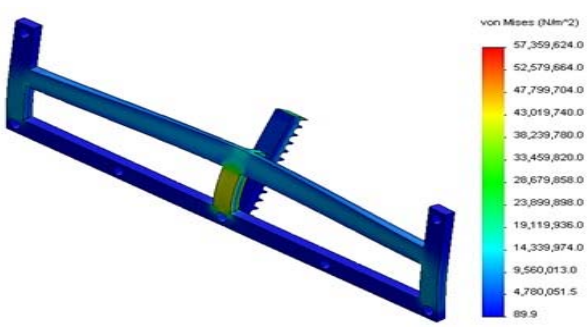

(a)

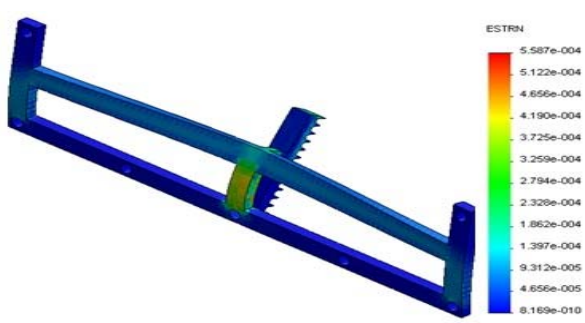

(b)

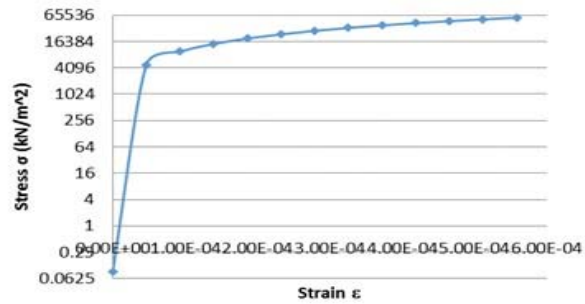

(c)

Figure-4. (a) Von mises stress **(b)** Equivalent strain **(c)** Stress-strain diagram for 200N load.

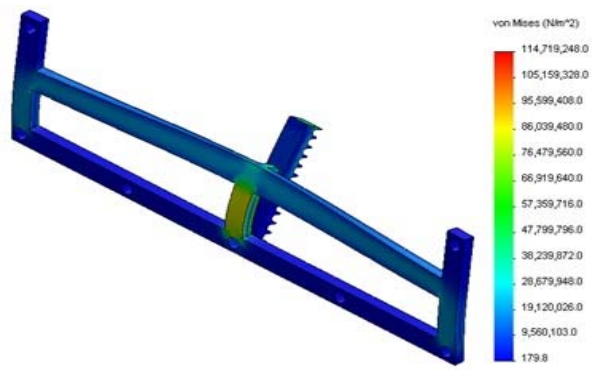

(a)

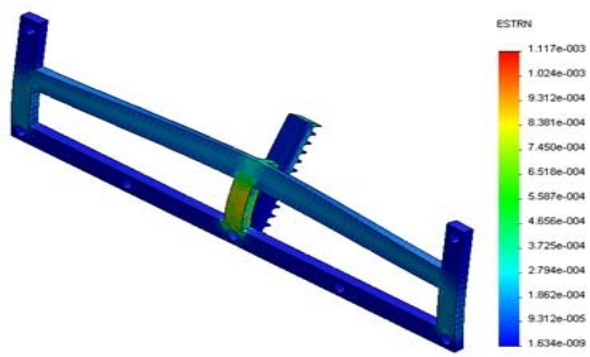

(b)

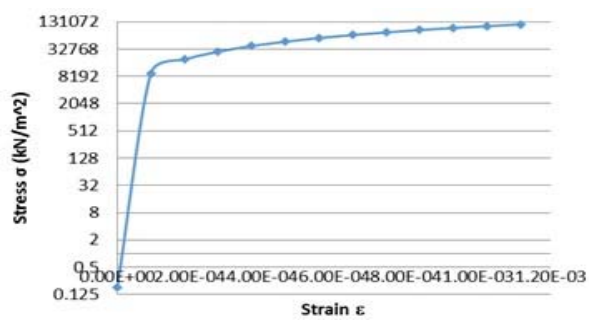

(c)

Figure-5. (a) Von mises stress (b) Equivalent strain (c) Stress-strain diagram for 400N load.

VOL. 11, NO. 4, FEBRUARY 2016 ISSN 1819-6608
ARPN Journal of Engineering and Applied Sciences

www.arpnjournals.com

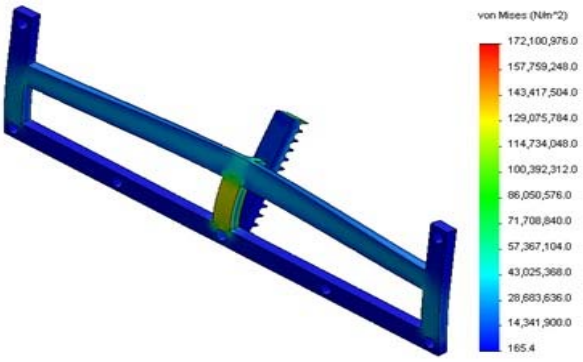

(a)

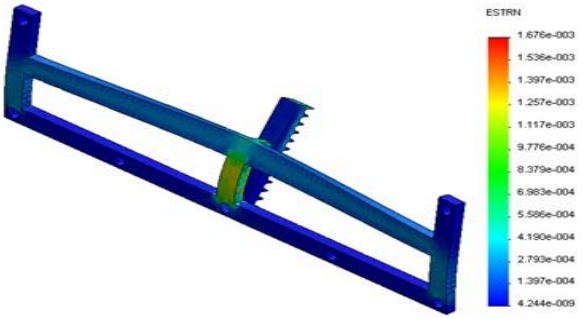

(b)

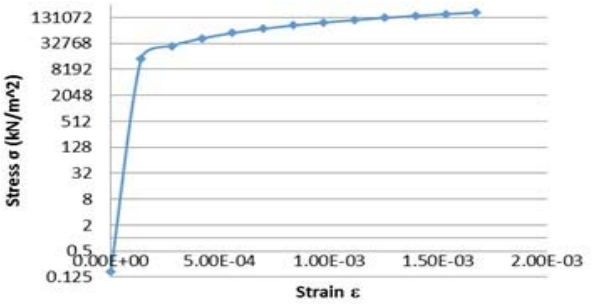

(c)

Figure-6. (a) Von mises stress (b) Equivalent strain (c) Stress-strain diagram for 600N load.

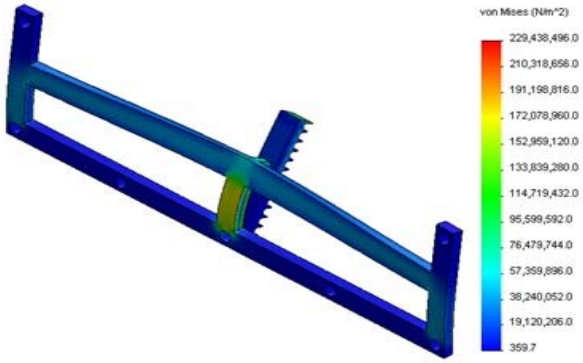

(a)

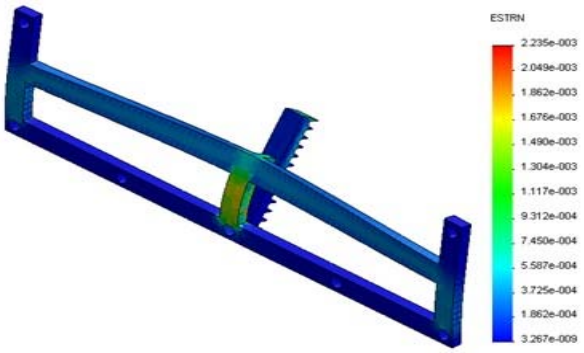

(b)

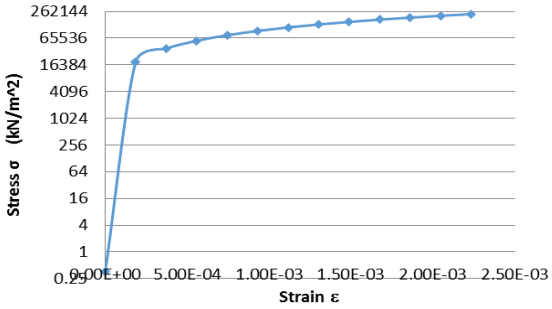

(c)

Figure-7. (a) Von mises stress (b) Equivalent strain (c) Stress-strain diagram for 800N load.

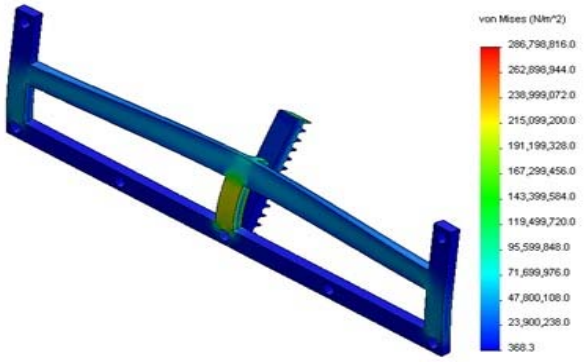

(a)

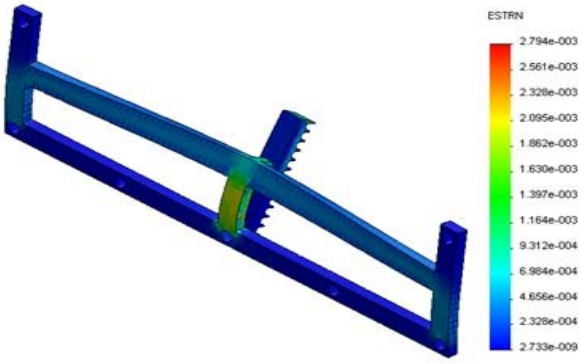

(b)

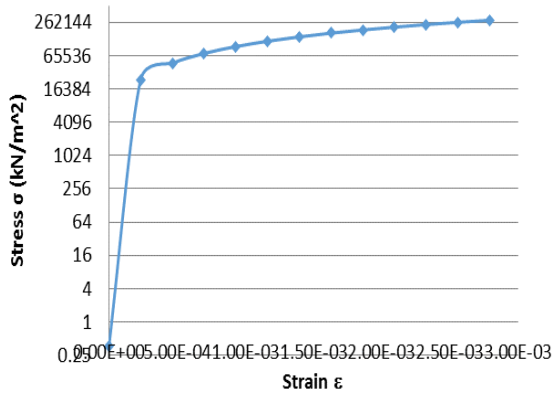

(c)

Figure-8. (a) Von mises stress (b) Equivalent strain (c) Stress-strain diagram for 1000N load.

CONCLUSIONS

For the selection of a suitable material for hybrid mobile robot design, the Aluminum alloys Al7075-T6 was investigated for its stress analysis. For the stability of the materials, the motion interchanger module of mobile robot was then analyzed under various static load conditions. In this method of FEA, the part was subjected to payload of 200N, 400N, 600N, 800N and 1kN by defining the constraint according to their function. The results obtained from simulation were then plotted in the stress-strain curves for all applied loads, individually as well as comparatively. The comparative results in Figure-9 shows that motion interchanger module made in material Al7075-T6 is deformed, because the stress induced due to the external load caused high elongation and deformation in the high appied load. Therefore, the study has concluded that the module with variable external load is gives high deformation value with respect to the increase in load.

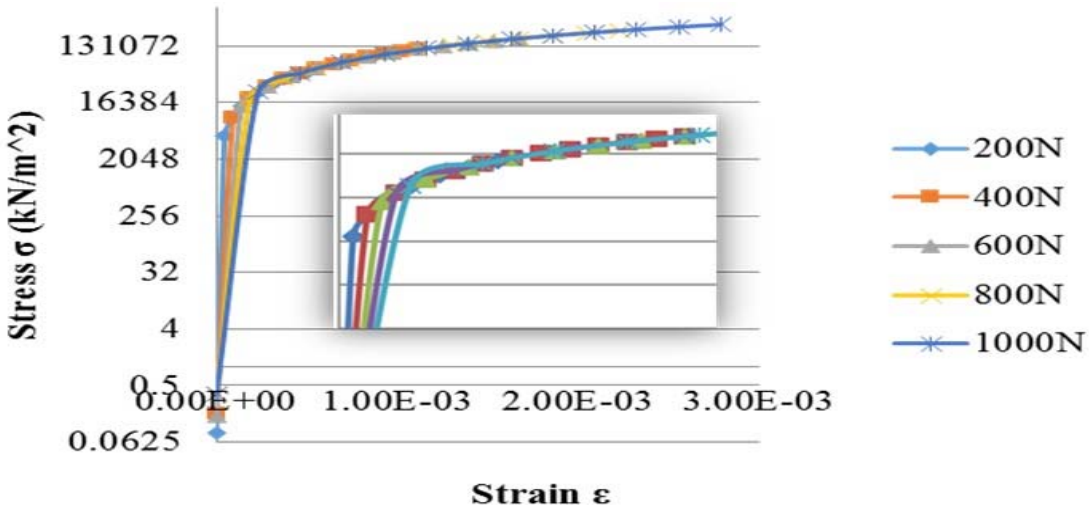

Figure-9. Comparative study of all loads.

ACKNOWLEDGEMENTS

The authors would like to thank the University Tun Hussein Onn Malaysia (UTHM) for financially supporting of this research.

REFERENCES

[1] Budynas, R.G., & Niskett, J.K. (2008). Shigley's Mechanical Engineering Desig, 8th ed. McGraw Hill companies.

[2] Bakhsh, Q., Hasnan, K., & Ahmed, A. (2013). Comparative Study between Wheeled and Tracked Mobility System for Mobile Robot. Applied Mechanics and Materials, 393, pp.538–543.

[3] Enayati, N., & Najafi, F. (2011). Design and manufacturing of a tele-operative rescue robot with a novel track arrangement. Industrial Robot: An International Journal, 38(5), pp.476–485.

[4] Hasnan, K., Bakhsh, Q., & Ahmed, A. (2014). New Hybrid Locomotion System Design. Australian Journal of Basic and Applied Sciences, 8(4), pp.247–252.

[5] Hasnan, K., Bakhsh, Q., Aisham, B., & Ahmed, A. (2014). Design and Failure Analysis of Track Tensioner Unit for Mobile Robot Using Solidworks. Applied Mechanics and Materials, 575, pp.721–725.

[6] Vignjevic, R., Djordjevic, N., Campbell, J., & Panov, V. (2012). Modelling of dynamic damage and failure

in aluminium alloys. International Journal of Impact Engineering, 49, pp.61–76.

[7] Mustapha, B., Abdelhamid, H., & Mohamed, B. (2009). Heat treatment effect on fatigue crack growth. International Conference on Integrity, Reliability and Failure, Porto/Portugal, 20-24 July.

[8] ASME International. (1990). Metals Handbook, Properties and Selection: Nonferrous Alloys and Special-Purpose Materials, Tenth edition, ASM International.