VOL. 11, NO. 5, MARCH 2016 ISSN 1819-6608
ARPN Journal of Engineering and Applied Sciences

www.arpnjournals.com

THE BANDPASS RC-LINKS OF SIGE INTERFACE FILTERS WITHOUT COUPLING CAPACITORS WITH HIGHER ATTENUATION IN THE RANGE OF PRERESONANCE FREQUENCIES

Nikolay Nikolaevich Prokopenko, Alexander Igorevich Serebryakov, Ilia Viktorovich Pakhomov and Nikolay Vladimirovich Butyrlagin
Don State Technical University, Rostov-on-Don, Russia
E-Mail: nbutyrlagin@mail.ru

ABSTRACT

The advanced circuit engineering principle of construction of the low-sensitive CMOS selective amplifiers (SA) of HF and SHF ranges and interface ICs is developed. The suggested solutions provide the possibility of the cascade connection of several SAs without separating capacitors and additional circuits of matching of the static mode. The considered SAs are characterized by the potential possibility of the choice of resistances of the frequency setting circuit in a wide range of the rating values. The suggested architecture of SA in contrast with the well-known ones reduces the asymptotic attenuation of signals not only in the traditional sphere of high-frequency range but also in the sphere of low-frequency one (up to -70 dB) without additional separating capacitors. The results of the mathematical analysis and computer simulation of SA on the components of SiGe technological process SG25H1 are given.

Keywords: selective amplifier, RC-filter, amplitude-frequency response, bandwidth, Q-factor, parametric sensitivity, SHF range, asymptotic attenuation.

INTRODUCTION

The IP-modules of the elementary selective amplifiers (SA) are basic parts of the cascade bandpass filters of high order of various communication systems. The main requirements to their properties are: the realization of the necessary Q-factor (Q) and frequency of quasiresonance (f_0), and also the possibility of cascading without additional circuits of matching of the static level and separating capacitors.

The use of the circuits of *Gm*-convertors [1-4, 15] as active elements of these SAs within the limits of the traditional structures doesn't reduce the parametric sensitivity of f_0 to the conversion transconductance *Gm* and requires relatively big values of *Gm* for the realization of Q-factor.

The use of the bipolar transistors for increasing of *Gm* or transfer to the operation amplifiers (OA) [5-6] (even within the limits of the optimal structures [7] with regard of the parametric sensitivity) doesn't reduce the asymptotic attenuation of SA not only in the traditional high-frequency range but also in low-frequency one.

The well-known modifications of SAs [8, 9, 10] of the reviewed group have significant restrictions on the value of resistances of frequency setting resistors due to their influence on the static mode. This limits the spheres of application of SAs on the frequency range.

In this paper the new principle circuit of the selective amplifier with minimal parametric sensitivity f_0, free of these drawbacks, is suggested for the realization within the limits of SiGe technologies.

THE PROPERTIES OF THE BASIC CIRCUIT

To realize the bandpass filter of the second order at the restrictions to the consumption current and the number of the used components the basic circuit of SA [11] based on n-p-n SiGe bipolar and CMOS transistors (Figure-1) [12, 13, 14] is developed.

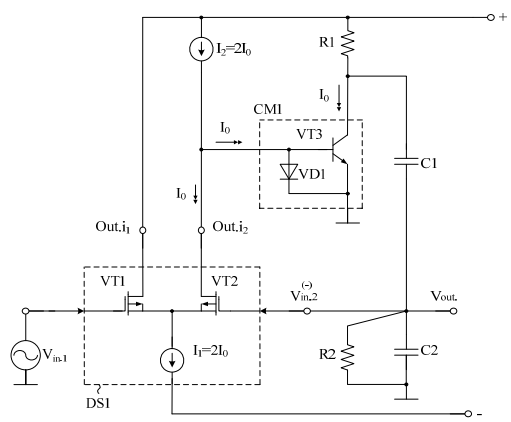

Figure-1. The basic architecture of SA with higher signal attenuation in the range of preresonance frequencies [11].

In the circuit of Figure-1 the input differential stage DS1 is realized on the transistors VT1 and VT2 and also on the current source I_1. The resistor $R1$ sets the static mode of the current mirror CM1, which is made according to the traditional circuit and includes p-n junction VD1 and the transistor VT3, the base of which is the current input CM1.

VOL. 11, NO. 5, MARCH 2016 ISSN 1819-6608
ARPN Journal of Engineering and Applied Sciences

The input signal source v_{in} changes the currents of the differential pair realized on the transistors VT1 and VT2. The change of the drain current of the transistor VT2 causes the change of the input current of the current mirror CM1 and collector current of the bipolar transistor VT3. The nature of the collector load of this transistor formed by the resistors $R1$, $R2$ and capacitors $C1$, $C2$, causes the frequency dependence of the voltage on the resistor $R2$ of the corresponding amplitude frequency characteristic and phase frequency characteristic of the selective amplifier. Therefore, the connection of the output circuit of SA to the transistor gate VT2 realizes the feedback loop in the circuit, the frequency dependence of which corresponds to the characteristic of the bandpass filter. The amount of this feedback (F) is maximal only on one frequency which corresponds to the frequency of quasiresonance (f_0) of SA. Due to the recovery properties of this F the Q-factor (Q) and the coefficient of amplification of SA (K_0) increase without change of the frequency of quasiresonance f_0.

The results of the simulation of the amplitude frequency characteristic and phase frequency characteristic of SA of Figure-1 in the Cadence environment are given in Figure-2.

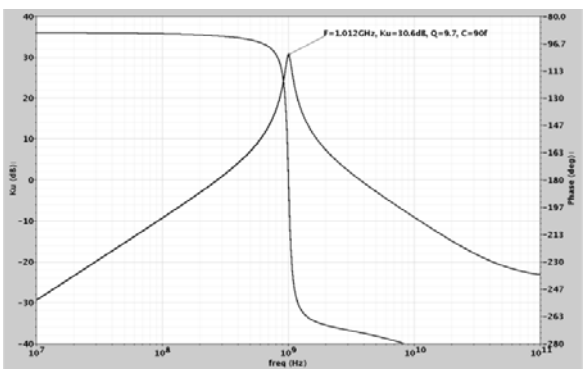

Figure-2. The amplitude frequency characteristic and phase frequency characteristic of SA when R2=2.5 kΩ, C1=C2=90 fF.

The complex transfer ratio of SA of Figure-1 as the relation of the out voltage $v_{out.}$ to the input voltage v_{in} is defined by the formula which can be obtained with the help of the methods of analysis of the electronic circuits

$$K(jf) = \frac{v_{out}}{v_{in}} = K_0 \frac{jf\frac{f_0}{Q}}{f_0^2 - f^2 + jf\frac{f_0}{Q}}, \quad (1)$$

where f – is the frequency of the input signal; f_0 - is the frequency of quasiresonance of the circuit; Q – is the Q-factor of the pole; K_0 – is the voltage gain of the circuit on a frequency of the quasiresonance f_0. Besides,

$$f_0 = \frac{1}{2\pi\sqrt{C_1 C_2 R_1 R_2}}, \quad (2)$$

$$Q^{-1} = d_p = \sqrt{\frac{R_2}{R_1}} + \left(\sqrt{\frac{C_2}{C_1}} + \sqrt{\frac{C_1}{C_2}}\right) + \sqrt{\frac{C_2}{C_1}}\sqrt{\frac{R_1}{R_2}}(1 - SR_2), \quad (3)$$

$$K_0 = Q \cdot g_m \sqrt{R_1 R_2}\sqrt{\frac{C_2}{C_1}}, \quad (4)$$

where $g_{m1} \approx g_{m2} \approx g_m$ is the transconductance of the resistors VT1 and VT2 of the input differential stage DS1;

$$g_m = \frac{g_{m1} g_{m2}}{g_{m1} + g_{m2}} K_{i1} \approx \frac{g_m}{2}; \quad (5)$$

$K_{i1} \approx 1$ - is the current transfer ratio of the current mirror CM1.

From the formula (4) it follows that regardless the realized value f_0 (formula 2) it is possible to tune Q for the set value by changing of the equivalent transconductance g_m. For example in the circuit of Figure-1 it is easily realized by the current change $I_1=2I_0$, as the transconductance of the transistors $g_{m1} \approx g_{m2} \approx g_m$ is proportional to the current source $I_{s.1} = I_{s.2} = I_0 = 0.5I_1$.

For the case when the input differential stage DS1 is realized on the bipolar transistors (e.g. in the circuit of Figure-1) the equivalent transconductance g_m (5) is defined by the formula

$$g_m = \frac{K_{i1}}{r_{e1} + r_{e2}}, \quad (6)$$

where $r_{e1}=r_{e2}=r_e$ – is the resistance of the emitter junctions of the transistors VT1 and VT2.

Taking into account the dependences $r_e = \varphi_m / I_e$ when K_{i1}=1 the formula (6) can be simplified:

$$g_m \approx \frac{I_0}{2\varphi_m}, \quad (7)$$

where $\varphi_T = 26$ mV – is the temperature voltage; I_0=0,5I_2 - is the half of the impedor current I_2.

Consequently, it is possible to control the value of the Q-factor Q by changing the current I_0.

Besides, the important additional property of the reviewed circuit is the relatively small effect of the parasitic capacitances of the transistors VT1, VT2 on the basic parameters f_0 and Q. Actually; it is possible to show that the relative changes of the basic parameters of the part of Figure-1 are:

VOL. 11, NO. 5, MARCH 2016 ISSN 1819-6608
ARPN Journal of Engineering and Applied Sciences

$$\frac{\Delta f_0}{f_0} = -\frac{1}{2}\left(\frac{C_{in}}{C_2} + \frac{C_{in}}{C_1} + \frac{C_s}{C_1}\right), \quad (8)$$

$$\frac{\Delta d_p}{d_p} = Q\sqrt{\frac{R_1}{R_2}}\sqrt{\frac{C_{in}}{C_1}}, \quad (9)$$

where C_{in} – is the input capacitance of the transistor VT2; C_s – is the capacitance on the substrate of the collector circuit of the transistor VT3 (Figure-1).

The structural properties of the circuit of Figure-1 render possible to optimize the parameters of the filters. If we choose C_1=C_2=C, then the optimal relation is $(R_2/R_1)_{opt}$=1/2, and then the condition is realized at the minimal value of the equivalent transconductance:

$$Q^{-1} = d_p = \sqrt{2}(2 - g_m R_2). \quad (10)$$

In this case the sensitivities of the basic parameters of the circuit to the instability of the passive elements of the circuit are optimized:

$$S_{R_1}^{d_p} = -S_{R_1}^{Q} = \frac{Q}{\sqrt{2}} g_m R_2; \; S_{R_{18}}^{d_p} = -S_{R_2}^{Q} = -\frac{3Q}{\sqrt{2}} g_m R_2; \quad (11)$$

$$S_S^{d_p} = -S_S^{Q} = -Q\sqrt{2} g_m R_2; \quad (12)$$

$$S_{C_2}^{d_p} = -S_{C_1}^{d_p} = -S_{C_2}^{Q} = -S_{C_1}^{Q} = Q\sqrt{2}(1 - g_m R_2); \quad (13)$$

$$S_{C_2}^{f_0} = S_{C_1}^{f_0} = S_{R_1}^{f_0} = S_{R_2}^{f_0} = -\frac{1}{2}. \quad (14)$$

In the suggested circuit [11] (Figure-1) the asymptotic attenuations on the low frequencies are small due to the absence of the current changes transmission of the transistor source VT1 и VT2 to the transistor gate circuit VT2, i.e. to the output of the device.

THE SELECTIVE AMPLIFIER ON THE BIPOLAR TRANSISTORS

To decrease the direct transmission of the input signal v_{in} through the circuit "the transistor base VT1 - the transistor emitter VT1- the transistor emitter VT2- the transistor base VT2", which depends upon their current gains of the base of these transistors it is necessary to use the Darlington's pairs (Figure-3) ($\beta = 50 \div 200$), in the bipolar base of the elements of the circuit of SA of Figure-1.

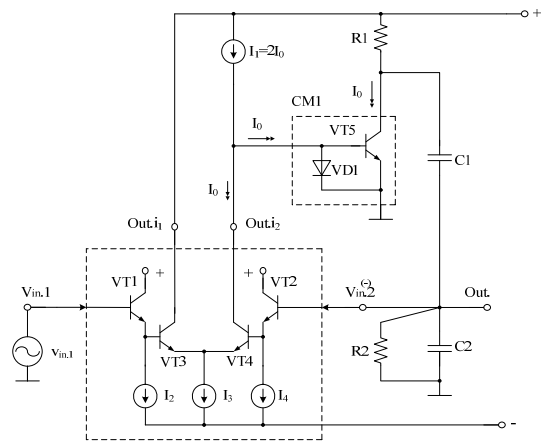

Figure-3. The circuit of SA with higher attenuation in the range of low frequencies on the base of the input Darlington's DS [11].

In Figure-4 the graphic chart of the frequency dependence of the coefficient of amplification of the circuit of SA of Figure-3 is given at the following parameters of the elements C_1=2,1p, C_2=1,9p, R_1=1 kΩ, R_2=100Ohm. The Q-factor Q=10 whereby is realized.

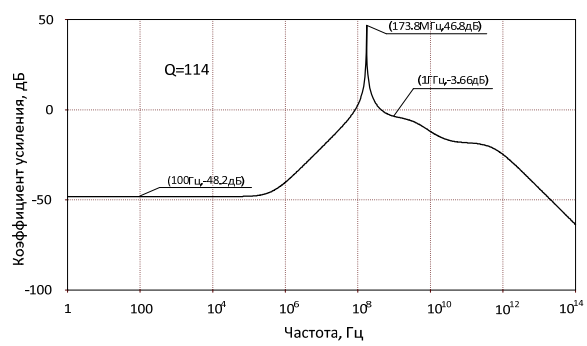

Figure-4. The frequency dependence of the coefficient of amplification of the circuit of Figure-3.

THE BASIC MODIFICATIONS OF SAS ON CMOS-TRANSISTORS

The modified circuits of SAs of Figure-1, which are also among the low-sensitive ones, are given in Figure-5.

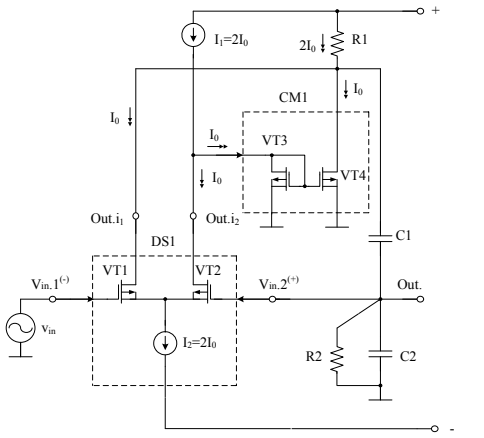

a)

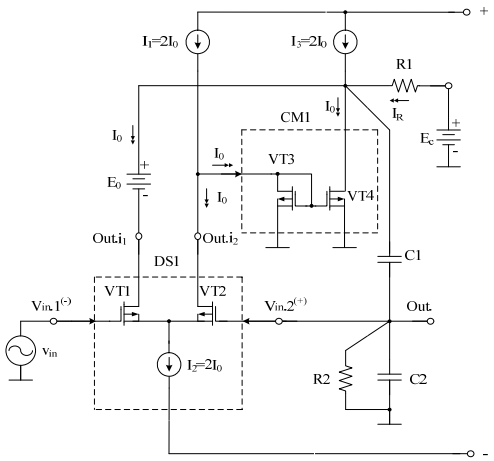

b)

Figure-5. The modified circuits of SAs.

The results of the computer simulation of SA of Figure-5 are given in Figure-6.

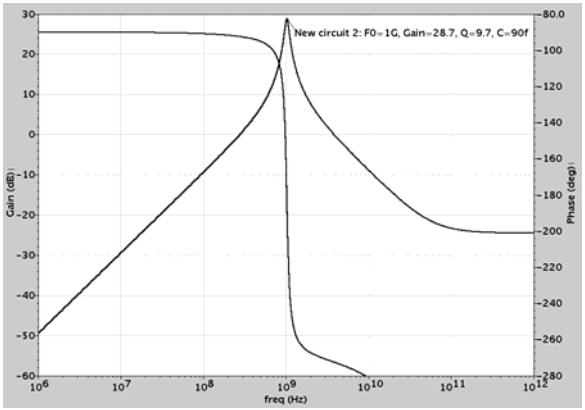

Figure-6. The amplitude frequency characteristic and phase frequency characteristic of new SA when $R2$=2.5 kΩ, $C1$=$C2$=90 Ff.

Consequently, the suggested circuit engineering principles of the filters are characterized by the high values of the coefficient of amplification K_0 on a frequency of quasiresonance f_0, by the higher values of Q-factor and also by higher signal attenuation in the range of preresonance frequencies at low parametric sensitivity.

CONCLUSIONS

The proposed circuit of SA and its main modifications render possible to solve a number of practical problems of signal filtering within the limits of SiGe technologies [9-11, 16]:

1. In the circuit of SA it is possible to eliminate the additional circuits of matching of the static modes at DC current which is important when constructing the bandpass filters of high order.
2. The absence of the input separating capacitors has a favorable impact on the frequency range of SA and decreases the occupied area of the chip.
3. In the suggested circuits the additional restrictions (which are not connected with the realization of the parameters of f_0 and Q) are attenuated on the numerical values of the resistances of the frequency setting resistors. As a result it renders possible to realize fuller parametric optimization on the criterion of parametric sensitivity.
4. The proposed circuit solutions of SA provide the noniterative procedure of setting when sacrificing high asymptotic attenuation in low-frequency range ($f << f_0$) and zero mode (constant) input and output voltages of the circuit.
5. It is possible to choose the optimal values of the parameters of the passive components of SA that doesn't require the significant supply voltages.
6. The reviewed circuit solutions of SA are characterized by higher values of the coefficient of amplification and Q-factor and also by comparatively small current pull in contrast with the classical SA based on the SHF operating amplifiers.

ACKNOWLEDGEMENT

This paper was prepared under the project №SP-3341.2015.3 of Russian President's grant for young scientists and the project №16-19-00122 of the Russian Science Foundation.

REFERENCES

[1] A 4 MHz Gm-C Filter with On-Chip Frequency Automatic Tuning. JinKeYao, Baoyong Chi, Zhihua Wang. IEEE International Symposium on Circuits and Systems, 2006, ISCAS 2006. Proceedings - pp. 3814-3817.

[2] A High Q Gm-C Filter for Multi-band Wireless Applications. Zhi-Qiang Gao, Ming-Yan Yu, Feng-Chang I.ai, Yi-Zhehg Ye. The 8th International

Conference on Solis-State and Integrated Circuit Techology, 2006. ICSICT'06. - pp. 1733-1735.

[3] Dual-Output All-Pass Filter Employing Fully-Differential Operational Amplifier and Current-Controlled Current Conveyor. Viera Biolkova, Zdenek Kolka, and Dalibor Biolec. EI.FCO 2011 the 7th International Conference on Electrical and Electronics Engineering, 1-4 December, Bursa, TURKEY. - pp. 319-323.

[4] Low-Power Architecture and Circuit Techniques for High-Boost Wide-Band Gm-C Filters. Manisha Gambhir, Vijay Dhanasekaran, Jose Silva-Martinez, and Edgar Sanchez-Sinencio. IEEE Transactions On Circuits and Systems. 54(3): 458-468.

[5] Prokopenko N., Budyakov A., Schmalz K., Scheytt C., Ostrovskyy P. 2008. Design of Bipolar Differential OpAmps with Unity Gain Bandwidth up to 23 GHz. proceeding of the 4th European Conference on Circuits and Systems for Communications – ECCSC'08. (10-11): 50-53.

[6] Prokopenko N., Budyakov A., Schmalz K., Scheytt C. 2010. RF IP-blocks based on Fully Differential OpAmp for Communication Systems. Problems of Advanced Micro- and Nanoelectronic Systems Development - MES-2010. (1): 583-586.

[7] S.G. Krutchinskiy, N.N. Prokopenko. 2012. High-Frequency Sections of Active Filters of Mixed-Signal SoC Based on Current Amplifiers http://www.hindawi.com/journals/isrn.electronics/2012/319896/.

[8] Krutchinsky S.G., Prokopenko N.N. Budyakov P.S., Butyrlagin N.V. 2014. SiGe Selective Amplifier of Microwave Range with High Asymptotic Attenuation. Proceedings of the 6th International Conference on Computational Intelligence, Communication Systems and Networks. Tetovo, Macedonia Republic. pp. 218-221.

[9] S.G. Krutchinskiy, G.A. Svizev, N.N. Prokopenko, N.V. Butyrlagin. 2013. Controlled Selective Amplifier of Microwave Range. in Microwave and Telecommunication Technology (CriMiCo), 2013 the 23rd International Crimean Conference. pp. 80-81. Available: http://goo.gl/SP8peD Article number 6652617.

[10] Patent RU 2523953, Int. Cl.H03F 3/00. Instrumentation amplifier with resonance amplitude-frequency characteristic. Prokopenko N.N., Krutchinskiy S.G., Svizev G.A., Budyakov P.S.- № 2013106008/08; Date of filing: 12.02.2013; Date of publication: 27.07.2014, Bull. № 21. - 9 p. 516.

[11] Patent RU 2519429 Int. H03F 3/45, H03H 11/00, H03K 5/00. Instrumentation amplifier with the controlled parameters of the amplitude frequency characteristic. Prokopenko N.N., Bugakova A.V., Suvorov V.V. - № 2013110169/08; Date of filing. 06.03.2013; Date of publication: 10.06.2014 (517).

[12] H. Rücker, B. Heinemann, W. Winkler, R. Barth, J. Borngräber and other. 2010. A 0.13 µm SiGe BiCMOS Technology Featuring f_T/fmax of 240/330 GHz and Gate Delays below 3ps. IEEE Journal of Solid State Circuits. 45(9): 1678.

[13] Rakitin V.V. 2007. Integrated Circuits in CMOS - transistors, Textbook. M.: 2007 - 307 p., 1967, pp. 20-23.

[14] I.M. Filanovsky, V.V. Ivanov. 2004. Operational Amplifier Speed and Accuracy Improvement: Analog Circuit Design with Structural Methodology. Kluwer Academiv Publishers, New York, Boston, Dordrecht, London, Moscow. p. 194.

[15] Kobersy, I. S., Khasiyeva, L. G., Yakhina, V. D., Ignatyeva, O. V., Goloshchapova, L. V., Shkurkin, D. V., Sadykova, L. R. 2016. Approaches to implementation of motivation as the complex conditions of increase of efficiency of social and labor relations: International experience. International Review of Management and Marketing, 6(1), 208-217.

[16] Beloglazov Denis, A., Finaev Valery, I., Zargarjan Jury, A., Soloviev Victor, V., Kosenko Evgeny, Y., Kobersy Iskandar, S. (2015). Efficiency of genetic algorithms in intelligent hybrid control systems. ARPN Journal of Engineering and Applied Sciences, 10(6), 2488-2495.