VOL. 11, NO. 8, APRIL 2016 ISSN 1819-6608
ARPN Journal of Engineering and Applied Sciences

www.arpnjournals.com

FLEXIBLE DIPOLE ANTENNA INCORPORATED WITH FLEXIBLE FREQUENCY SELECTIVE SURFACE

S. A. M. Ali, M. Abu, N. R. Mohamad, M. Muhamad and H. Hassan
Centre for Telecommunication Research and Innovation, Faculty of Electronic and Computer Engineering, Universiti Teknikal Malaysia Melaka, Durian Tunggal, Melaka, Malaysia
E-Mail: khalif5086@yahoo.com

ABSTRACT

This paper present a 5.8GHz flexible dipole antenna incorporated with flexible frequency selective surface (FSS). First, the FSS structure, which utilizes the basic hollow cylinder to create the ring is investigated. Fast Film with ε_r=2.7 and t_s=0.13mm is used as a flexible substrate material for both dipole and FSS structures. Then, the dipole antenna is placed closely and parallel above the FSS structure with distance. The dipole antenna achieved for about 2.091dB gain enhancement and optimum return loss (S_{11}) when the antenna is placed 0.5mm above the FSS structure. However the frequency response of the antenna is shifted and evaluated the return loss below than -10dB as the distance between the antenna and the FSS structure is increased. This design structure showed excellent performance when used for wireless communications.

Keywords: dipole antenna, frequency selective surface, fast film, return loss, gain.

INTRODUCTION

The demand of wearable of wearable devices for mobile wireless communication industries are consistently producing devices which are compact, robust, portable, unobtrusive, cost-effective and easy to use (Ramly, Rahim, Jalil, Samsuri and Dewan, 2014). Antenna based on flexible material is one of the promising options to meet these requirements. The corresponding smart technology of wearable antenna plays important role in potentially replacing wired communication networks in the future. This smart technology more lightweight and subsequently this smart technology can be wear in daily life. The wearable antenna is integrated to the flexible material as it is more likely to be adopted by the end users.

Wearable antenna has gaining interest in integrating more functionality into garments has led to extensive development in wireless body centric communication applications. The body centric communication requires the development of adequate antennas that capable to combine the flexibility with robustness and reliability. As the characteristics of body worn antennas are greatly affected by human proximity and motion. Therefore, placing antenna to human body is a critical issue in on-body application to ensure the performance of the antenna not significant degrade by the body (Ramly, Rahim, Samsuri, Jalil, Abdul Majid, Elias and Dewan, 2014).

Recent trends in communications by wide or multi frequency bands of operations have driven the needs of developing antennas with not only fulfilling these bandwidth requirements, but also exhibiting characteristics of low-profile, simple feeding structure and easy for production. Among all the possible antenna structures, dipole based ones are always preferred because of their unique advantageous features of omnidirectional radiation pattern, relatively high energy efficiency and low manufacturing cost. In practice, the performance of an ideal dipole has been widely used as a reference to justify the characteristics of many practical antennaa because its radiation characteristics are superior in terms of polarization purity and patterns. Above characteristics are very difficult to be retained when the antenna structure is altered to broaden its bandwidth. A regular dipole antrenna has an impedance bandwidth of about 10% with reflection coefficient (S11) less than -10dB (Kuo, Chou, Hsu, and Nepa, 2010).

Metamaterials are artificially structure that is realized by setting the metallic material with periodic pattern onto the dielectric substrate. The term that usually been used for metamaterials structure are Artificial Magnetic Conductor (AMC), Frequency Selective Surface (FSS) and Electromagnetic Band Gap (EBG) (Alomainy, Hao and Davenport, 2007). The electromagnetic properties of periodic surfaces have been widely studied nowadays.

Metamaterials have garnered considerable attention for their extraordinary properties in electromagnetism in recent years. The artificial material accomplishes its characteristics (e.g. negative permittivity and negative permeability) by its engineered structure and geometry parameters (Sun, Cheng, Xu, Zhou and Cui, 2008). It offers us an opportunity to achieve properties that cannot be easily realized by natural material. Due to those properties, metamaterials have potential applications in the field of radio frequency components design such as antenna and filter and FSS.

There are many application areas adopting FSS such as telecommunications, antenna design and compatibility (Kim and Choi, 2006)(Teo, Luo and Lee, 2007). FSS are periodic structures in either one or two dimensions (singly or doubly periodic structures) performing a filter operation. They are divided into low-pass, band-pass, band-stop and high-pass filters

depending on their frequency-selective properties. To meet the requirements of practical application purposes, different factors should be considered in the design procedure os FSS, which include the geometry of the FSS element, the conductivity of the FSS conductor, the permittivity of the substrate and the period of the FSS array(Munk, 2000).

This paper will investigate the gain and the reflection of proposed flexible dipole antenna incorporate with and without the flexible FSS structure at 5.8GHz.

FREQUENCY SELECTIVE SURFACE (FSS)

Introduction of FSS

A frequency selective surface (FSS) is a spatial electromagnetic filter, which is defined as a one or two dimensional periodic array of patch elements or aperture elements etched on a dielectric substrate (Schneider and McCann, 2007). The geometries of both patch and aperture elements are shown in Figure-1. The patch element array behaves as a band stop filter and the aperture element array acts as a band pass filter.

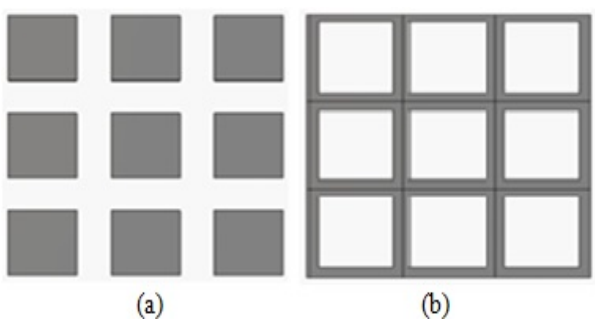

Figure-1. Geometries of (a) patch elements and (b) aperture elements of FSS array (Schneider and McCann, 2007).

FSS is any surface designed as a filter which has typically narrow band and periodic structure. The capacitive and inductive FSS can be realized over the dielectric substrate without the ground plane.

Several arrays and material layers may be combined to produce resonant structures commonly refer as FSS. These surfaces can be applied over wide range of the electromagnetic spectrum, starting from below ultra-high frequency (UHF) to the far-infrared regions. In microwave regions, periodic surfaces have been used as phased array antennas, artificial dielectrics, diffraction gratings, frequency selective reflector for antenna, dichroic antennas, angular filters and spatial filters.

The FSS is basically a filter designed to reveal different reflection and transmission properties as a function of frequency. Normally the FSS consists of slot element is composed of arbitrarily shaped perforations in a metallic screen which support magnetic currents. Surfaces comprised of wire elements act as band stop filters and surfaces comprised of slot elements act as band pass filters (Kohlgraf, 2005).

The frequency behaviour of the FSS is entirely determined by the geometry of the surface in one period (unit cell), the size of the FSS, the way the surface is exposed to the electromagnetic wave (incidence angle of the incoming wave), substrate parameters, inter-element spacing and material used. To achieve a certain spectral response for the FSS, many parameters can be adjusted such as the dimension of periodicity, element shape, dielectric thickness and constant, and number of periodic screen (Hu, 2012).

Design and consideration

The FSS layers configuration are shown in Figure-2, involved only substrate and FSS patch layers. The materials used as a substrate is Fast Film with thickness, t_s is 0.13mm and dielectric constant, ε_r is 2.7. The material used for the FSS patch is Perfect Electromagnetic Conductor (PEC) with thickness, t_p is 0.035mm. The analysis and design of FSS has been carried out in Circuit Simulation Technology (CST) Microwave Studio.

Figure-2. FSS layers configuration.

This structure has a single ring on its backing substrate. Construction of the geometry itself is simple which a substrate is defined using a brick primitive object, and then a hollow cylinder can be used to create the ring. There are also a square ring at the edge of the substrate with two bridges connected between the square ring and the ring as shown in Figure-3.

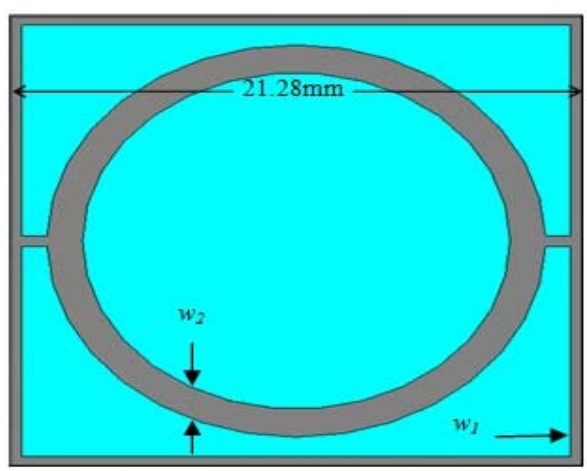

Figure-3. A unit cell of 5.8GHz FSS (the square ringpatch size, 21.28mm with slot width, w_1=0.4mm and the ring with slot width, w_2=1.33mm).

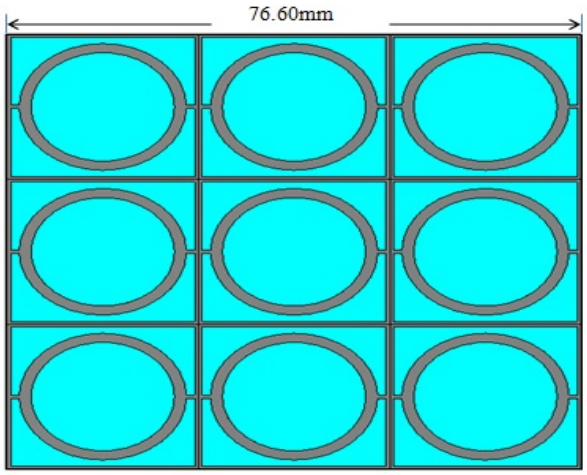

Figure-4. FSS periodical structure (3x3 array).

The primary interest in this case is the S-parameter results, which represent the reflection and transmission through the FSS. The co-polar reflections and transmissions of both modes are almost identical due to the symmetrical rectangular slot.

The curves of transmission and reflection coefficient of FSS unit cell shown in Figure-5. The transmission for about -68.63dB and the reflection is almost complete for about -0.002dB are almost completely blocked at frequency response, 5.8GHz. According to the thickness of Fast Film material, t_s=0.13mm, thus a bendable material which suitable as a flexible FSS structure.

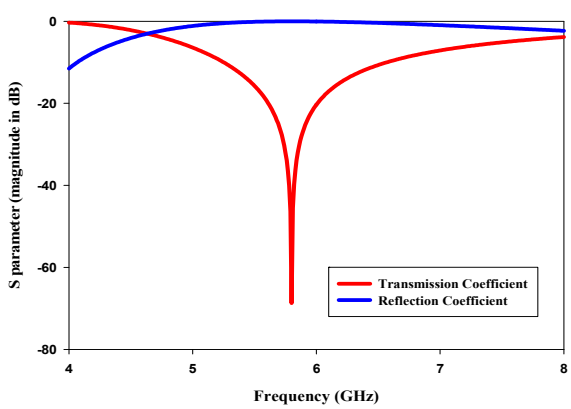

Figure-5. Transmission and reflection coefficient curves of FSS unit cell structure.

Figure-6 shows the curves of transmission and reflection coefficient of FSS periodical structure (3x3 array). The transmission is almost completely blocked at frequency response, 5.8GHz as seen from the S_{21} for about -35.60dB and the reflection is almost complete at S_{11} for about -1.56dB.

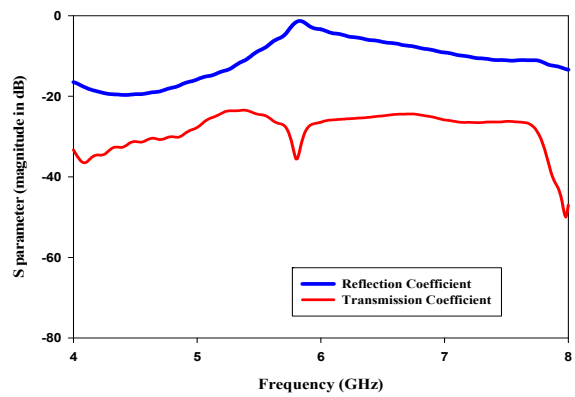

Figure-6. Transmission and reflection coefficient curves of FSS periodical structure (3x3 array).

WEARABLE DIPOLE ANTENNA

Introduction of wearable dipole antenna

Compact size and low-cost printed antennas with wideband characteristic are desired in modern communication systems. For expanding the bandwidth, the arms of dipole antenna are designed with fat wire or planar (Li, 2008). Many designers have tried to various ways to improve the structure of traditional dipole antennas.

A seriese fed printed strip dipole is proposed in (Tefiku nad Grimes, 2000). Its bandwidth is greater than 30% for VSWR<1.5. Reference (Ma and Jeng, 2005) presents a tapered-slot feeding structure, curve shaped dipole antenna. It may cover from 3.1GHz to 10.6GHz for VSWR<2. There are some types of wideband printed dipoles which are square shape (Park and Song, 2006), circle shape (Lu, Yang and Zheng, 2007), bow-tie (Zheng, Kishk, Glisson and Yakovlev, 2005) and elliptical shape (Zhang, Xu and Wang, 2008) that have been presented. Reference (Moa, Chan, Hsu and Chang, 2001) introduces a wideband printed dipole which has complex structure with operating bandwidth reaches 4.7%.

Design and consideration

The proposed dipole antenna is involved only substrate and FSS patch layers. The materials used as a substrate is Fast Film with thickness, t_s is 0.13mm and dielectric constant, ε_r is 2.7. The Fast Film material is used because it is a bendable material which suitable as a flexible dipole antenna. The material used for the dipole antenna patch is PEC with thickness, t_p is 0.035mm. Port of the proposed dipole antenna is used dicrete port with 50Ω impedance. The analysis and design of the dipole antenna has been carried out in CST Microwave Studio.

This structure is almost the same with the FSS structure which has a single ring on its backing substrate. Construction of the geometry itself is simple which a substrate is defined using a brick primitive object, and then a hollow cylinder can be used to create the ring. There is also a square ring on the exterior of the ring with

two bridges connected between them. The substrate size is superior than the dipole antenna patch size. There a discrete port with 50Ω impedance at the center bottom of the square ring as shown in Figure-7.

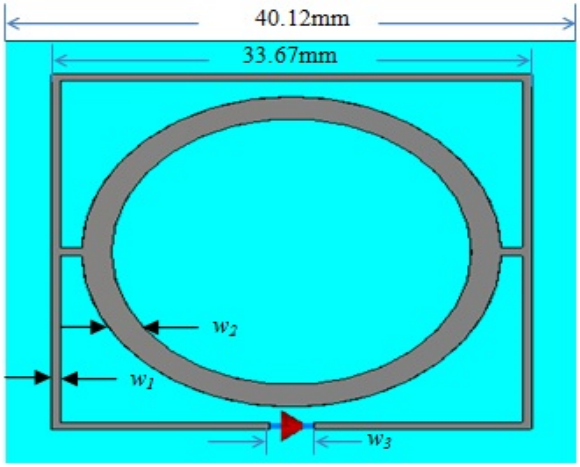

Figure-7. Proposed dipole antenna geometry (the slot width of square ring patch, w_1=0.64mm, the ring with slot width, w_2=2.13mm and the dipole antenna with slot width, w_3=2.00mm).

RESULTS AND DISCUSSION

Simulated S_{11} of the proposed dipole antenna is shown if Figure-8. The antenna evaluated for about -17dB return loss at 5.8GHz.

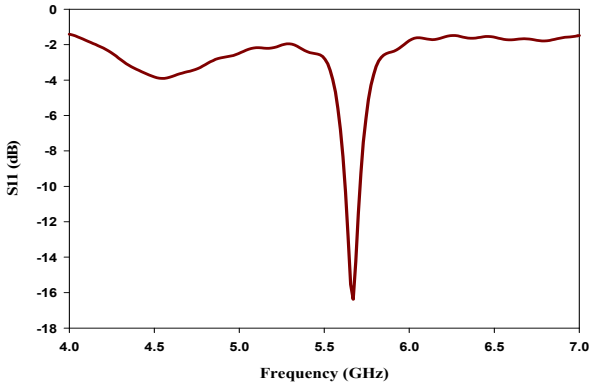

Figure-8. Simulated S_{11} of the proposed dipole antenna design.

WEARABLE DIPOLE ANTENNA INCORPORATED WITH AND WITHOUT FSS

Design and consideration

The proposed dipole antenna is placed at a distance "*d*" (mm) above the FSS periodical structure (3x3 array) as shown in Figure-9. The wave radiated towards the FSS is reflected back.

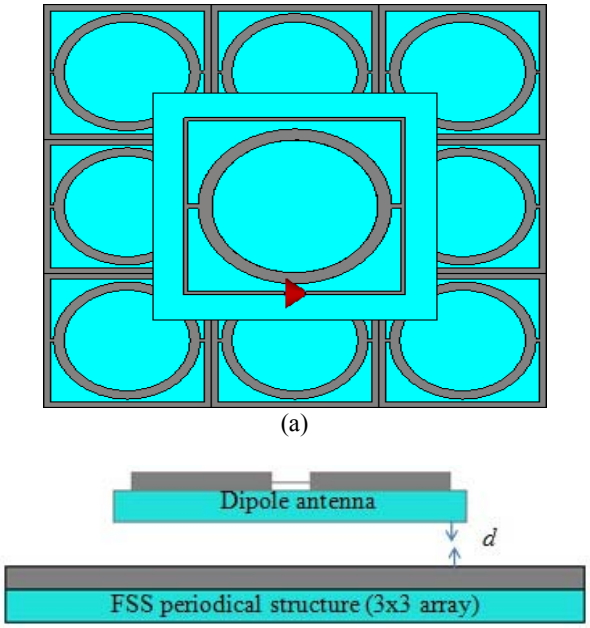

Figure-9. Proposed dipole antenna over FSS periodical structure (3x3 array) (a) front view (b) side view.

The gap between the proposed dipole antenna and the FSS periodical structure (3x3 array) has been varied from 0.5mm to 15.5mm and the corresponding results are shown in Figure-10. It is noted that *d*=0.5mm provides the optimum results of return loss. However the frequency response of the antenna is shifted and evaluated the return loss below than -10dB as the distance between the antenna and the FSS structure is increased.

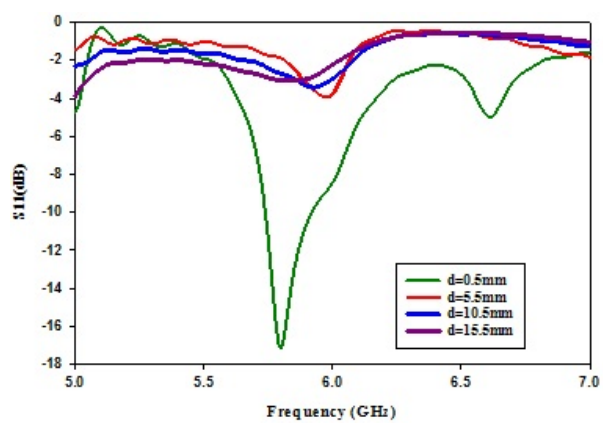

Figure-10. Simulated S_{11} of the proposed dipole antenna at different distance to FSS periodical structure (3x3 array).

Simulated gain of the dipole antenna with and without FSS periodical structure (3x3 array) shown in Table-1. The gain of the dipole antenna is increased by 2.901dB while incorporate with the FSS structure. The

wave radiated towards the FSS is reflected back. It will add up in the opposite direction to the outgoing wave radiated from the antenna. The gain of the antenna will increase when two waves components add up in-phase, giving rise to constructive interference. While the simulated radiation pattern of the dipole antenna incorporated with and without FSS structure is shown in Figure-11.

Table-1. Simulated gain of the dipole antenna with and without FSS periodical structure (3x3 array).

	Gain (dB)
Antenna without FSS	1.073
Antenna with FSS (*d*=0.5 mm)	3.974

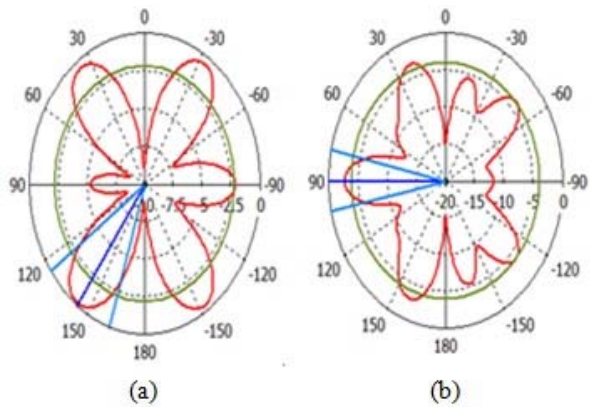

Figure-11. Simulated radiation pattern of dipole antenna incorporated (a) without FSS (b) with FSS structure.

CONCLUSIONS

A flexible dipole antenna incorporate with flexible FSS structure has been demonstrated. Both structures used Fast Film as a substrate which is a bendable material contribute to flexible structure. 2.091dB gain enhancement and optimum return loss are evaluated as the FSS structure is placed 0.5mm at the back of the antenna. However the frequency response of the antenna is shifted and evaluated the return loss below than -10dB as the distance between the antenna and the FSS structure is increased. So, future works is needed to apply this design as wearable applications.

ACKNOWLEDGEMENTS

The authors wish to thank the Ministry of Science, Technology and Innovation (MOSTI) and Center for Research and Innovation Management (CRIM) of Universiti Teknikal Malaysia Melaka (UTeM) for the support of this work under the grant number 06-01-14-SF0111L00019.

REFERENCES

[1] Alomainy, A., Hao, Y. and Davenport, D. M. (2007) Parametric Study of Wearable Antenna with Varying Distance from the Body and Different on-Body Positions. Antennas and Propagation for Body-Centric Wireless Communications and Institution of Engineering and Technology (IET) Seminar on IEEE, pp.84—89.

[2] Hsu, W. H., Jheng, H. Y., Pan, S. C. and Tang, C. L. (2014). Design of an Omnidirectional and Haigh Gain Dual Mode Dipole Antenna. Antenna and Propagation and 19th International Symposium on Antennas and Propagation (ISAP), 2014 19th International Conference on. IEEE, pp.481--482.

[3] Hu, D. (2012). 3D Frequency Selective Surface. Master Thesis, University of Sheffield at United Kingdom.

[4] Kim, D. H. and Choi, J. I. (2006). Design of a multiband frequency selective surface. Electronics and Telecommunications Research Institute (ETRI) Journal, pp.506—508.

[5] Kohlgraf, D. C. (2005). Design and Testing of a Frequency Selective Surface (FSS) Based Wide-Band Multiple Antenna System. Degree Thesis, University of Ohio State at United State.

[6] Kuo, F. Y., Chou, H. T., Chou, H. H. and Nepa, P. (2010). A Novel Dipole Antenna Design with an Over 100% Operational Bandwidth. Antenna and Propagation and Journals and Magazines on IEEE, pp.2737—2741.

[7] Li, J. Y. (2008). Compact Size Dipole Antenna. Electronic Letters and Institution of Engineering and Technology (IET) Journals & Magazines on IEEE, pp.1229—1231.

[8] Lu, Y. M., Yang, X. X. and Zheng G. X. (2007). Analysis on a Novel Wide Bandwidth Antenna of Double Printed Circular Disk. Microwave and Optical Technology Letters, pp.311--314.

[9] Ma, T. G. and jeng, S. K. (2005). A Printed Dipole Antenna with Tapered Slot Feed for Ultrawide-Band Applications. Antenna and Propagation and Journals and Magazines on IEEE, pp.3833--3836.

[10] Mao, S. G., Chan, C. H., Hsu, C. I. G. and Chang, D. C. (2001). A Series-Fed Printed-Bowtie Antenna with Broadband Characteristics and End-Fire Radiation. Asia Pacific Microwave Conference (APMC) and IEEE Conference Publications on IEEE, pp.926—929.

[11] Munk, B. A. (2000) Frequency Selective Surface Theory and Design. 1st ed. N.Y.: John Wiley & Sons.

[12] Park, Y. J. and Song, J. H. (2006). Development of Ultra Wideband Planar Stepped-Fat Dipole Antenna. Microwave and Optical Technology Letters, pp.1698—1701.

[13] Ramly, N. J., Rahim, M. K. A., Jalil, M. E., Samsuri, N. A. and Dewan, R. (2014). Leaf-Shaped Dual Band Antenna for Wearable Application. Antenna and Propagation and 19th International Symposium on Antennas and Propagation (ISAP), 2014 19th International Conference on. IEEE, pp.483--484.

[14] Ramly, N. J., Rahim, M. K. A., Jalil, M. E., Samsuri, N. A. and Dewan, R. (2014). Leaf-Shaped Dual Band Antenna Textile Performance for on-Body Application. Applied Electromagnetics and 6th Asia-Pacific Conference on Applied Electromagnetic (APACE), 2014 6th International Conference on. IEEE, pp.257--260.

[15] Schneider, S. W. and McCann, J. F. (2007) Frequency Selective Surface. Antenna Engineering Handbook, Volakis, J. L U.S.A: McGraw-Hill.

[16] Sun, Q. H., Cheng, Q., Xu, H. S., Zhou, B. and Cui, T. J. (2008). A New Type of Band-Pass FSS Based on Metamaterial Structures. Metamaterials and International Workshop on Metamaterials, 2008 International Workshop on IEEE, pp.267—269.

[17] Tefiku, F. and Grimes, C. A. (2000). Design of Broadband and Dual-Band Antennas Comprised of Series-Fed Printed-Strip Dipole Pairs. Antenna and Propagation and Journals and Magazines on IEEE, pp.895—900.

[18] Teo, P. T., Luo, X. F. and Lee, C. K. (2007). Frequency Selective Surfaces For GPS and DCS1800 Mobile Communication, Part 1: Quad-Layer and Single-Layer FSS Design. Microwave Antenna Propagation and Institution of Engineering and Technology (IET) Journals and Magazines on IEEE, pp.314—321.

[19] Zhang, J. P., Xu, Y. S. and Wang, W. D. (2008). Microstrip-Fed Semi-Eliptical Dipole Antennas for Ultrawideband Communications. Antenna and Propagations and IEEE Transactions on Antenna Propagation on IEEE, pp. 241—244.

[20] Zheng, G., Kishk, A. A., Glisson, A. W. and Yakovlev, A. B. (2005). A Broadband Printed Bow-Tie Antenna with a Simplified Balanced Feed. Microwave and Optical Technology Letters, pp.534--536.