VOL. 11, NO. 10, MAY 2016 ISSN 1819-6608
ARPN Journal of Engineering and Applied Sciences

www.arpnjournals.com

DEVELOPMENT OF LOW-COST ROBOTIC HANDS FOR INTRODUCTION TO MECHATRONICS ENGINEERING COURSES

Muhammad Aminuddin Anwar Ali, Norsinnira Zainul Azlan and Kamil Alif Mohd Safian
Department of Mechatronics Engineering, Kulliyyah of Engineering, International Islamic University Malaysia, Jalan Gombak, Kuala Lumpur, Malaysia
E-Mail: anwarbp91@gmail.com

ABSTRACT

Mechatronics engineering is a broad discipline involving the integration of mechanical engineering, electrical engineering, telecommunications engineering, control engineering and computer engineering. It is well-known that laboratory or hands-on works enhance the learning process in this class. This study proposes the development of low-cost anthropomorphic robotic hands, namely the Spring Hand and EMG Hand for the introduction to mechatronics engineering courses. The robots have a close physical appearance as human hand and the utilization of the robotic hands in learning basic mechatronics concepts will make the studying process more fun and spark the students' interest. The developed robotic hands are low-cost and incorporated with infrared, force and muscle sensor, Arduino UNO board and servomotors. Experiments results from the proposed robotic hand are presented in this paper.

Keywords: robotics Hand, EMG- signals, education, low-cost, anthropomorphic, spring mechanism.

INTRODUCTION

Mechatronics engineering is a broad discipline involving the integration of mechanics with electronics fields through intelligent computer control [1, 2]. Dinsdale and Yamazaki[3] defined mechatronics as "the synergistic integration of fine mechanical engineering with electronics and intelligent computer control in the design of products and manufacturing processes". The term was originally introduced by Tetsuro Mori, an engineer in Yaskawa Electric Corporation, Japan and was registered as a trademark in 1971[4]. Some examples of mechatronics products include mobile robots, robotic arms, autofocus camera, optical disc drive, elevator and anti-lock braking system. All these applications basically consist of sensors to acquire the stimulus from the environment, controllers to make decision based on the program written and actuators to actuate the system.

Numerous mechatronics engineering program are currently offered to the students in the universities across the world. The program, among others aims in preparing the graduates with the knowledge and skills to overcome the problems and challenges in the field. By this, they will be able to develop successful careers in the area associated with the analysis, design, development, implementation and advanced mechatronics systems [5].

Introduction to mechatronics engineering courses can be conducted at a lower education level to provide the students with the basic mechatronics engineering knowledge and spark their interest in the field. It is well-known that laboratory or hands-on works including the one on robotics enhance the learning process in this class. The students are able to get a clear picture and relate the lessons that they studied in the class to the real engineering applications. Existing robots for education include LEGO Mindstorm [6], Nao [7], Khepera [8] and Bioloid [9]. However, most of these systems are expensive.

As an alternative, this study proposes the development of low-cost robotic hands for introduction to mechatronics engineering courses, targeted for the utilization of students between 7 to 15 years old. The hands are anthropomorphic and have a close appearance as humans. Human hand is fascinating with complex structure and high dexterity, where each phalange joints acts as an independent revolute joint driven by its own muscle in the forearm [10].

Two types of robotics hand are proposed in this study, which are the Spring Hand and EMG Hand. Each of the hand has 3 degree of freedom (DOF) and exhibits basic human hand operation. Infrared sensor, Force Resistive Sensors (FSR), Muscle Sensor Kit, servo motors and Arduino UNO microcontroller board are incorporated in the hardware design. Electromyography signals are collected from a healthy human hand to drive the EMG Hand. The robotic hands are low-cost and the students will be able to learn basic mechatronics concept from the robots that imitate their own hand. This will make the learning more fun and sparks their interest in the field, and therefore leads them to engage in the learning process better. This paper is organized as the following: Section 2 describes the conceptual and hardware design of the robotics hand; the experiment that can be conducted and discussion are presented in Sections 3 and 4 respectively; and finally conclusion is drawn in Section 5.

CONCEPTUAL AND HARDWARE DESIGN

Spring hand

The hardware design of Spring Hand is shown in Figure-1. The physical appearance of the hand is designed to be close to humans, with the ratio of the robotic hand's size compared to a human hand is equal to 1.2:1. The Spring Hand consists of five fingers with different lengths. The middle finger is the longest with 95 mm length. The

index finger and ring finger have same the lengths which is 85mm, while the thumb and the little are 75 mm long.

The Spring Hand is designed to accomplish grasping and fingertip pressing tasks so that the students will be able to learn about different operation of the motors in executing various tasks. Each robotic finger is constructed with a spring and bones made of ABS plastics, using 3D printer. Spring is chosen so that the finger is flexible and possesses self-adaptability with wide range of objects' shape. The finger bones are incorporated to enable a more stable pressing operation on the objects. The fingers are actuated by three servo motors, installed in the palm and forearm. Servo motor 1 is used to pull the cable attached to the thumb. Servo motor 2 actuates the index finger and Servo motor 3 bends the remaining three fingers by pulling the cables that connect the fingers to the motor.

An Arduino UNO is utilized as the microcontroller board to acquire the input from the sensors and controlling the motion of the servo motors. Two sensors are incorporated in the hardware development for automatic operation of the hand, which are the infrared proximity sensor (IR sensor) and Force Sensitive Resistor (FSR). The IR proximity sensor, which provides digital inputs, is used in detecting the presence of an object to be grasped under the palm without any physical contact. It is connected directly to the digital input pin of the Arduino UNO. The FSR, which provides analog inputs, is connected to a voltage divider circuitry. The sensor measures the force exerted by the robotic finger on various object with different stiffness. The voltage to the sensors is supplied from the Arduino UNO and the servo motors are connected to the external power supply in parallel. The complete electrical connection of the Spring Hand is illustrated in Figure-2.

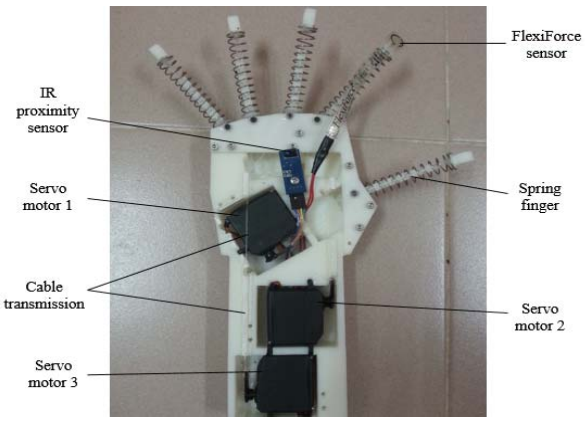

Figure-1. Spring hand hardware.

EMG hand

In the EMG Hand, the Electromyography (EMG) signal from the human hand muscle is collected to provide the input in driving the robotic hand motion. Surface electrode will be used to acquire the EMG signal since this type of electrode is safer and easier to be placed on the hand surface. The acquired raw EMG signal will go through amplification, rectification, filtering, feature extraction and classification before being fed as an input for the robotic hand motion as shown in Figure-3.

Since the raw EMG signal from hand muscle is too small, which is between -5mV to 5mV it needs to be amplified. The signal also has to be filtered since it is usually mixed with the different types of noise that may come from the equipment, electromagnetic radiation and moving artifacts. In this work, these processes are done using a Muscle Sensor V3 Kit.

Figure-4 shows the circuit of the Muscle Sensor V3 Kit connected to an analog input pin of an Arduino UNO in acquiring EMG signals. One of the advantages of this sensor kit is it can be used directly with a microcontroller board such as Arduino Mega 2560 or Arduino UNO. The output of the Muscle Sensor is not a raw EMG signal, but rather an amplified, rectified and filtered signal.

Although a more complex feature extraction and classification methods can be implemented, in this study a simple technique is applied for a simpler and faster learning process for the students. In this work, two categories of hand motion are considered, which are opening and closing of whole hand, and the opening and closing of the thumb and index finger only. Therefore, similar to the Spring Hand, the EMG Hand is actuated by 3 motors, where each motor actuates the thumb, index finger and the rest of the three fingers.

Based on the experiment conducted, the amplitude of the processed EMG signal is sufficient in distinguishing the relaxing state, whole hand, and thumb and index finger closing and opening movements. Therefore, the feature is utilized to classify the hand motions in this work. The robotic hand moves according to the actual human hand motion as programmed by the students. However, the feature extraction and classification method can be further extended to incorporate more hand motions and advanced methods for a higher level courses or syllabus.

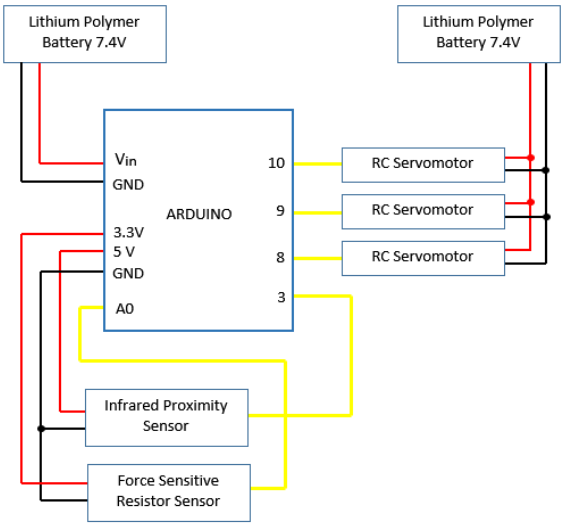

Figure-2. Complete electrical connections of the spring hand.

ARPN Journal of Engineering and Applied Sciences

EXPERIMENT

Spring hand

Experiments have been conducted to test the performance of the spring hand. The fingers of the hand have been developed using springs to provide the flexibility and adaptability of the hand in grasping various shape objects as human hand. Figure-5 shows the grasping capability of the Spring Hand on embroidery threads and smartphone.

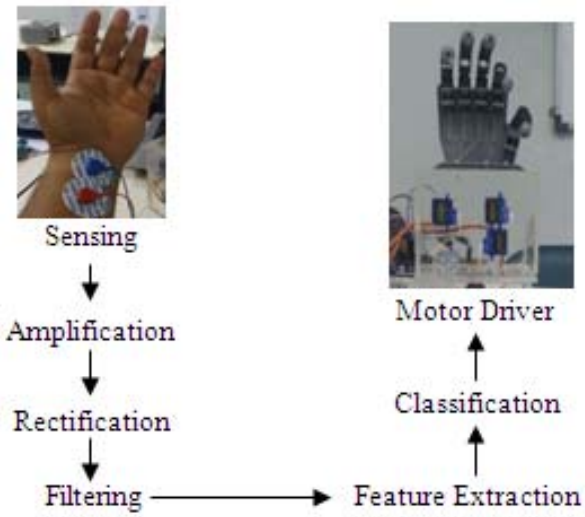

Figure-3. Processes undergone by the EMG signal.

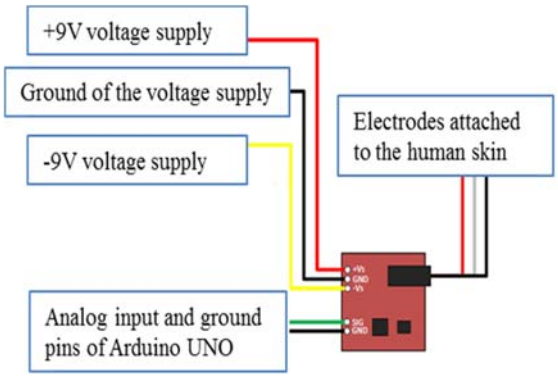

Figure-4. Muscle sensor kit connection.

(a)

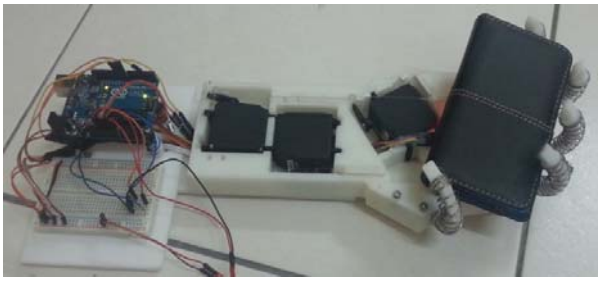

(b)

Figure-5. Spring hand grasping (a) Embroidery threads and (b) Smartphone.

Figure-6 shows the triggered signal of the IR sensor for two cycles. The hand automatically grasps the object beneath the hand as soon as it is detected by the IR sensor. The corresponding motion of the servo motors in realizing grasping motion for two cycles can be observed in Figure-7. Equal input voltage supplies are provided to all motors to pull the strings in bending the fingers. In this figure, T1=2.8s, T2=3.0s and T3=2.8s. From this experiment, the students may learn how does the motors output and motion would be affected by the input from the sensors.

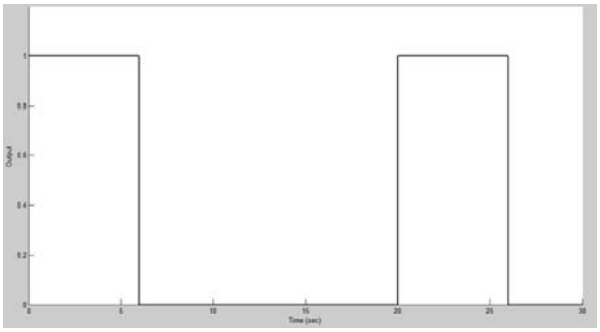

Figure-6. IR sensor triggered signal.

ARPN Journal of Engineering and Applied Sciences

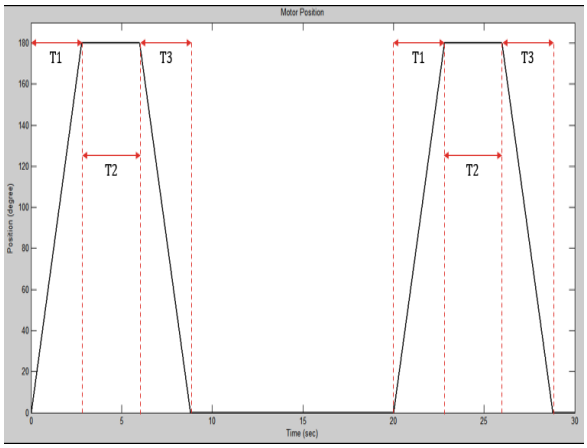

Figure-7. Motor motion with respect to the input from the IR sensor.

The Spring Hand has been tested to press objects with different stiffness. In this test, the computer mouse, keyboard key and neck tie have been chosen shown in Figure-8 and the corresponding force response from the Flexi Force sensor can be observed in Figure-9. The finger bones made of ABS plastic in the Spring Hand allow a more stable pressing on the objects.

(a)

(b)

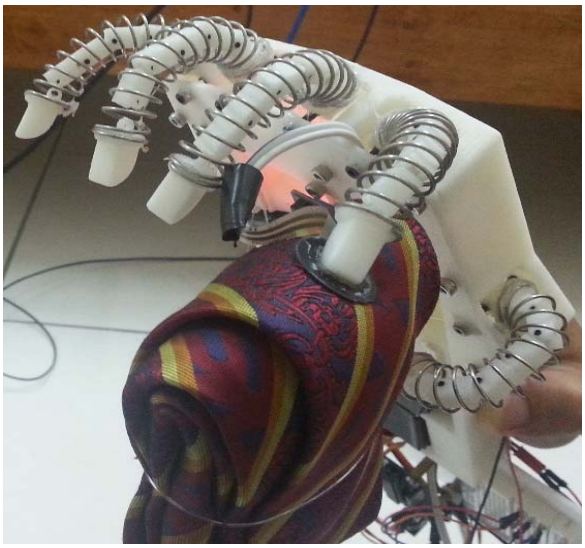

(c)

Figure-8. Fingertip pressing of the spring hand on (a) computer mouse (b) keyboard and (c) neck tie.

From Figure-9, it can be seen that, the highest force measured is the force exerted on the mouse and followed by the keyboard. The lowest maximum force was the force exerted on the neck tie. This result shows the differences in the force exerted by the hand, depending on the stiffness of the object. The students may be able to learn how the input from the sensor may vary with different stimulus from the environment.

EMG hand

Two types of hand movements driven by different EMG signals are considered in this experiment, which are the closing and opening of all fingers and closing and thumb and index finger only

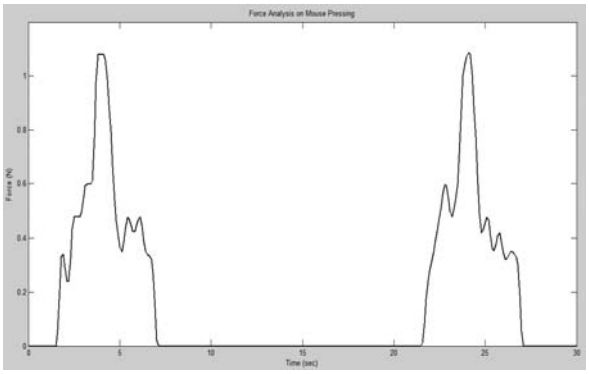

(a)

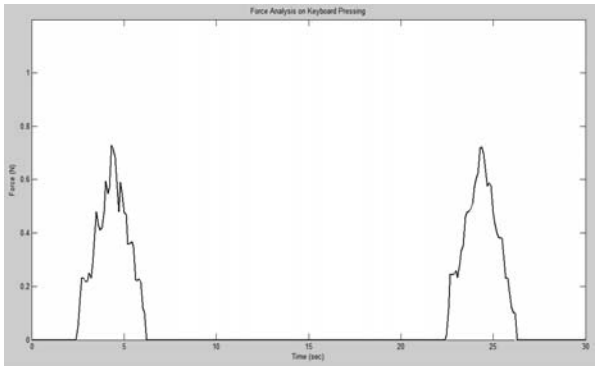

(b)

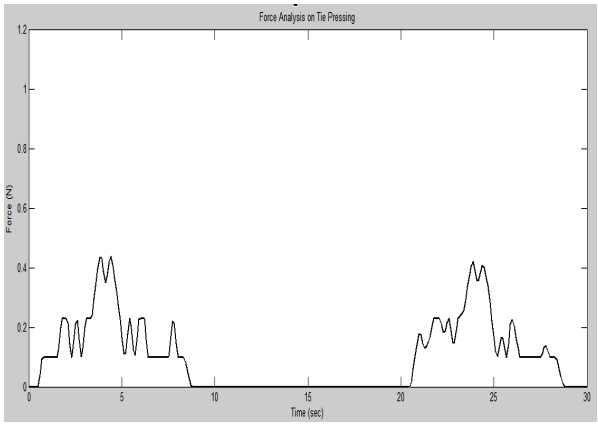

(c)

Figure-9. Force response of the spring hand in pressing (a) Computer mouse (b) Keyboard and (c) Neck tie.

Electrodes are attached on the human skin and the EMG signal that is acquired using the Muscle Sensor kit is transferred to the laptop through Arduino UNO. Figure-10 and Figure-11 shows the EMG signal acquired for opening of all fingers, and closing and thumb and index finger only. In Figure-10, the range of the EMG signal during relaxing state is 246 mV and the signal range for all finger movement is between 245 mV to 254 mV. On the other hand, the range of the EMG signal varies from 263 mV to 268 mV for thumb and index finger movement. The difference in the amplitude of the signal is used in classifying the fingers motion. All the 3 motors rotate when the Arduino detects an EMG signal of amplitude of greater than 6 mV to open all the fingers. If the amplitude of the EMG signal is greater than 9 mV, only Motor 1 and 2 are activated to actuate the thumb and index finger, whereas, all motors are stationary if the finger is at relaxing state. In this experiment, the students will be able to see the motion of the robotic hand in response to their own hand's motion. They will able to learn how the different features in the input signal drive different motors based on the programming code and know how basic classification process can be done.

DISCUSSIONS

The students will be able to learn basic concept in mechatronics engineering using the proposed robotics hand. They will be able to see how the output of a mechatronics system is influenced by the sensor, through the microcontroller. The variation in the sensor readings with respect to different environment stimulus, the effect of the input signal on different motors and basic classification process can also be observed clearly.

The proposed robotics hand imitates the students' hand and therefore will be more interesting and fun to use. The classification method in the EMG hand can be further extended to accommodate higher level courses. The robotics hands were constructed for less than USD200 and this provides an alternative especially for institutions with low financial resources. The next part of the work will involve the actual implementation of the robotic hands in classroom to verify the effectiveness of the learning process using the robot, supported with rubrics of learning measurement.

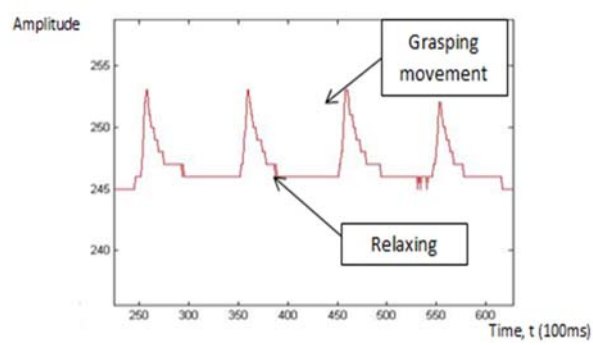

Figure-10. EMG signal for closing and opening all fingers.

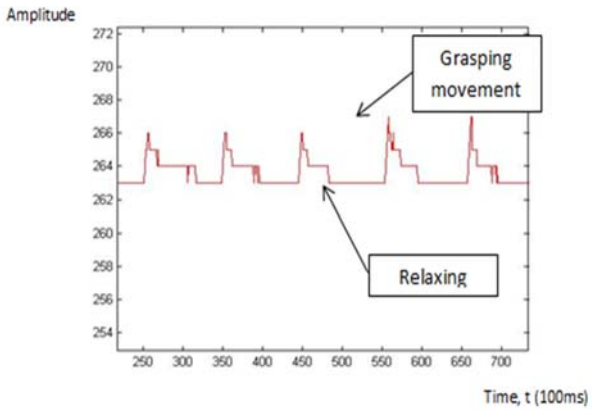

Figure-11. EMG signal for opening and closing thumb and index finger only.

CONCLUSIONS

The development of low-cost Spring Hand and EMG Hand for introduction to mechatronics engineering course has been presented in this paper. The robotics hands demonstrate the variation in the sensor readings with respect to different environment stimulus, effect of the input signal on different motors and basic classification process. Future works involve the upgrading of the hand with more motions and functionality to accommodate higher level courses and syllabus, actual implementation of the system in classes and evaluation of the students' and instructors' feedback for further improvement.

REFERENCES

[1] M. Tomizuka. Mechatronics: From the 20th to 21st century. Control Engineering Practice. 10 (2002): 877-886.

[2] T. A. Tutunji, M. Jumah, Y. Hosamel-deen, S. A. Rabbo. Mechatronics curriculum development at Philadelphia University in Jordan. Mechatronics, 17 (2007): 65-71.

[3] J. Dinsdale, K. Yamazaki. Mechatronics and ASICs. CIRP Annals-Manufacturing Technology 38, (1989) 627-634.

[4] Mechatronics. Retrieved from: https://en.wikipedia.org/wiki/Mechatronics.

[5] Mechatronics Engineering Technology Bachelor of Science Degree Overview. Retrieved from: http://webs.purduecal.edu/et/eng-tech/mtb-degree/.

[6] LEGO Education. Retrieved from: https://shop.education.lego.com/legoed/en-US/search/navSearchResults.jsp?categoryId=EDU_PRD_LINE_107&ProductLine=LEGO-MINDSTORMS-Education-EV3.

[7] Aldebaran. Retrieved from: https://www.aldebaran.com/en/humanoid-robot/nao-robot

[8] KTeam Mobile Robotics. Retrieved from: http://www.k-team.com/.

[9] Robotics. Retrieved from: http://www.robotis.com/xe/bioloid_en.

[10] S. Bhatti. Design of a multiple finger prosthetic hand with a passive adaptive grasp system. Electrical and Biomedical Engineering Design Project, McMaster University, Canada (2010).