VOL. 11, NO. 10, MAY 2016 ISSN 1819-6608
ARPN Journal of Engineering and Applied Sciences

www.arpnjournals.com

SOLITON PULSE GENERATION USING A SWCNTS-POLYVINYL ALCOHOL THIN FILM BASED PASSIVE SATURABLE ABSORBER

Fauzan Ahmad[1, 2], Sulaiman Wadi Harun[3], Roslan Md Nor[4], Harith Ahmad[3] and Mohd Haniff Ibrahim[2]
[1]Department of Electronic Systems Engineering, Malaysia Japan International Institute of Technology, Universiti Teknologi Malaysia, Kuala Lumpur, Malaysia
[2]Lightwave Communication Research Group, Faculty of Electrical Engineering, Universiti Teknologi Malaysia, Johor, Malaysia
[3]Photonic Research Centre, University of Malaya, Kuala Lumpur, Malaysia
[4]Department of Physics, University of Malaya, Kuala Lumpur, Malaysia
E-Mail: fauzan.kl@utm.my

ABSTRACT

Fabrication of single-walled carbon nanotubes (SWCNTs) polymer composite based thin film passive saturable absorber was demonstrated using a simple solution casting approach. The fabricated thin film is integrated in erbium-doped fiber laser (EDFL) in ring cavity and generate soliton pulsed laser. The performance of the generated pulsed laser was recorded with the central wavelength of the self-started stable soliton pulses spectrum at 1556 nm with 4 nm of 3 dB bandwidth and the calculated time-bandwidth product (TBP) is around 0.350. The soliton pulse starts to lase at pump power threshold of 125 mW with a repetition rate, pulse width, average output power, pulse energy, peak power and signal to noise ratio of 15.15 MHz, 710 fs, 0.031 mW, 2.05 pJ, 2.72 W and 50 dB, respectively.

Keywords: single-walled carbon nanotubes polymer composites, passive saturable absorber, soliton pulse.

INTRODUCTION

The operating regimes of the laser can be classified on the basis of temporal characteristics of output emission. The most important regimes are continuous wave (CW), Q-switching, mode-locking, and Q-switched mode-locking [1]. The CW modes are stationary in time while pulsed laser could generate higher peak power with controllable pulse width for specific application.

One of the approaches to obtain ultra-short pulses from a laser is by mode-locking approach with durations typically in the range from picoseconds to femtoseconds from laser cavities. A soliton pulses usually occurs in mode-locking regimes with fixed phase of longitudinal modes, pulse width in femtosecond (fs) range and the frequencies of the repetition rates is in the scale of Megahertz (MHz) [2, 4]. The laser cavity arrangement for mode-locked laser need careful design because the dynamics of ultra-short pulse is usually much more complicated than Q-switched pulse because it involves dispersion, self-phase modulation (SPM), cross phase modulation (XPM) and etc.[3].

Basically, there are two approaches in mode-locked pulse laser generation either by active or passive methods. In active mode locking, some external source is used to drive the mode locking element, while in passive mode locking a saturable absorber is commonly used. Passive mode locking is a method that not requires any external trigger where the nonlinear element is part of the laser cavity. The characteristic of the output pulse is governed by the material used as saturable absorber. They are two types of saturable absorber either artificial effect such as nonlinear polarization rotation (NPR) [5, 6] or a real saturable absorber such as SESAMs [7, 8], SWCNTs [9-11] and graphene [12] based saturable absorber. Recently, Molybdenum Disulfide (MoS_2), Bismuth Selenide (Bi_2Se_3), and Bismuth Telluride (Bi_2Te_3) have been reported and as a good passive saturable absorber with a good characteristic of carrier dynamics, but require complex process for dispersion and exfoliation of the 2D crystals [13].

Host polymers with desirable optical properties are extremely important in the preparation of SWCNTs thin film based saturable absorber (SA). The preparation for carbon nanotubes dispersion requires the target host-polymer matrices to be dissolved and processed. Among reported host polymer that are used for saturable absorber fabrication are polycarbonate (PC), polyvinyl alcohol (PVA), Carboxymethyl cellulose (CMC), Polyimide (PI), Polydimethylsiloxane (PDMS), Polymethyl methacrylate (PMMA) and poly (3-exylthiophene) (P3HT) (Sun *et al*., 14). The simple method to integrate SWCNTs-based saturable absorber into fibre laser is by sandwiching a SWNTs polymer composite between two fibre connectors (14).

In 1.5 micron region, Wang *et al*., [15] employ a SWCNTs-PVA as saturable absorber and reported a time bandwidth product (TBP) of 0.52. Ahmad *et al*. employing SWCNTs- polyethylene oxide (PEO) as host polymer and embed the SWCNTs through solution casting process. They use the SWCNTs-PEO suspension in form of droplet [16] and thin film [17] as passive saturable absorber. The reported TBP is 0.39 for both methods. The optimum TBP value is 0.315 which reflect the transform limited value of secant square pulses.

In this work, a mode locked Erbium fiber laser (EDFL) is demonstrated to generate self-started soliton pulse by using a simple and low cost SWCNTs-based saturable absorber, which is prepared using polyvinyl alcohol (PVA) as a host polymer. PVA has been widely

used for SA [14] because SWCNTs-PVA produces a mechanically stronger thin film with a smooth surface.

MATERIAL AND METHOD

In this work, the key part of mode-locking pulse generation is the fabrication of the saturable absorber incorporating dispersed SWCNTs. Single walled carbon nanotubes acquired from Cheap Tubes Inc., were specified as 99% pure, diameter between 1-2 nm and length between 3-30 µm. The sample was used as received. To aid the dispersion process, sodium dodecyl sulphate (SDS) was used as surfactant to de-bundle the nanotubes.

SDS has the ability of dispersing the SWCNTs with good dispersing stability in the water. Fabricating the saturable absorber comprised three major steps. Firstly, 250 mg of SWCNTs was mixed in 400 ml of 1% of SDS in DI water undergone ultrasonic process using a tip sonicator for about three hours and then through ultrasonic bath for one hour to disperse the SWCNTs. The mixture of disperse and undispersed SWCNTs was then going through centrifuged process at 1000 rpm to remove large particles of undispersed SWCNTs. The PVA host polymer was prepared by dissolving 1 g of PVA in 120 ml of distilled water. To fabricate SWCNTs-PVA polymer composite, the dispersed SWCNTs in DI water was mixed with PVA host polymer in one to one ratio to obtain of mixture SWCNTs-PVA polymer composite suspension. The suspension was then thoroughly mixed by ultrasonic process for one hour. Finally, the suspensions were poured on petri dish and undergo evaporation process in room temperature to develop thin film based saturable absorber.
To investigate the characteristic of the fabricated film, Raman spectroscopy was performed and the result was shown in Figure-1with G peak at 1588 cm^{-1} with a shoulder at 1573 cm^{-1} and Radial Breathing Mode (RBM) at 275 cm^{-1}. The carbon and G' are also observed at 1343 cm^{-1} and a prominent peak at 2645 cm^{-1} due to host polymer, respectively.

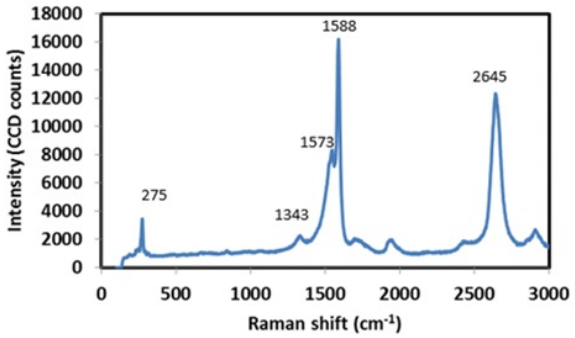

Figure-1. Raman spectrum from the fabricated SWCNTs-PVA film.

EXPERIMENTAL SET-UP

The experimental set-up of the proposed mode-locked EDFL is shown in Figure-2, which consists of a 1 m long EDF with group velocity dispersion (GVD) of -20 fs^2/mm, a 1480/1550 nm wavelength division multiplexing (WDM), polarization controller (PC), a SWCNTs-PVA film based SA, 95/5 output coupler and an isolator, in a ring configuration. An isolator was used to ensure unidirectional of light propagation in laser cavity and on 5% of the propagated light is tap out as output. To integrate the SWCNTs-PVA based SA, the fabricated film was cut in small dimension that enough to cover the end of fibre ferrule and FC/PC fibre connector was used to connect with another end of fibre ferrule. Light source at 1550 nm was used to measure the insertion loss of the inserted thin film with clean fibre ferrule was used as reference fibre. The insertion loss of the fibre ferrule attached with SWCNTs-PVA is around 3 dB at 1550 nm and the insertion loss could be controlled by using different ratio of SWCNTs in host polymer. The output spectral of the laser is observed using an optical spectrum analyser (OSA), and the pulsed was characterized using an oscilloscope via 6 GHz bandwidth photo detector. The estimated length of the laser cavity is around 13.7 meter.

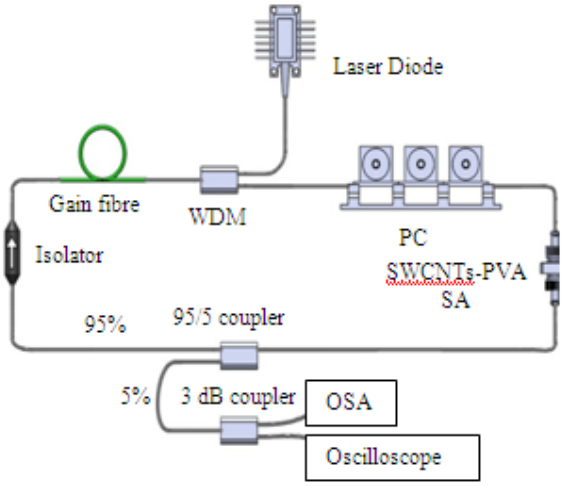

Figure-2. Schematic configuration of the mode-locked EDFL.

EXPERIMENTAL RESULT

By integrating SWCNTs-PVA in EDFL in ring cavity, self-start mode locking occurs at pump power of 125 mW. Figure-3 shows the output spectrum of the proposed EDFL at the threshold pumping power. The generated pulse works at central wavelength 1556 nm with a 3 dB spectral bandwidth of 4 nm. The spectrum is free from continuous wave (CW) parasitic lasing. The presence of Kelly sidebands confirms that this mode-locked fibre laser is operating in the anomalous dispersion regime.

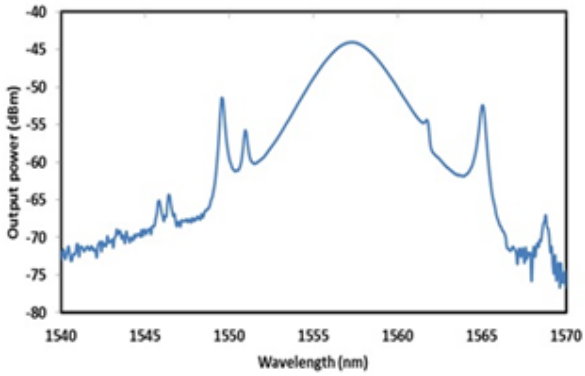

Figure-3. Output spectrum of the mode-locked EDFL with SWCNTs-PVA film SA.

Figure-4 shows the pulse train of the passive mode-locked EDFL obtained at pump power of 125 mW. It has a cavity round trip time of 66 ns, corresponding to a pulse repetition rate 15.15 MHz and a cavity length of 13.7 m. Figure-5 shows the second harmonic generation (SHG) autocorrelation trace, with the estimated pulse duration of 710 fs at its full-width half maximum (FWHM). The autocorrelation trace reveals that the experimental result follows the sech² fitting closely. A time-bandwidth product (TBP) calculated from the 3 dB bandwidth of the optical spectrum and the FWHM of the pulse is around 0.350, which indicates a slightly chirp pulse but better that the works reported by [15, 16, 17]. At pump power of 125 mW, the average output power of this fibre laser is 0.031 mW and thus the resultant pulse energy and peak power are 2.05 pJ and 2.72 W respectively. The RF spectrum is shown in Figure-6. As shown in the figure, the fundamental peak is located at the cavity repetition rate of around 15.15 MHz with an SNR of 50 dB. The frequency of the fibre laser corresponds to the fundamental pulse repetition rate, which matches with 66 ns cavity round-trip time and verifies that the laser is mode-locked. The high SNR indicates low amplitude noise fluctuations and the stability of the mode-locked laser operation. The output stability performance was monitored for over 2 hours within 1% variation.

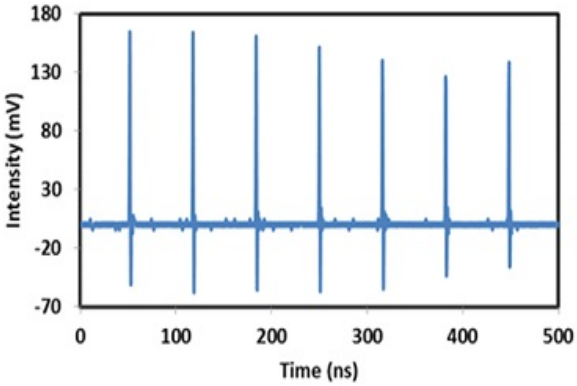

Figure-4. Output pulse train with a repetition rate of 15.15 MHz.

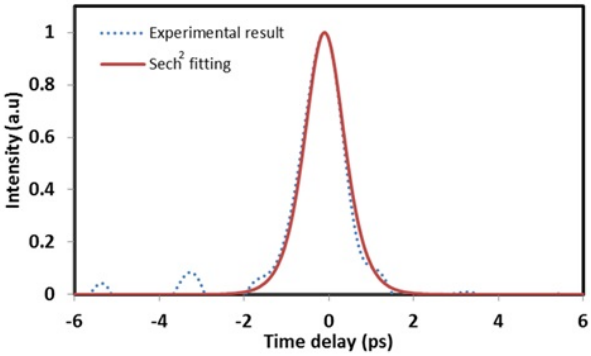

Figure-5. Autocorrelation trace with pulse width of 710 fs.

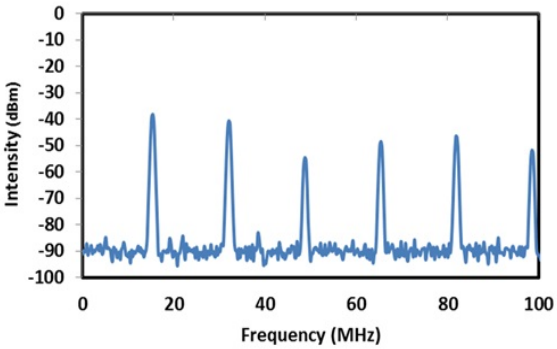

Figure-6. A 100-MHz-span RF spectrum taken at the repetition rate of 15.15 MHz

CONCLUSIONS

We have experimentally demonstrated a passive mode locked EDFL using a SWCNTs-PVA composite thin film-based SA. The thin film was fabricated by solution casting of SWCNTs embedded in PVA which bind the SWCNTS in homogenous solution. By integrating the thin film in EDFL in ring cavity, a stable soliton pulse was observed during experimental works. The fibre laser generate soliton pulses with pump power, 3 dB spectral width, repetition rate, pulse width pulse energy, TBP and SNR of 125 mW, 4 nm, 15.15 Mhz, 710 fs, 2.05 pJ, 0.35 and 50 dB is demonstrated.

REFERENCES

[1] U. Keller, K.J. Weingarten, F.X. Ka¨rtner, D. Kopf, B. Braun, I.D. Jung, R. Fluck, C., Ho¨nninger, N. Matuschek, and J. Aus der Au. 1996. Semiconductor Saturable Absorber Mirrors (SESAM's) for Femtosecond to Nanosecond Pulse Generation in Solid-State Lasers. IEEE Journa of Selected Topics in Quantum Electronics, 2(3): 435-452.

[2] A. E. Siegman.1986. Lasers, University Science Books. Mill Valley, CA, 37.

[3] G. P. Agrawal. 2001. Applications of Nonlinear Fiber Optics, third edition. Academic Press.

[4] T. Hasan, V. Scardaci, P.H. Tan, F. Bonaccorso, A.G Rozhin, Z. Sun, A.C. Ferrari. 2001. Nanotube and Graphene Polymer Composites for Photonics and Optoelectronics, Molecular- and Nano-Tubes. O. Hayden, K. Nielsch (eds.), Springer.

[5] J.C.Dung,S. Chi, C.C Chen. 2003. Characteristics of the erbium doped fiber amplifier with polarization mode dispersion compensation. Opt. Commun. 222, (2003)207-212

[6] J.M. Quintela López-Higuera, C. Jáuregui. 2005. Polarization characteristics of a reflective erbium doped fiber amplifier with temperature changes at the Faraday rotator mirror. Optics Express. 13(5): 1368-1376.

[7] O. Okhotnikov, A. Grudinin, M. Pessa. 2004. Ultra-fast Fiber laser systems based on SESAM technology: new horizons and applications. New J. Phys. 6(177): 1-22.

[8] L. Orsila, L.A. Gomes, N. Xiang, T. Jouhti, O.G. Okhotnikov. 2004. Mode-locked ytterbium fiber lasers. Appl. Opt. 43(9):1902

[9] S. Y. Set, H. Yaguchi, Y. Tanaka, M. Jablonski. 2004. Laser Mode Locking Using a Saturable Absorber incorporating Carbon Nanotubes. IEEE J. Lightwave Technol. 22: 51.

[10] K. Kieu and F.W. Wise. 2009. Soliton Thulium-Doped Fiber Laser with Carbon Nanotube Saturable Absorber, IEEE Photon. Technol. Lett. 21: 128-130.

[11] Y.W. Song, S. Yamashita, C.S. Goh, S.Y. Set. 2007. Carbon nanotube mode lockers with enhanced nonlinearity via evanescent field interaction in D-shaped fibers, Opt. Lett. 32: 148-150.

[12] H. Zhang, D. Y. Tang, L. M Zhao, Q. L. Bao, K. P. Loh. 2009. Large energy mode locking of an erbium-doped fiber laser with atomic layer graphene, Optics Express, 17(20): 17630-17635.

[13] F. Bonaccorso and Z. Sun. 2014. Solution processing of graphene, topological insulators and other 2d crystals for ultrafast photonics. Optical Material Express. Vol. 4(1): 63-78.

[14] Z. Sun, T. Hasan, A.C. Ferrari, A.C. 2012. Ultrafast lasers mode-locked by nanotubes and graphene, Physica E. 44:1082.

[15] F. Wang , A. G. Rozhin, Z. Sun, V. Scardaci, R. V. Penty, I. H. White and A. C. Ferrari. 2008. Fabrication, characterization and mode locking application of single-walled carbon nanotube / polymer composite saturable absorbers. Int. J. Mater. Form. 1: 107-112.

[16] F. Ahmad, F., S.W. Harun,R.M. Nor, N.R. Zulkepely, and H. Ahmad. 2013. A Passively Mode-Locked Erbium-Doped Fiber Laser Based on a Single-Wall Carbon Nanotube Polymer. Chinese Physics Letters, 30(5): 054210.

[17] F. Ahmad, S.W. Harun, R.M. Nor, N.R. Zulkepely, F.D. Muhammad, H. Arof, and H. Ahmad. 2014. Mode-locked soliton erbium-doped fiber laser using a single-walled carbon nanotube embedded in polyethylene oxide thin film saturable absorber. Journal of Modern Optics. 61(6): 541-545.