VOL. 11, NO. 13, JULY 2016 ISSN 1819-6608
ARPN Journal of Engineering and Applied Sciences

www.arpnjournals.com

DESIGNED A NEW COMPENSATION CURRENT CONTROL METHOD FOR THREE-PHASE GRID-CONNECTED PHOTOVOLTAIC INVERTER

A. A. MohdZin[1], A. Naderipour[1], M. H. Habibuddin[1], A. Khajehzadeh[2] and M. Moradi[1]
[1]Faculty of Electrical Engineering, Universiti Teknologi Malaysia, Johor, Malaysia
[2]Department of Electrical Engineering, Kerman Branch, Islamic Azad University, Kerman, Iran
E-Mail: asuhaimi@utm.my

ABSTRACT

This article proposes a New Compensation Current Control Method for Three-Phase Grid-Connected Photovoltaic Inverter. Our proposed grid-connected power converter consists of a switch mode DC-DC boost converter and an H-bridge inverter. The control method designed to eliminate main harmonics and also is responsible for the injection power to the grid. The proposed control method is comprised of the advance synchronous reference frame method (ASRF). The simulations for three-phase Bridge type inverter have been done in MATLAB/Simulink. To validate the simulation results, a scaled prototype model of the proposed inverter has been built and tested.

Keywords: Power quality, microgrid, harmonic, dispersed generation, active filter, passive filter.

1. INTRODUCTION

Renewable energy (RE), specifically from all renewable sources the wind energy is one of the most encouraging renewable energy sources free from release of greenhouse gases (GHG), and it has prospective in regard with demand of energy because of its obtainability which increases interest worldwide [1]. DG systems comprised of photovoltaic (PV) is mostly based on grid-connected Inverters as an interface between the source and the grid [2]. Grid-connected photovoltaic inverter is one the most demanding power electronic inverters nowadays. It is due to the fact that solar energy is considered as an alternate for the fossil fuels like coal and oil. Photovoltaic grid-connected inverters are divided into three main categories depending on the maximum injected power to the grid. They are micro, string and central inverters [3]. In the area of the string inverters, the power electronic inverter system consists of two circuits. A boost DC-DC converter that increases the DC voltage of the PV panels and three phase inverter that injects sinusoidal current to the grid [4]. Due to the grid inverter influenced by various nonlinear factors, its output grid current waveform distortion is more serious. Therefore, master photovoltaic grid-connected inverter technology is crucial. There are many kinds of grid inverter control strategy [5]. Between DC-DC converter and DC-AC converter usually set up with a sufficient dc filter capacitor, at the same time, the dc filter capacitor energy level changes before and after in the buffer, and it also played a decoupling role on the front and rear level control. As illustrated above, Grid-connected inverter is actually active inverter, and the grid-connected inverter generally adopts full control switch device, therefore, grid-connected inverter can also be called PWM grid-connected inverter [6]. The Two switches of the same bridge arm tube complementary switched on and off, to complete the inverter. A Photovoltaic power generation system generally uses pulse width modulation PWM inverter to achieve, convert the rectangular wave AC to AC sine wave [7]. For three-phase grid-connected inverter control, the control design based on synchronous rotating coordinate system is very convenient, the ABC three-phase static coordinate system is converted into synchronous rotating coordinate system by the coordinate transformation, after coordinate transformation, converted the fundamental sine variables in the three phase stationary coordinate system into synchronous rotating coordinate system DC variable[8]. Xuan Zhang in [9] a state space model of three phase paralleled inverters in grid-connected microgrid based on droop control to facilitate the control design and stability analysis [10]. This model is established in rotation framework based on modern control theory and can be very easily used in microgrid. In traditional control methods, the control of three phase grid-connected inverter are designed in either synchronous reference domain [11], [12] or stationary domain [13], [14]. The stationary frame based control can avoid the coupling terms and also the possibility of harmonic by controlling, but suffers from the complicated design, sensitivity to the grid frequency [15], and resonant controllers that causes difficult for digital implementation [16]. Therefore, PI controller is used to decouple the real and reactive power by eliminating the coupling terms between *d-q* axes [17]. The control of reactive power has been widely understood and applied in rectifier, grid-connected inverters of PV and distributed power generation systems [18]–[20].

This paper proposes a control strategy of three-phase Grid-connected inverter. This control method responsible injection power to grid and compensation main harmonic in microgrid bus and power common coupling (PCC). To use this control method can remove dedicated compensation devices such as active power filter in PCC.

2. STRUCTURE OF THE SYSTEM

Figure-1 displays the configuration of the studied system.

VOL. 11, NO. 13, JULY 2016 ISSN 1819-6608
ARPN Journal of Engineering and Applied Sciences

www.arpnjournals.com

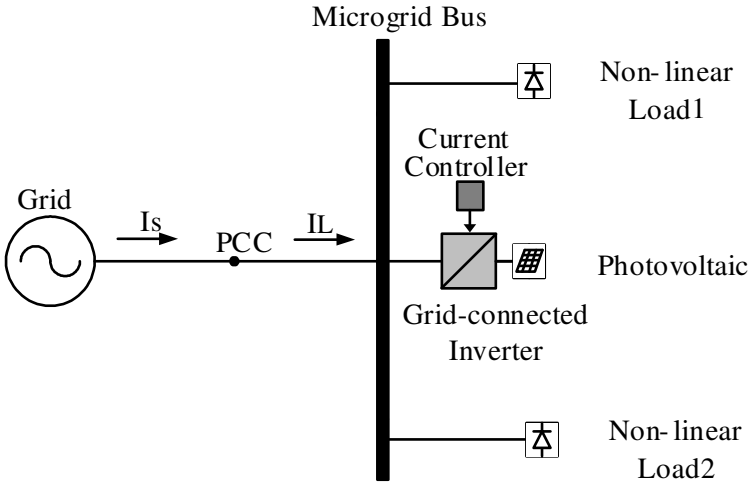

Figure-1. Studied system configuration with nonlinear loads and distributed generations.

This system contains a sine voltage source along with one DG sources, PV and as well as two non-linear loads, the first of which is formed by three unbalanced single-phase diode rectifiers and the second of which is formed by one three-phase diode rectifier and acts as a source of harmonic current. Further details about the system can be found in Table-1.

Table-1. N-Load/DG parameters and conditions for the system.

Identifier	Components of load/DGs	Current THD %	N-Load current
Photovoltaic	PV Array	9.89	Balanced
N-Load 1	Three-phase diode rectifier	6.31	Balanced
N-Load 2	Three-phase diode rectifier	18.23	Unbalanced
System	Three-phase	7.93	Unbalanced

Figure-2 shows a PV that has a frequency of 50 Hz. To obtain power, many PV cells are connected in different parallel and series circuits on a panel (module), The PV array is a group of a PV modules electrically connected in a parallel series to generate current and voltage [21]. The detail model about this DG is 100-kW PV Array Maximum Power 330 Sun-Power SPR-305.

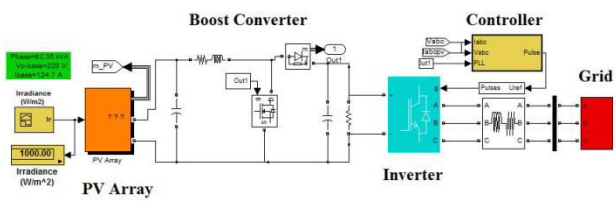

Figure-2. Schematic diagram of the photovoltaic.

3. PROPOSE CONTROL METHOD

To enhance grid and microgrid current quality, an advanced current control method for the interface converter, as shown in Figure-3, is introduced.

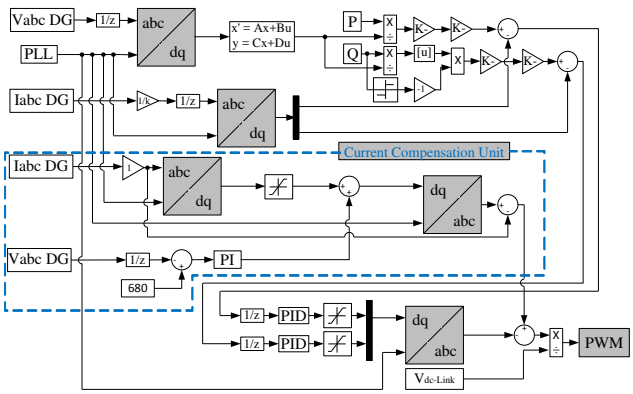

Figure-3. Block diagram of the proposed control method.

4. SYNCHRONOUS REFERENCE FRAME CONTROL

The Park transformation for electrical power system analysis was extended. The application of the Park transformation to three generic three-phase quantities supplies their components in $dq0$ coordinates [22]. In general, three-phase voltages and currents are transformed into $dq0$ co-ordinates by matrix $[L]$ as follows:

$$\begin{bmatrix} u_d \\ u_q \\ u_0 \end{bmatrix} = [L]\begin{bmatrix} u_A \\ u_B \\ u_C \end{bmatrix} \; and \; \begin{bmatrix} i_d \\ i_q \\ i_0 \end{bmatrix} = [L]\begin{bmatrix} i_A \\ i_B \\ i_C \end{bmatrix} \tag{1}$$

$$[L] = \sqrt{\frac{2}{3}}\begin{bmatrix} \sin\alpha & \sin\left(\alpha - \frac{2\pi}{3}\right) & \sin\left(\alpha + \frac{2\pi}{3}\right) \\ \cos\alpha & \cos\left(\alpha - \frac{2\pi}{3}\right) & \cos\left(\alpha + \frac{2\pi}{3}\right) \\ \frac{1}{\sqrt{2}} & \frac{1}{\sqrt{2}} & \frac{1}{\sqrt{2}} \end{bmatrix} \tag{2}$$

$\alpha = \omega t$

and the three-phase load currents are transformed in $dq0$ co-ordinates by $[L]$

$$\begin{bmatrix} i_{Ld} \\ i_{Lq} \\ i_{L0} \end{bmatrix} = [L]\begin{bmatrix} i_{LA} \\ i_{LB} \\ i_{LC} \end{bmatrix} \tag{3}$$

Therefore, by averaging i_{Ld} and i_{Lq} in domain $[0 - 2\pi]$ results in components i_{Ld} and i_{Lq}, that is

$$\bar{i}_{Ld} = \frac{1}{2\pi}\int_0^{2\pi} i_{Ld} d\,\omega t$$
$$\bar{i}_{Lq} = \frac{1}{2\pi}\int_0^{2\pi} i_{Lq} d\,\omega t \tag{4}$$

Where

$$i_{Ld} = \sqrt{\frac{2}{3}}\begin{bmatrix} i_{LA} sin\ \omega t + i_{LB}\sin\left(\omega t - \frac{2\pi}{3}\right) + \\ i_{LC}\sin\left(\omega t + \frac{2\pi}{3}\right) \end{bmatrix} \tag{5}$$

$$i_{Lq} = \sqrt{\frac{2}{3}}\begin{bmatrix} i_{LA}\cos\omega t + i_{LB}\cos\left(\omega t - \frac{2\pi}{3}\right) + \\ i_{LC}\cos\left(\omega t + \frac{2\pi}{3}\right) \end{bmatrix} \tag{6}$$

$$a_{A1}^{(i)} = \sqrt{\frac{2}{3}}\,\bar{i}_d(t) \; and \; b_{A1}^{(i)} = \sqrt{\frac{2}{3}}\,\bar{i}_q(t) \tag{7}$$

Equation (7) gives the relationship between the dc component of i_{Ld} and i_{Lq} and the coefficients of i_{LS}, the compensating objective of the APF.

The three-phase load currents are transformed in *dq0* co-ordinates as follows:

$$\begin{bmatrix} u_d \\ u_q \\ u_0 \end{bmatrix} = [L]\begin{bmatrix} u_A \\ u_B \\ u_C \end{bmatrix} \tag{8}$$

Similarly, the averages of u_d and u_q are calculated, and the coefficients of u_A are

$$a_{A1}^{(u)} = \sqrt{\frac{2}{3}}\,\bar{u}_d(t) \; and \; b_{A1}^{(u)} = \sqrt{\frac{2}{3}}\,\bar{u}_q(t) \tag{9}$$

Hence, the following equations can be obtained

$$v_d = \frac{2}{3}\begin{pmatrix} u_A \sin\omega t + u_B \sin(\omega t - \frac{2\pi}{3}) + \\ u_C \sin(\omega t + \frac{2\pi}{3}) \end{pmatrix} \tag{10}$$

$$v_d = \frac{2}{3}\begin{pmatrix} u_A \cos\omega t + u_B \cos(\omega t - \frac{2\pi}{3}) + \\ u_C \cos(\omega t + \frac{2\pi}{3}) \end{pmatrix} \tag{11}$$

$$v_0 = \frac{1}{3}(v_A + v_B + v_C) \tag{12}$$

The control variables then become dc values; consequently, filtering and controlling can be easily achieved.

The dc-link voltage in this structure is controlled by the essential output power, which is the reference for the active current controller. Usually, the *dq* control methods are associated with proportional–integral (PI) controllers because they have a satisfactory behavior when regulating dc variables. Equation (13) gives the matrix transfer function in *dq* coordinates

$$G_{PI}^{(dq)}(s) = \begin{bmatrix} K_p + \frac{K_i}{s} & 0 \\ 0 & K_p + \frac{K_i}{s} \end{bmatrix} \tag{13}$$

Where K_p and K_i are the proportional and integral gain of the controller, respectively.

5. SIMULATION RESULTS

To demonstrate the effectiveness of the proposed control strategy on grid-connected PV inverter, the system in Figure-1 was simulated in MATLAB/Simulink and a sinusoidal grid voltage is assumed. In the simulation, two case studies are taken into account. Case I: Without any compensation and case II: Without compensation devices and using propose control method.

VOL. 11, NO. 13, JULY 2016 ISSN 1819-6608
ARPN Journal of Engineering and Applied Sciences

A. Case I: Unbalanced and Distorted System Currents without any Compensation

In case 1, the resulting system waveforms are shown in Figure-4 without any compensation. The dispersed generation unit (i.e., a PV) is connected to the system through a power electronic inverter and nonlinear loads (three-phase and three single-phase diode rectifiers), which produce the distorted waveforms. The DG sources and nonlinear loads make the system current nonlinear and unbalanced.

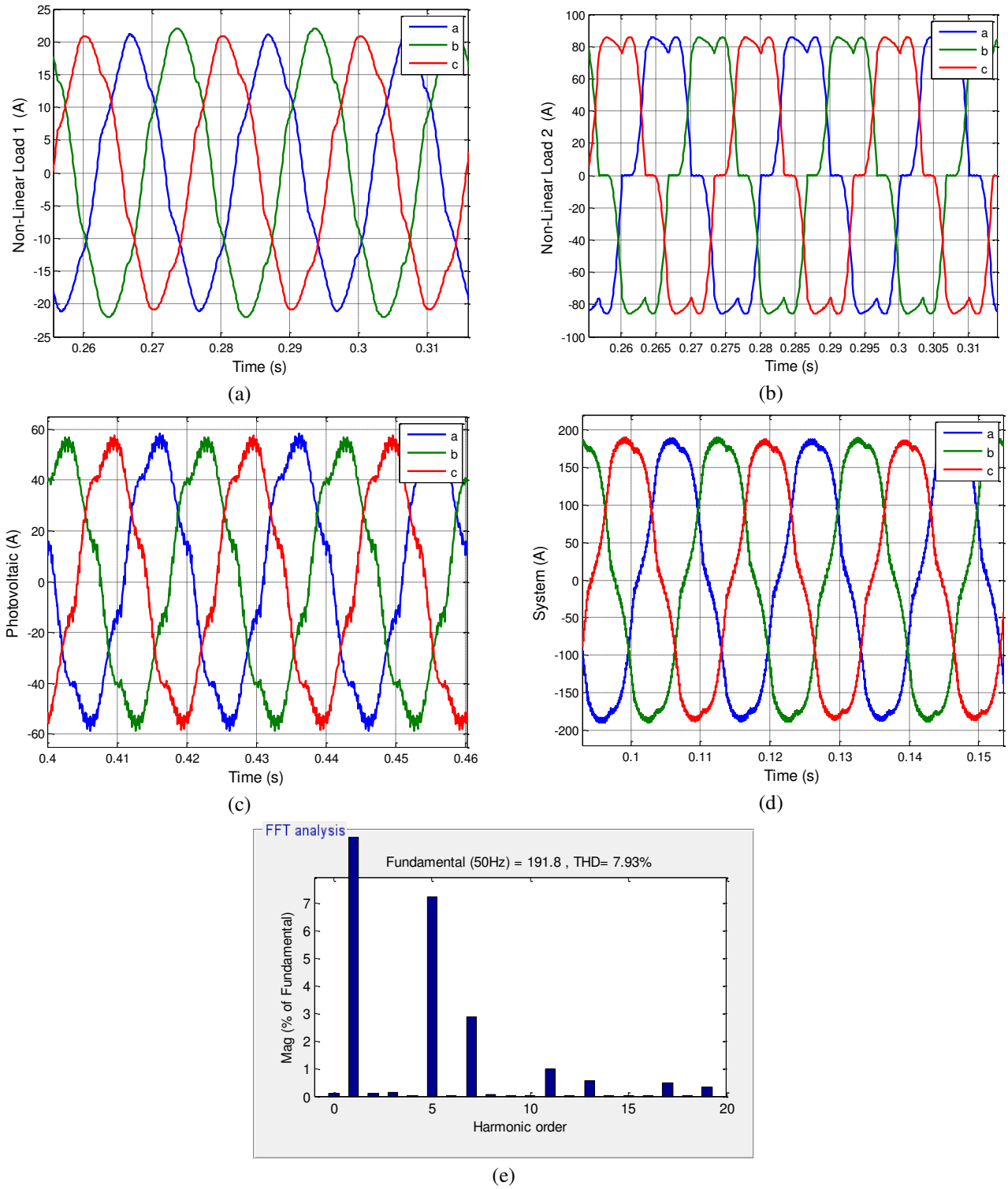

Figure-4. System, DG units and nonlinear loads current waveforms without compensation: (a) nonlinear load 1 currents; (b) nonlinear load 2 currents; (c) PV currents; (d) system currents; (e) frequency spectrum of the system currents.

B. Case II: With using propose control method

Case II, an improved power quality with the propose control method of grid connected PV inverter. The main contribution of this study is the PCC current compensation and microgrid bus. The compensated system currents are explained in this subsection. The resulting system waveforms are shown in Figure-5. After connecting proposes control method the THD has been reduced to below 2%.

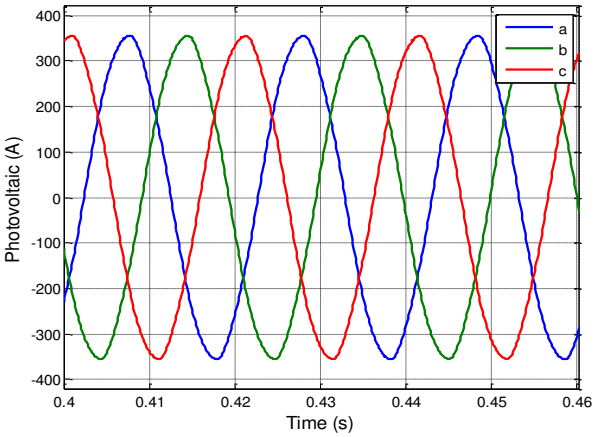

(a)

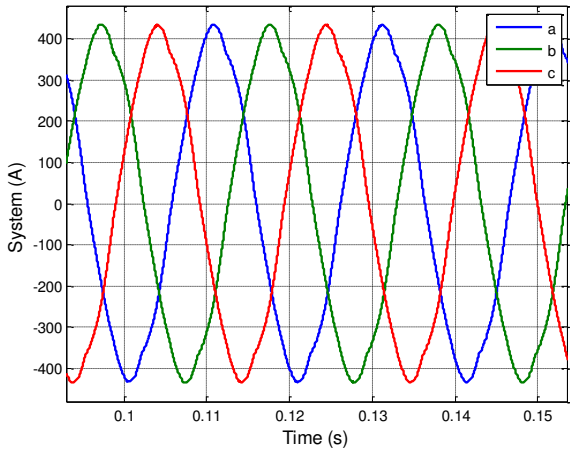

(b)

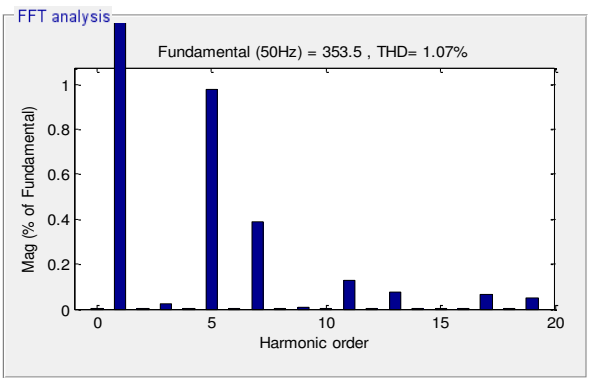

(c)

Figure-5. System and DG unit current waveforms in the absence of compensation; (a) Photovoltaic currents; (b) system currents; and (c) frequency spectrum of system currents.

6. CONCLUSIONS

This paper has proposed a new approach is proposed to control the interface inverter of photovoltaic in a microgrid bus under nonlinear and unbalanced load conditions. The PV is connected to the grid by inverter, and a harmonic current is injected into the grid. The propose control method is responsible for controlling the power injection to the grid and also is responsible for compensating for the main harmonic current in microgrid bus and PCC. The simulation results demonstrated that the system current THD was reduced below 2% by proposing method, which meets the IEEE-519 and CEI 61000 standard limits.

ACKNOWLEDGMENTS

The authors would like to thank Universiti Teknologi Malaysia for the support and management under vote 10H58. Moreover, we would also like to thank the Malaysian Ministry of Education (MOE) for the cooperation and financial support for doing this work.

REFERENCES

[1] S. H. Qazi and M. W. Bin Mustafa, "Technical issues on integration of wind farms with power grid-A review."

[2] S. Patra, Ankur, M. Narayana, S. R. Mohanty, and N. Kishor. 2015. "Power Quality Improvement in Grid-connected Photovoltaic–Fuel Cell Based Hybrid System Using Robust Maximum Power Point Tracking Controller," Electr. Power Components Syst., vol. 43, no. 20, pp. 2235–2250.

[3] S. B. Kjaer, J. K. Pedersen, and F. Blaabjerg. 2005. "A review of single-phase grid-connected inverters for photovoltaic modules," Ind. Appl. IEEE Trans., vol. 41, no. 5, pp. 1292–1306.

[4] N. Golbon, G. Moschopoulos, and S. A. Khajehoddin. 2013. "A control strategy for a solar grid-connected inverter," in Electrical and Computer Engineering (CCECE), 2013 26th Annual IEEE Canadian Conference on, 2013, pp. 1–4.

[5] Z. Xi, M. Deng, and K. Li, "Research on Control Strategy of Photovoltaic Grid-Connected Inverter," in Intelligent Human-Machine Systems and Cybernetics (IHMSC), 2013 5th International Conference on, 2013, vol. 2, pp. 467–469.

[6] N. Mohan and T. M. 2007. Undeland, Power electronics: converters, applications, and design. John Wiley & Sons.

[7] A. Naderipoura, A. A. M. Zinb, M. H. Habibuddinc, S. Khokhard, and A. Kazemi, "Improved Control of Shunt Active Power Filter Using Harmony Search Algorithm."

[8] H. MAO, X. MAO, and C. PEI. 2011. "Simulation and Research of Single-phase Grid-connected Photovoltaic Inverter Based on Simulink [J]," Low Volt. Appar., vol. 10, no. 06, pp. 50–52.

[9] X. Zhang, J. Liu, and Z. You, "A state space model of paralleled inverters based on droop control in grid-connected microgrid," in Applied Power Electronics Conference and Exposition (APEC), 2014 Twenty-Ninth Annual IEEE, 2014, pp. 1815–1820.

[10] S. Khokhar, A. A. M. Zin, A. S. Mokhtar, M. A. Bhayo, and A. Naderipour, "Automatic Classification of Single and Hybrid Power Quality Disturbances Using Wavelet Transform and Modular Probabilistic Neural Network."

[11] M. Liserre, R. Teodorescu, and F. Blaabjerg. 2006. "Multiple harmonics control for three-phase grid converter systems with the use of PI-RES current controller in a rotating frame," IEEE Trans. Power Electron., vol. 21, no. 3, pp. 836–841.

[12] F. Blaabjerg, R. Teodorescu, M. Liserre, and A. V Timbus. 2006. "Overview of control and grid synchronization for distributed power generation systems," Ind. Electron. IEEE Trans., vol. 53, no. 5, pp. 1398–1409.

[13] P. C. Loh and D. G. Holmes. 2005. "Analysis of multiloop control strategies for LC/CL/LCL-filtered voltage-source and current-source inverters," Ind. Appl. IEEE Trans., vol. 41, no. 2, pp. 644–654.

[14] I. J. Gabe, V. F. Montagner, and H. Pinheiro. 2009. "Design and implementation of a robust current controller for VSI connected to the grid through an LCL filter," Power Electron. IEEE Trans., vol. 24, no. 6, pp. 1444–1452.

[15] A. V Timbus, M. Ciobotaru, R. Teodorescu, and F. Blaabjerg. 2006. "Adaptive resonant controller for grid-connected converters in distributed power generation systems," in Applied Power Electronics Conference and Exposition, 2006. APEC'06. Twenty-First Annual IEEE, 2006, p. 6.

[16] R. Teodorescu, F. Blaabjerg, M. Liserre, and P. C. Loh, "Proportional-resonant controllers and filters for grid-connected voltage-source converters," in Electric Power Applications, IEE Proceedings, 2006, vol. 153, no. 5, pp. 750–762.

[17] A. Naderipour, A. A. M. Zin, M. H. Habibuddin, and J. M. Guerrero. 2015. "A control scheme to improve the power quality with the absence of dedicated compensation devices in microgrid," in 2015 IEEE Student Conference on Research and Development (SCOReD), pp. 239–244.

[18] R. Majumder. 2013. "Reactive power compensation in single-phase operation of microgrid," Ind. Electron. IEEE Trans., vol. 60, no. 4, pp. 1403–1416.

[19] B. Yang, W. Li, Y. Zhao, and X. He. 2010. "Design and analysis of a grid-connected photovoltaic power system," Power Electron. IEEE Trans., vol. 25, no. 4, pp. 992–1000.

[20] S. A. Azmi, G. P. Adam, K. H. Ahmed, S. J. Finney, and B. W. Williams. 2013. "Grid interfacing of multimegawatt photovoltaic inverters," Power Electron. IEEE Trans., vol. 28, no. 6, pp. 2770–2784.

[21] R. Kumar, A. Mohanty, S. R. Mohanty, and N. Kishor. 2012. "Power quality improvement in 3-Φ grid connected photovoltaic system with battery storage," in Power Electronics, Drives and Energy Systems (PEDES), 2012 IEEE International Conference on, pp. 1–6.

[22] R. S. Herrera, P. Salmerón, and H. Kim. 2008. "Instantaneous reactive power theory applied to active power filter compensation: Different approaches, assessment, and experimental results," Ind. Electron. IEEE Trans., vol. 55, no. 1, pp. 184–196.