VOL. 11, NO. 16, AUGUST 2016 ISSN 1819-6608
ARPN Journal of Engineering and Applied Sciences

www.arpnjournals.com

APPLICATION OF INDISTINCT NEURAL NETWORKS FOR SOLVING FORECASTING PROBLEMS IN THE ROAD COMPLEX

D. A. Skorobogatchenko[1],V. A. Kamaev[1], A. G. Finogeev[2] and Dang Thanh Trung[3]
[1]Volgograd State Technical University Russia
[2]Penza State University Russia, Penza, Russia
[3]Institute of Information Technologies and Communications of the Vietnam Academy of Science, Russia

Abstract

In article is considered questions of application of indistinct neural networks for the solution of a wide class of the tasks connected with forecasting in difficult systems of a road complex. The offered concept considers nonlinearity of change of the majority of the processes proceeding in a road complex and influence of conditions of uncertainty. As examples of use of indistinct neural networks in a road complex results of forecasting of quantity of road accidents, managements of a transport and operational condition of highways and optimization of placement of asphalt concrete factories are presented.

Keywords: indistinct neural networks, forecasting of quantity of road accidents, management of a transport and operational condition of highways, optimization of placement of asphalt concrete factories.

INTRODUCTION

Today in a road complex there is a number of the actual problems connected with management of difficult objects (processes) depending on the current own parameters, level of external influences and purposes. So, management of safety on highways against growth of the cities and level of an automobilization, the maintenance of a paving in a standard state at the reduced amounts of financing or optimization of placement of the enterprises of road infrastructure represent an example of the key administrative problems in a road complex having the extreme social and economic importance.

Key element of a control system is the mechanism of forecasting of change of a condition of object, depending on its current parameters, level of external indignations and the operating influences. The purpose of further researches – to develop system of forecasting of the changing condition of difficult object in a road complex (Figure-1).

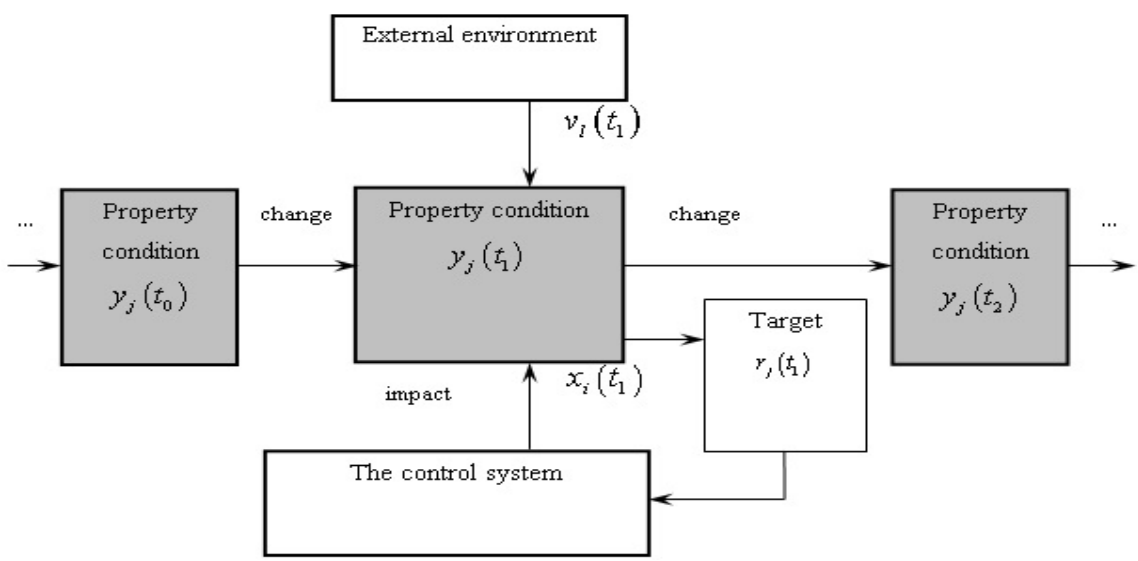

Figure-1. Model of change of a condition of difficult object in a road complex.

The special features of the functioning of the vast majority of complex objects (processes) in the road complex should include the incompleteness of the initial data, the need to consider a number of factors of the environment, and the availability of multi-criteria of targets. Also it should be noted that the considerable part of entrance information is presented in the form of linguistic estimates of experts that significantly limits applicability of traditional quantitative models [5].Therefore, the perspective device of the solution of problems of forecasting of change of a condition of difficult objects in a road complex is the device of

indistinct sets and in, particulars, a logical conclusion [1]. As the instrument of increase of adaptability of an indistinct conclusion and elimination of shortcomings of subjectivity of a grid of rules and a form of functions of accessory of the classical theory of indistinct sets the device of the indistinct neural networks allowing to solve numerous problems of a road complex was chosen [2].

METHODOLOGY AND RESULTS

The forecast of a qualitative condition of difficult object in organizational systems of a road complex through a certain time interval is result of realization of systems of a logical conclusion [4].

We will consider system of forecasting of a condition of difficult object (process) of a road complex on the basis of indistinct implication. In case of N-variables, rules of a conclusion have generally the following appearance:

If x_1 is A_1 and x_2 is A_2 and …. andx_N is A_N, then y is B.

where A and B are the linguistic values identified in the indistinct way through the corresponding functions of accessory. The x_1, x_2,…x_N variables form a N-dimensional entrance vector x, the making argument of a condition in which A_1, A_2,…, A_N and B designate sizes of the corresponding function of accessory μ_A (x_i) (i=1 … N) and μ_B (y), the function of Gauss defined in this case:

$$\mu_A(x) = \frac{1}{1 + \left(\frac{x - c}{\sigma}\right)^{2b}}$$

where *c, σ, b* the parameters of function of Gauss defining its center, width and a form, respectively.

If to consider that is available M-rules (and M-functions of accessory), the matrix of values of functions of accessory of the N×M size is formed:

Rule 1: If $x_1^{(1)}$ it is $A_1^{(1)}$ and $x_2^{(1)}$ it is $A_2^{(1)}$ and …. and $x_N^{(1)}$ it is $A_N^{(1)}$,then $y^{(1)}$ it is $B^{(1)}$,

Rule 2: If $x_1^{(2)}$ it is $A_1^{(2)}$ and $x_2^{(2)}$ it is $A_2^{(2)}$ and …. and $x_N^{(2)}$ it is $A_N^{(2)}$, then $y^{(2)}$ it is $B^{(2)}$,……..

Rule M:If $x_1^{(M)}$ it's $A_1^{(M)}$ and $x_2^{(M)}$ it's $A_2^{(M)}$ and … and $x_N^{(M)}$ it's $A_N^{(M)}$,then $y^{(M)}$ it's $B^{(M)}$

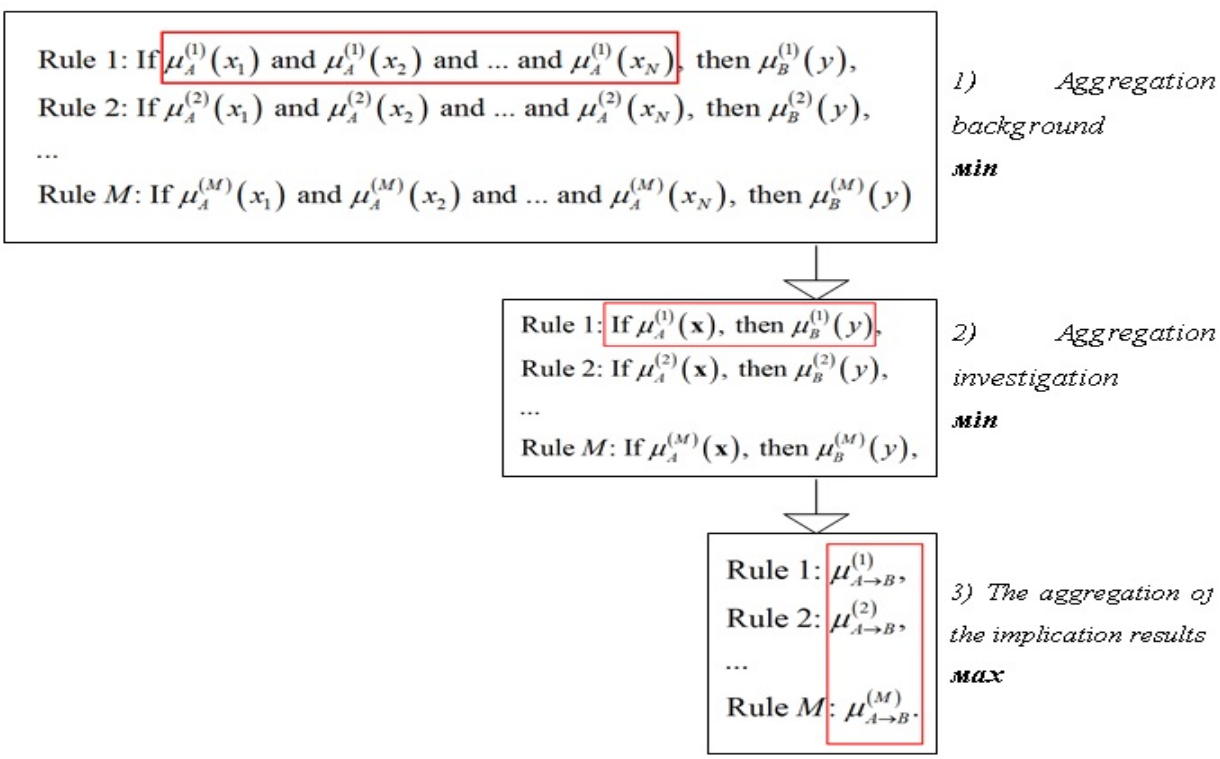

Figure-2. The scheme of a logical conclusion of Mamdani-Zade used for forecasting of change of a condition of difficult object in a road complex.

We will present further sequence of functioning of indistinct system in a road complex with a conclusion of Mamdani-Zade in the form of the following stages (see Figure-2):

1 stage: aggregation of the prerequisite. The arriving value of function of accessory $\mu_A(x)$ where x – a N-dimensional vector, are aggregated in the form of algebraic work:

$$\mu_A(\mathbf{x}) = \prod_{i=1}^{N} \mu_A(x_i)$$

2 stage: aggregation of a consequence. Each implication the unique value of function of accessory $\mu_{A\to B}$ is attributed (x, y). This operation is also carried out with use of operation of algebraic work:

$$\mu_{A\to B} = \mu_A(x) \times \mu_B(y)$$

3 stage: aggregation of results. At this stage the operator of the sum is applied to aggregation of results of implication of many rules.

In final part of a conclusion of Mamdani-Zade the procedure of a defuzzificationallowing to receive accurate value of an output variable – the predicted condition of difficult object of road branch is carried out (see Figure-3).

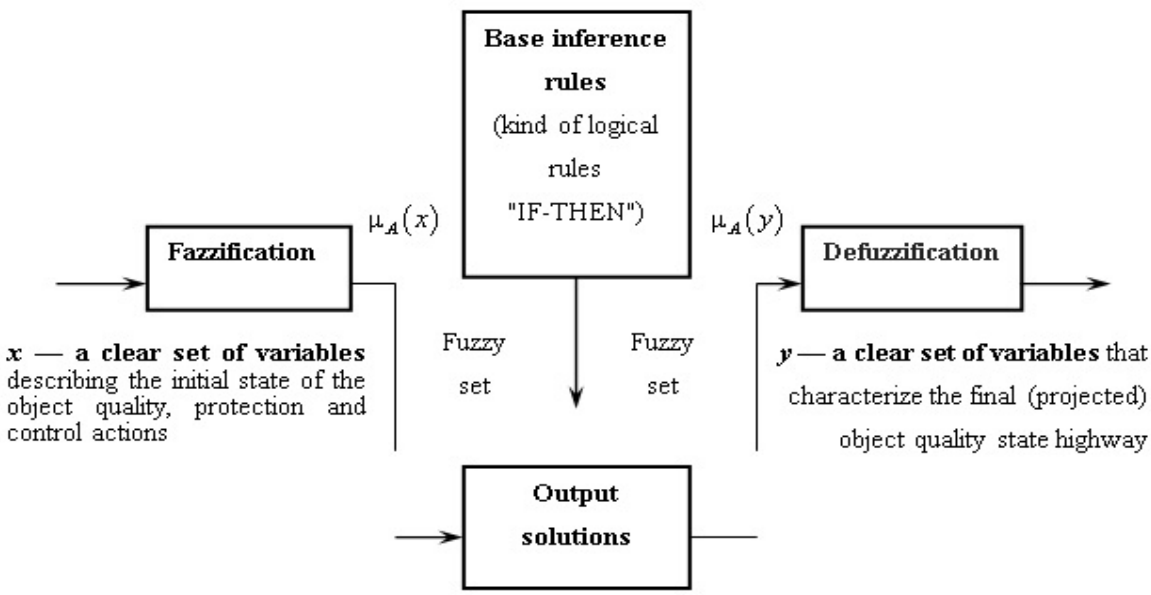

Figure-3. Defuzzifikator transforms an indistinct set to completely determined exact decision y, representing the final (predicted) condition of difficult object of a road complex.

Considering that $\mu_A(\mathbf{x}) = \prod_{i=1}^{N} \mu_A(x_i)$ for M-rules it can be written down as: $\mu_A^{(k)}(x) = \prod_{i=1}^{N} \mu_A^{(k)}(x_i)$ procedure of a defuzzifikation concerning the center in a discrete form can be written down as:

$$y = \frac{\sum_{k=1}^{M} y^{(k)} \left[\prod_{i=1}^{N} \mu_A^{(k)}(x_i) \right]}{\sum_{k=1}^{M} \left[\prod_{i=1}^{N} \mu_A^{(k)}(x_i) \right]}$$

As an example we will present forecasting of change of an operational condition of the highway (OCH). We will for descriptive reasons be limited to only two rules and three values of functions of accessory (see figure. 4):

Rule 1: Initial OCH = "below satisfactory" ∧ the Operating influence = "is above high " ⇒ Final OCH = "satisfactory"

Rule 2: OCH = is "satisfactory" ∧ the Operating influence = "high" ⇒ Final OCH = "below good".

Rule 3: OCH = "above satisfactory" ∧ the Operating influence = "above high" ⇒ Final OCH = "good".

VOL. 11, NO. 16, AUGUST 2016 ISSN 1819-6608
ARPN Journal of Engineering and Applied Sciences

www.arpnjournals.com

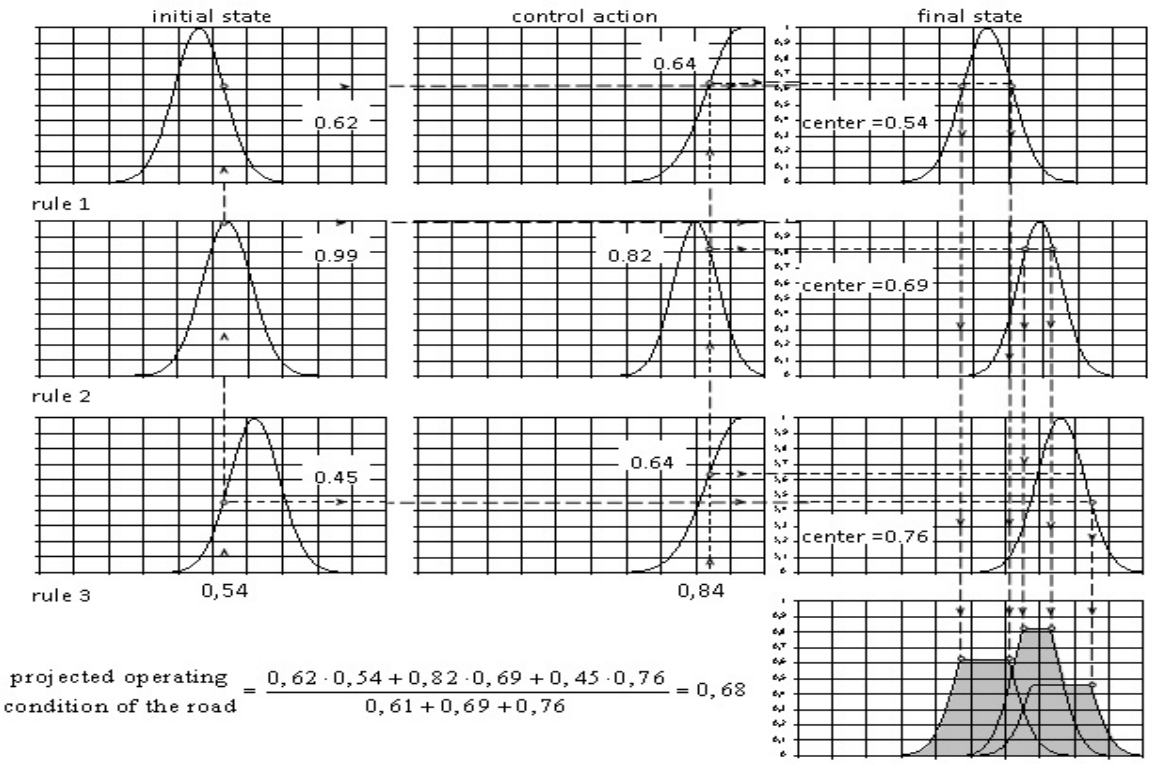

Figure-4. A composite conclusion of the predicted condition of difficult object on the example of OCH.

The main weak spot in an implication method with a conclusion of Mamdani-Zade is subjectivity of creation of a grid of rules and functions of accessory. This defect of a method can be eliminated by creation of the hybrid computing mechanism where implication of Mamdani-Zade is mediated by work of the neural network (NN), with the training mechanism inherent in it.

The artificial neural network represents the parallel computing system consisting of a large number of elementary units of information processing — the neurons accumulating experimental knowledge and providing them for the subsequent processing [9]. The term "training" is understood as ability of NN to receive reasonable result on the basis of the data which weren't found in the course of training. The sequence of training on the basis of procedure of the return distribution according to [8] is presented in Figure-5. This property is used at realization of hybrid indistinct neural network (HINN).

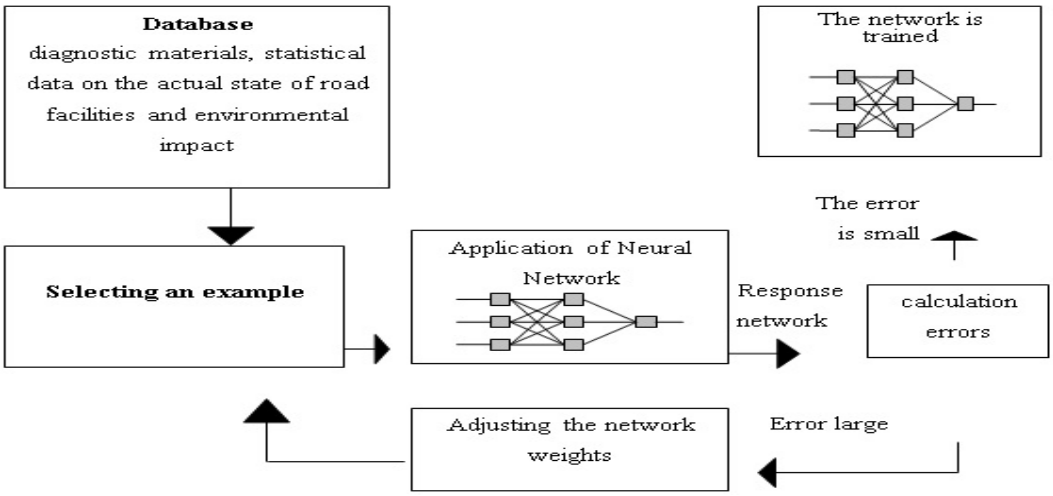

Figure-5. The scheme of training of HINN for forecasting of change of a condition of difficult object in road branch.

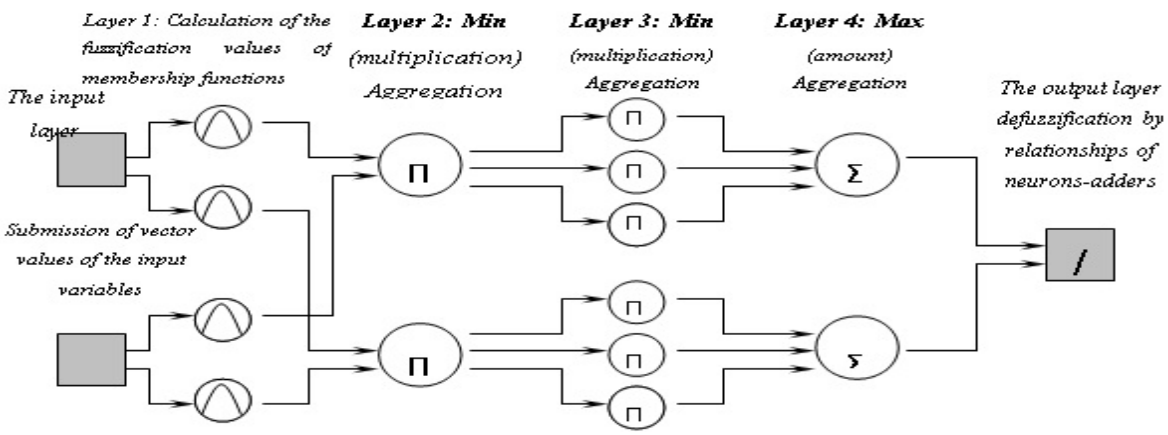

Figure-6. The general scheme of structure of NNS mediating work of indistinct implication on forecasting of a condition of difficult object in road branch with the indication of neurons minimizers and neurons adders.

We will consider sequence of functioning of HINN (Figure-6).

On the first layer the fuzzifikation is carried out. Using as functions of accessory of function of Gauss and considering that generally is available M-rules, the formula of a fuzzifikation looks as follows:

$$\mu_A^{(k)}(x_i) = \frac{1}{1 + \left(\frac{x_i - c_j^{(k)}}{\sigma_j^{(k)}} \right)^{2b_j^{(k)}}}$$

Where k – number of functions of accessory (k=1 … M); j – quantity of variables (j=1 … N); $c_j^{(k)}$, $\sigma_j^{(k)}$, $b_j^{(k)}$ – parameters the center defining respectively, width and a form k functions of accessory j a variable.

Within this work we adhere to an assumption about coincidence of number of rules to number of functions of accessory. But, it is necessary to consider that generally the number of functions of accessory doesn't coincide with number of rules. So if each x_i variable has m-functions of accessory, the maximum quantity of rules which can be created at their combination, will make $M=m^N$.

In the second layer aggregation of values of the x_i variables according to a formula is carried out:

$$w_k = \prod_{j=1}^{N} \left(\frac{1}{1 + \left(\frac{x_i - c_j^{(k)}}{\sigma_j^{(k)}} \right)^{2b_j^{(k)}}} \right)$$

The w_k parameters calculated thus (k=1 … M) at the same time move further in the 3rd layer (for multiplication on weight) and in the fourth layer for calculation of their sum in f_2 neuron.

The third layer when using a conclusion of Mamdani-Zade calculates the centers for k-rules for a formula:

$$y_k = p_{k0},$$

where p_{k0} can be considered as the center of function of accessory of c_k in the Mamdani-Zade model. After that aggregation of a consequence with use of operation of algebraic work is carried out: $w_k \times y_k(\mathbf{x})$.

The fourth layer is presented by two neurons: f_1 and f_2 which are carrying out aggregation of results:

$$f_1 = \sum_{k=1}^{M} w_k \times y_k(\mathbf{x}) = \sum_{k=1}^{M} \left[\left(\prod_{j=1}^{N} \mu_A^{(k)}(x_j) \right) \times c_k \right]$$

$$f_2 = \sum_{k=1}^{M} w_k = \sum_{k=1}^{M} \left[\prod_{j=1}^{N} \mu_A^{(k)}(x_j) \right]$$

The fifth layer is presented by the unique neuron which is carrying out a defuzzifikation:

$$y(x) = \frac{f_1}{f_2} = \frac{\sum_{k=1}^{M} w_k \times y_k(\mathbf{x})}{\sum_{k=1}^{M} w_k} = \frac{\sum_{k=1}^{M} \left[\left(\prod_{j=1}^{N} \mu_A^{(k)}(x_j) \right) \times c_k \right]}{\sum_{k=1}^{M} \left[\prod_{j=1}^{N} \mu_A^{(k)}(x_j) \right]}$$

The detailed scheme HINN used for the solution of the questions connected with forecasting of change of a condition of difficult object in a road complex is submitted in Figure-7.

Synthesis of multilayered NN with an indistinct composite conclusion will allow to realize the algorithm of training correcting subjectively set form of functions of accessory of entrance variables and also governed on the

basis of which the forecast of change of a condition of object is carried out.

The algorithm of training of HINN can conditionally be shared into two stages.

At the first stage parameters of the center of output functions of accessory in the third layer are subject to training. For this purpose when fixing parameters of functions of accessory of the first layer (the center, width and a form) determine parameters of scales proceeding from:

$$\mathbf{y}(\mathbf{x}) = \sum_{k=1}^{M} w_k^{/} p_{k0}$$

It should be noted that output signals **y** HINN replace with reference signals **d** from p of the training selections (the training examples $\mathbf{x}^{(l)}, \mathbf{d}^{(l)}$) where l = 1 … p. Then:

$$\mathbf{w}\,\mathbf{p} = \mathbf{d}$$

Where **w** – the matrix **A** simplified as a result of replacement of a polynom.

Further the decision of system of the equations is carried out on the basis of pseudo-inversion of matrixes:

$$\mathbf{A}\,\mathbf{p} = \mathbf{d}$$

From

$$\mathbf{p} = \mathbf{A}^{+}\mathbf{d}$$

Where A^+ is the pseudo-return matrix to a matrix **A**.

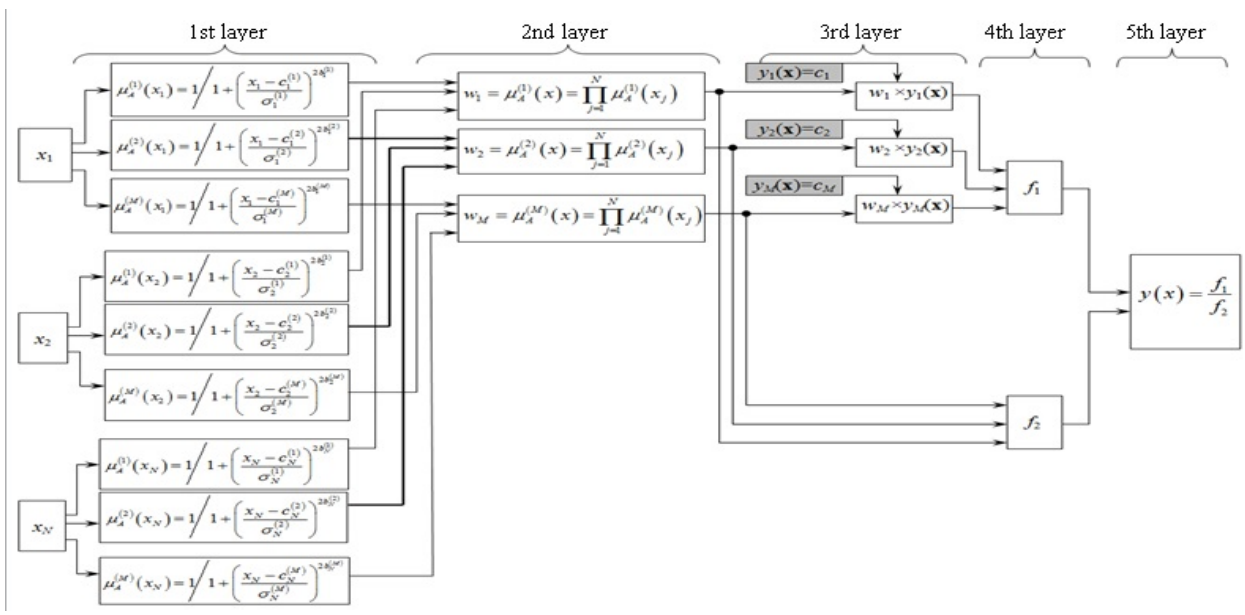

Figure-7. The detailed scheme HINN used for the solution of the questions connected with forecasting of change of a condition of difficult object in a road complex.

Figure-7. The detailed scheme of NSS used to address issues related to the prediction of changes in the state of a complex object in the road complex

At the second stage after fixing of values of linear parameters $y_k = p_{k0}$ calculated the actual exits of HINNy (i) for i=1 … p and a vector of a mistake $\varepsilon = \mathbf{y} - \mathbf{d}$. Further applying a method of the fastest descent formulas for adjustment of parameters of functions of accessory are used:

$$c_j^{(k)}(n+1) = c_j^{(k)}(n) - \eta \frac{\partial E(n)}{\partial c_j^{(k)}}$$

$$\sigma_j^{(k)}(n+1) = \sigma_j^{(k)}(n) - \eta \frac{\partial E(n)}{\partial \sigma_j^{(k)}}$$

$$b_j^{(k)}(n+1) = b_j^{(k)}(n) - \eta \frac{\partial E(n)}{\partial b_j^{(k)}}$$

where n – number of iteration; η – training speed parameter.

The concept considered above formed the basis of predictive models in difficult organizational systems of a road complex. We will consider them in more detail.

In work [7] the method of forecasting of number of road accident depending on three indicators is realized: automobilization, transport and operational condition of

VOL. 11, NO. 16, AUGUST 2016 ISSN 1819-6608
ARPN Journal of Engineering and Applied Sciences

www.arpnjournals.com

highways (TOCH) and population density. The program realizing HINN and the algorithm of training given above was developed for realization of algorithm.

The amount of neurons of the first layer made 18, and number of rules to 9. Having carried out training of HINN on the basis of statistical data on 75 regions the forecast of number of road accident for five regions which weren't participating in process of training of HINN was carried out (see Figure-8).

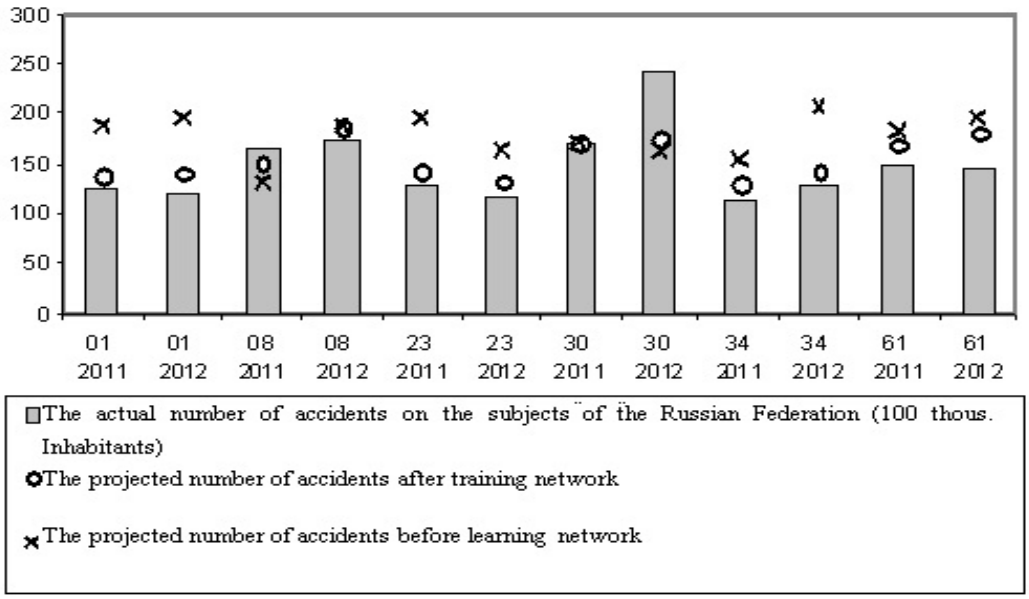

Figure-8. Results of forecasting of number of road accident on 6 subjects.

The Russian Federation not participating in training process

Results of work of HINN testify to the acceptable accuracy of the forecast of number of road accident of the region (a mistake ~ 13%). The developed model allowed to determine consistent patterns of influence of level of automobilization, TOCH and population density, on accident rate.

In work [6] the problem of ensuring needs of the city for asphalt concrete mixes from the point of view of modeling of a dislocation and power of asphalt concrete factories in city conditions is considered. On the basis of application of HINN and optimization with the accounting of the factors presented decides a choice of a place of a dislocation and power of ACP for ensuring needs of the city for asphalt concrete mixes on Figure-9.

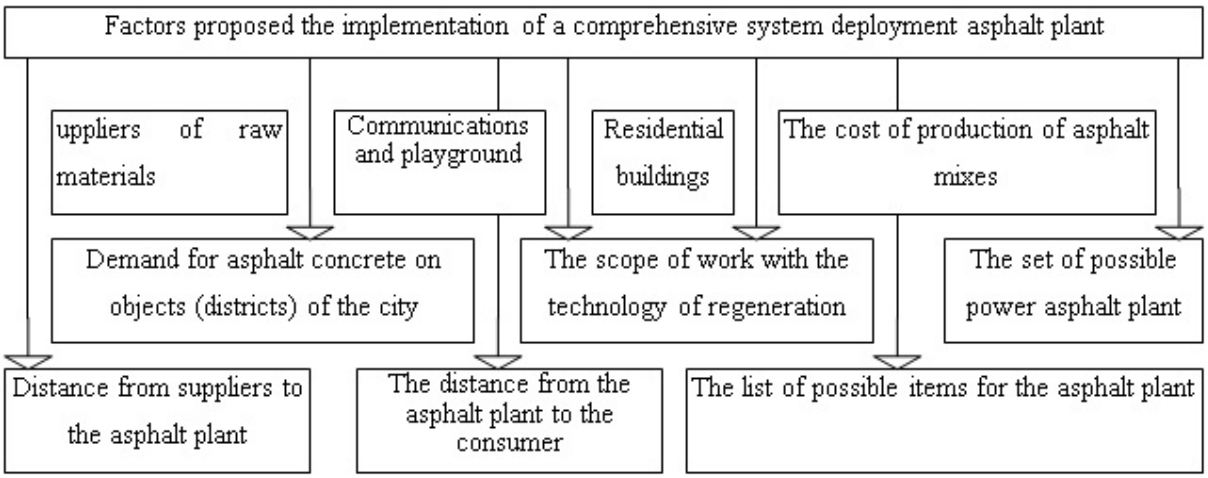

Figure-9. The scheme of the factors offered at creation of system of optimization of a dislocation and power of city ACP.

The offered approach allowed to minimize cumulative production and transport expenses when ensuring needs of a city network of highways for asphalt concrete mixes.

The greatest attention is deserved by a technique of forecasting of OCH as a basis of system of support of decision-making in a road complex[3].

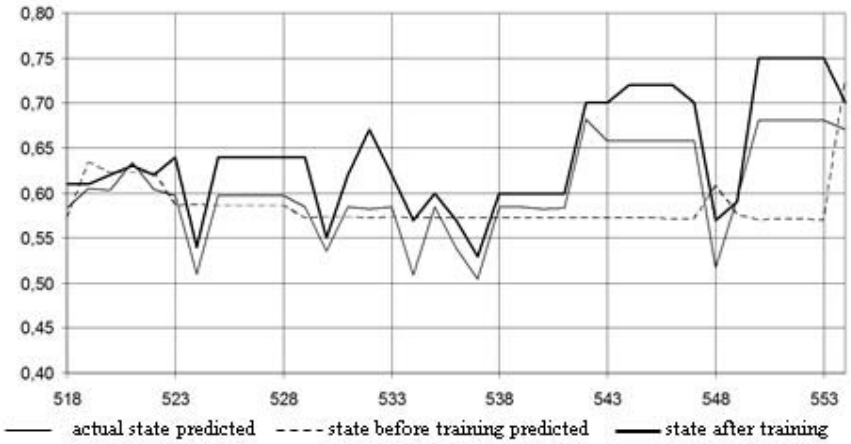

Figure-10. Forecast of OCH of the 3rd technical category before training in comparison with the actual value of OCH.

The result of the forecast of OCH after training of system is given in figure. 10. Therefore, it is possible to draw a conclusion that HINN and the system of forecasting created on its basis the OCH, allow to increase up to the demanded size the accuracy of work of model of forecasting of change of OCH. Possibility of exact modeling of change of OCH at a stage of scheduling allows to increase efficiency of the organization of a roadwork significantly.

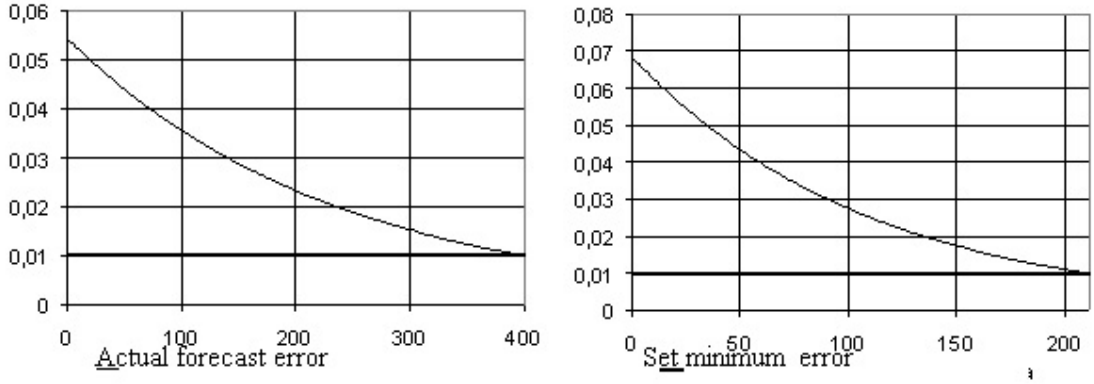

Figure-11. Reduction of the prediction error during training forecasting models with three inputs at a rate of 0.1-0.05.

CONCLUSIONS AND FURTHER PROSPECTS

Summing up the result of the done work it is possible to draw the following conclusions:

- The general concept of an indistinct neural network, for the solution of predictive tasks in a road complex is realized.
- The general structure of an indistinct neural network in relation to such major areas of road branch as on a factorial assessment of accident rate, placement of production base of road economy and forecasting of an operational condition of highways is adapted.
- It is established that the forecast error after training of HINN is accepted and makes 10-15% depending on concrete subject domain thus the speed of information processing is considerable (Figure-1).
- The predictive models presented in work are a basis for development of systems of management of the corresponding objects and processes in road branch.

On the basis of the developed algorithms and models authors conduct further work on creation of complex system of support of decision-making for management of difficult objects in a road complex which

will promote receiving considerable social and economic effect in branch.

This work was supported by Russian Foundation for Basic Research (grants № 15-07-01720, № 15-37-50142, 15-57-54033) and the Ministry of Education of Russia within the base part of State Task (project 2586 task № 2014/16) ».

REFERENCES

[1] Zade L. concept of linguistic variable and its application to the adoption of the approximate solutions. M .: Mir, 1976. 165 pp.

[2] Zaichenko Y.P. Fuzzy models and methods in intelligent systems. K .: Publishing House "Word", 2008. 344 pp.

[3] SkorobogatchenkoD.A The method of predicting the operational status of roads on the basis of the concept of fuzzy sets neural networks // Proceedings of the higher educational institutions. Building. 2011. № 2. pp 72-77.

[4] SkorobogatchenkoD.A Simulation of changes in the operational status of roads in view of qualitative information // Industrial and civil construction. 2011. № 4. C. 40-42.

[5] SkorobogatchenkoD.A Management of operational condition of highways in view of qualitative information // Bulletin of Moscow State Automobile and Road Technical University. 2011. № 2 (25). S. 78-84.

[6] Skorobogatchenko D.A, Borovik M.S Modeling of the problem placing asphalt plants in urban areas // Herald of Volgograd State University of Architecture and Civil Engineering. Series: Building and Architecture. 2015. № 39 (58). Pp 213-223.

[7] Skorobogatchenko D.A. Erokhin A.V. Fuzzy neural network model to predict the number of accidents in the region in the conditions of limited information // Herald of Volgograd State University of Architecture and Civil Engineering. Series: Building and Architecture. 2014. № 36 (55). Pp 174-181.

[8] Wasserman F. Neurocomputing Technology: Theory and Practice. M .: Mir, 1992. 240 pp.

[9] Haykin S. Neural Networks. Full course. M .: Publishing House Williams, 2008. 1103 p.