VOL. 11, NO. 16, AUGUST 2016 ISSN 1819-6608
ARPN Journal of Engineering and Applied Sciences

www.arpnjournals.com

MODELING AND ANALYSIS OF SEMI-ACTIVE HYDRAULIC ENGINE MOUNT USING FINITE ELEMENT ANALYSIS

V. Velmurugan, T. S. A. Suryakumari, A. Pandiyan and V. Jayakumar
Department of Mechanical Engineering, Saveetha School of Engineering, Saveetha University, Chennai,Tamilnadu, India
E-Mail: profvel@gmail.com

ABSTRACT

It is well known that the problem of Noise and vibration is one of the major issues in the automobiles and particularly in the diesel engine vehicles. The diesel engine vehicle usage is been increased due to the fuel economy and mileage. But the main disadvantage is the vibration and noise that arises in the engine, whereas it is more in the diesel engine when compared to the petrol engine. It is well known that the power train is the main source of the vibration producing part in the vehicle and which is been mounted on the engine frame that supplies the power to the vehicle. The part that connects the engine and the chassis is the engine mount that plays a vital role in transmission of the engine vibration to the vehicle structure which has to be designed in such a way that the vibration and noise from the engine powertrain can be isolated, here we are going to use a semi-active hydraulic engine mount that reduces the vibration of the engine and subsequently do the modeling and analysis of the semi-active hydraulic engine mount and to compare with the mount characteristics of the other types of engine mounts that are available and conclude that the semi-active engine mount is one of the feasible component to reduce the vibration inside the cabin of the diesel engine passenger car.

Keywords: noise, vibration, engine, engine mount, vibration isolation, modeling, analysis.

INTRODUCTION

The automobile engine–chassis–body system may undergo undesirable vibrations due to disturbances from the road and the engine. The vibrations induced by the road or the engine at idle are typically at the frequencies below 30 Hz. In order to control the idle shake and the road induced vibrations, the engine mount should be stiff and highly damped. On the other hand, for a small amplitude excitation over the higher frequency range (30-250 Hz) from the engine, a compliant and lightly damped mount is required for vibration isolation and acoustic comfort. So, the engine mount must satisfy these two essential but conflicting criteria. This disparity between isolation characteristics and control characteristics has profoundly changed the way in which the automobile industry approaches mount design.

AUTOMOTIVE ENGINE MOUNTS

Automotive engine mounts are required to constrain engine shaking motions resulting from shock excitations, and also to isolate noises and disturbed vibrations generated by the unbalanced engine. The engine shake vibration frequency is low with a large vibration amplitude, whereas the vibration frequency as shown in Figure-1

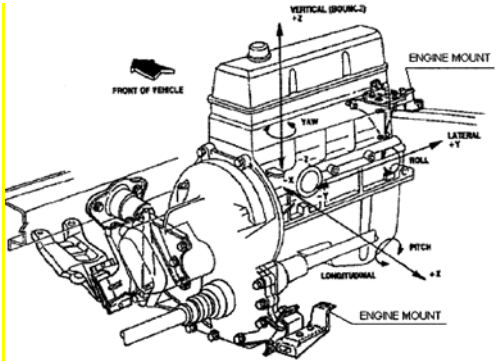

Figure-1. Engine and engine mount layout.

of the unbalanced engine is high with a small vibration amplitude. High damping and stiffness are needed to reduce the engine shake vibration; however, low damping and stiffness are required to reduce the noises and unbalanced vibrations [1-4] Damping of using a conventional rubber is not enough to isolate the engine shake. Therefore, hydraulic mounts with inertia tracks have been developed both to increase the damping in the low frequency range and to reduce unbalanced vibrations [5]. To absorb these noises and provide a smooth ride, manufacturers use three kinds of engine mount: active, semi-active, and passive. Normally, high amplitudes are induced by engine at idle and low speeds, while at higher speeds, the engine creates lower amplitude.

ELASTOMERIC MOUNT

Elastomeric mounts, which are made of rubber, have been used to isolate engine since 1930s. A lot of changes have been made over the years to improve the performance of the elastomeric mounts. For proper vibration isolation, elastomeric mounts are designed for

the necessary elastic stiffness rate characteristics in all directions. They are maintenance free, cost effective and compact. The elastomeric mounts can be represented by a Voigt model which consists of a spring and a viscous damping as shown in Figure-2 It is difficult to design a mounting system that satisfies a broad array of design requirements. A mount with high stiffness or high damping rates can yield low vibration transmission at low frequency, but its performance at high frequency might be poor. On the other hand, low stiffness and low damping will yield low noise levels but it will induce high vibration transmission. A compromise is needed to obtain balance between engine isolation and engine bounce. In order to achieve low vibration transmissibility, the mount stiffness must be as low as possible. However, this causes increased static deflection. Lower damping is also desirable for lower transmissibility at higher frequency range. One the other hand, handling and maneuverability are enhanced with higher stiffness. Elastomeric mounts provide a trade-off between competing requirements of low static deflection and enhanced vibration isolation.

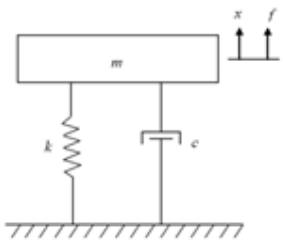

Figure-2. Model of elastomeric mount.

PASSIVE HYDRAULIC ENGINE MOUNT

Hydraulic mounts were first introduced in 1962 for use as vehicle mounting systems. Since then, their popularity has improved for two reasons. The first one is that the current vehicles tend to be small, lightweight and front wheel drive with low idle speeds. The second one is that the hydraulic mounts have developed into highly tunable devices. Three types of hydraulic mounts are in use these days and these are: hydraulic mount with simple orifice, hydraulic mount with inertia track, and hydraulic mount with inertia track and decoupler. A general schematic diagram of the hydraulic mount is shown in Figure- 1.2. Although there are differences between orifice and inertia track mounts, all of them cause damping at low frequency ranges. These mounts can be tuned to have high damping at the shock excitation frequency which is used to reduce the elastomeric mounts. Although the damping in these mount is high at low frequency, the isolation at higher frequencies is degraded. This problem is handled by adding a vibration levels. The dynamic stiffness of these mounts is usually higher than that of thede-coupler to the hydraulic mount which operates as amplitude limited floating piston. It allows the mount to behave like an elastomeric mount to provide good vibration isolationat large displacement. On the other hand, it allows it to behave like a normal hydraulic mount providing the damping for shock excitation.

ACTIVE ENGINE MOUNTS

In active vibration control, a counteracting dynamic force is created by one or more actuators in order to suppress the transmission of the system disturbance force. General active mount consists of a passive mount (elastomeric or hydraulic), force generating actuator, a structural vibration sensor and an electronic controller. The passive mount is used to support the structure in case of an actuator failure. The controller can either be feedback or feed forward. The vibration control is implemented with a closed loop controller that utilizes the sensor measurement. The mechanical models of elastomeric and hydraulic active mounts are shown in Figure-3.

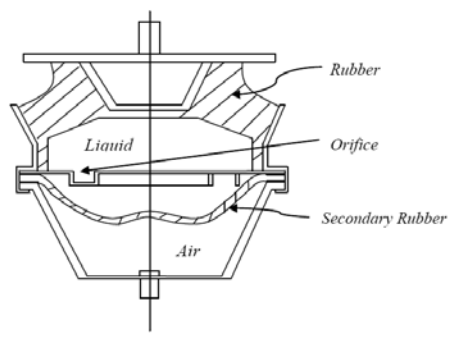

Figure-3. Cross sectional view of engine mount.

The active mount stiffness is equivalent to the stiffness of the passive mount (elastomeric or hydraulic). The active mounts can overcome the limitations of passive mounts. Active elastomeric mounts can be very stiff at low frequencies and very soft at high frequencies. Meanwhile the active hydraulic mounts can be tuned to achieve adequate damping at engine bounce frequency and have very low dynamic stiffness at high frequency. Semi active mounts are used to improve the low frequency features of the system like increasing damping. By providing superior isolation, active engine mounts can allow large engine vibration levels. This may reduce balance shaft requirements and enable the vehicle chassis to be lighter.

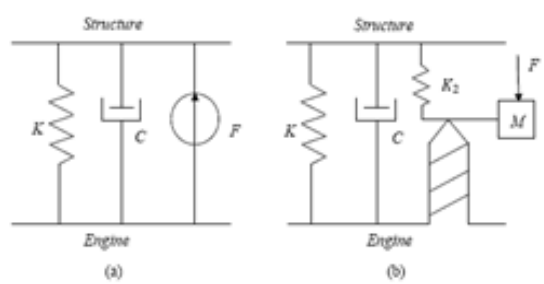

Figure-4. Model of (a) elastomeric mount and (b) active hydraulic mount.

SEMI-ACTIVE ENGINE MOUNTS

Semi-active hydraulic engine mounts are created to improve the dynamic performance of conventional hydraulic mounts. Elastic stiffness and damping parameters can be controlled and, as a result, the dynamic response of a mount can be adjusted based on the desired performance. Shoureshi introduced a typical example of a semi-active hydraulic engine mount that contained an external bleed to adjust the spring and damping parameters. In this mechanism, they controlled the system resonance frequency by changing the pressure of fluid injection and by restricting the orifice. Passive engine mount with controllable parameters and mechanism is defined as a semi-active engine mount system. The benefit of these kinds of mounts is that, if the controllable parameters stop working properly, they can still perform as a passive hydraulic engine mount, thereby giving higher reliability than the conventional model. Two kinds of smart material are used by manufacturers in semi-active mounts: Electro-rheological (ER) and Magneto-rheological (MR) fluids. These materials have similar characteristics due to their resistance to flow and their energy dissipation. In some cases, an on-off solenoid valve is added to change the passive mount to a semi-active mount Winslow developed ER fluids by blending semi-conducting particles and a dielectric carrier liquid. Studies on the ER engine mount in terms of its feedback control characteristic of shear mode. The noise absorption capability of their proposed model due to random and sinusoidal excitation has been observed. By using an electro-viscometer, they could determine experimentally the value of the field-dependent yield shear stress of ER fluid, and then implemented the stress into the equation of motion of engine mount. Because of the high working voltage consumption of ER, industries often hesitate to use it. MR fluids are a mixture of magnetically polarizable materials located in a low viscous fluid media [8]. Rainbow discovered that the viscosity of these materials can be adjusted by changing the external magnetic field. The yield strength of MR fluid is 50-100 kPa; and if we remove the magnetic field, MR fluid behaves like Newtonian fluid. Peel *et al*. were the first to illustrate the capability of MR fluid in noise isolation. Mathematical and mechanical models of MR fluid were derived by Jolly and Davis after industries started to use MR fluid in various applications in the 1980s. William was the first to create a semi-active engine mount; they simulated it mathematically along with experimental results they obtained with their test setup.

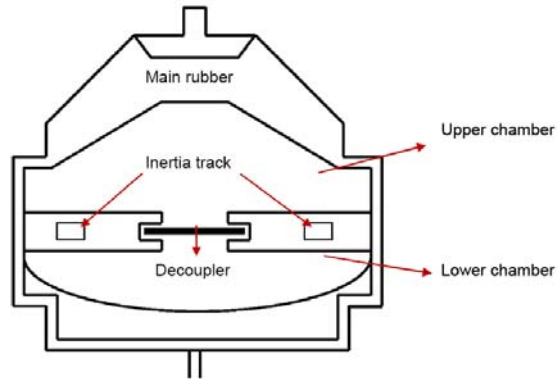

Figure-5. Semi-active engine mount 2D view.

CHARACTERISTICS OF THE MOUNT

An engine mount is a vehicle component widely used to attach the engine bracket to the chassis and isolate the power train from road excitation in the vertical direction and torque excitations from the engine around crankshaft. One advantage of the hydraulic engine mount is to provide high damping at certain frequencies. The main factors in designing the hydraulic engine mount (HEM) are: the influence of characteristics of the HEM's rubber spring, the fluid viscosity and density and the geometry of inertia track and decoupler along with the ratio of the maximum dynamic stiffness to the stiffness of the HEM [7].

All these factors must be estimated with the effective models and methods. The engine is connected to the car's chassis by several mounts, which are important for smooth operation of the vehicle. With today's developments in technology, engine mounts come in different sizes and types.

MATHEMATICAL MODEL

The semi-active hydraulic engine mount was proposed which is the mount consists of a rubber structure with two fluid chambers, an upper chamber (main chamber) and a lower chamber (compression chamber), and a controllable inertia track area. The area is controlled by using a linear actuator. The fluid flows from the top chamber to the bottom chamber through the inertia track. The area change through the displacement of a moving disk. According to the position of the moving disk

VOL. 11, NO. 16, AUGUST 2016 ISSN 1819-6608
ARPN Journal of Engineering and Applied Sciences

www.arpnjournals.com

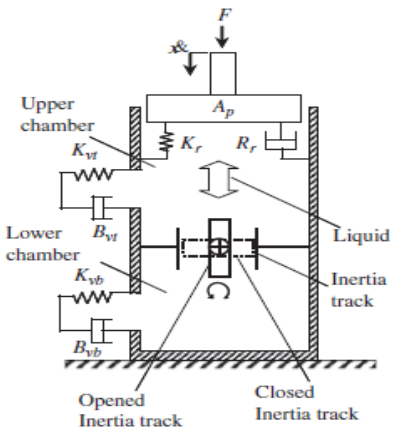

Figure-6. Mathematical model view.

The area value is computed by a linear relationship. There are two limit sensors used to set the limited positions of the moving disk. The upper-limit position and the under-limit position of the moving disk equals 0 percent (closed) and 150 percent (largest) of the area, respectively.

SMART MATERIAL FLUID USED

Smart materials are currently used in the engine mount as the isolator which the materials are having the controllable properties that changes by external stimuli such as magnetic fields, stress, temperature, moisture and electric field etc. These smart materials can be classified as two types one is the magneto rheological (MR) fluid and another one is the Elecgtrorheological (ER) fluid. Since the ERF and MRF has characteristic to change their properties to from soft to hard and hard to soft therefore it was well-known as the vibration isolator devices since there is some draw back in the ER fluid we are going to concentrate on using the MR fluid for the application in the semi-active engine mount.

FEA MODEL OF THE SEMI-ACTIVE ENGINE

UPPER RUBBER PART

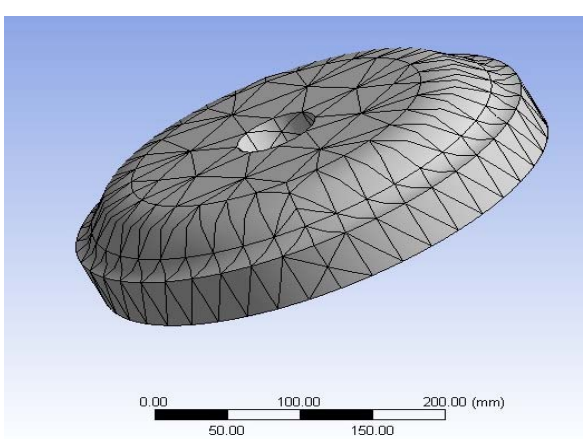

Figure-7. Meshed part of the upper chamber.

The upper part of the semi-active engine is a rubber material and is chosen in such a way that it can be meshed by using the rubber part and the mesh the solid that is chosen is the solid element with eight nodes and has the compatibility in connection with the subsequent part the circumference of the material is been constrained and the force is given with

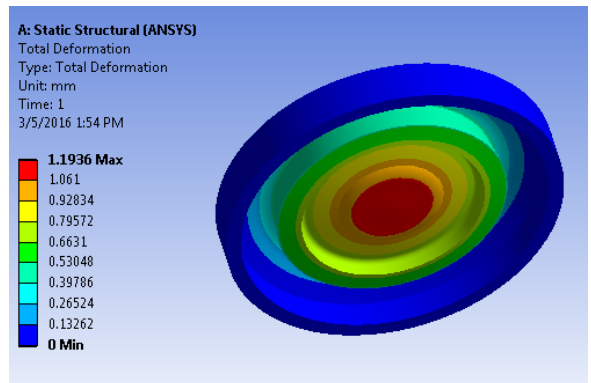

Figure-8. Static analysis of the upper chamber.

the pressure of 1900 N on the upper surface and the stress strain diagrams are obtained in addition to the total deformation of the structure individually the model is been created in the CATIA V5 and it is been converted to the IGES file that can imported to the ANSYS work bench and the contour diagram are shown in Figure-8.

LOWER PART

The lower part is the part which is the part made of the steel material and which gives the damping compliance to the structure and it's been modeled using the dimensions and created, this is then meshed in the ANSYS with the solid

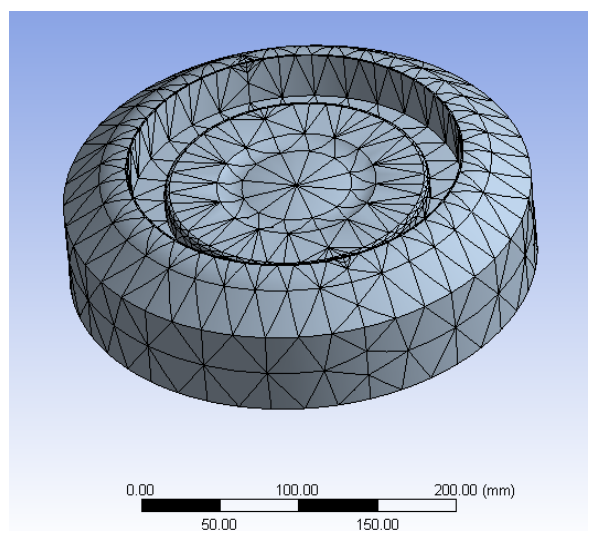

Figure-9. Finite element mesh of the lower chamber.

element of solid with 8 nodded that can give a better result when it is undergoing a deformation due to the pressure that is coming on it by the fluid that is been used this solution give a look on how the lower chamber of the mount will reaction and deform with the stress and strain. The lower part is one of the part of the semi-active engine mount which acts as the compliance part that absorbs the compliance of the mount and makes the fluid to move in the part with the pressure and has the capacity for the flexibility the characteristic of the mount. The lower part is the damping component of the mount and has the flexibility towards the force acting on the upper part of the mount

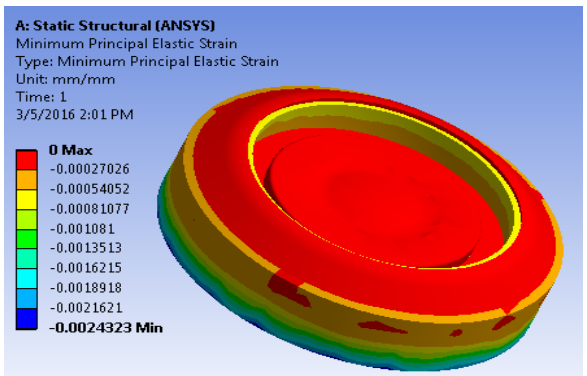

Figure-10. Static analysis of the lower chamber.

ASSEMBLED MODEL ANALYSIS

As we have the parts of the semi-active engine to be analysed individually and checked the behavior and deformation now the assembled view of the upper, lower

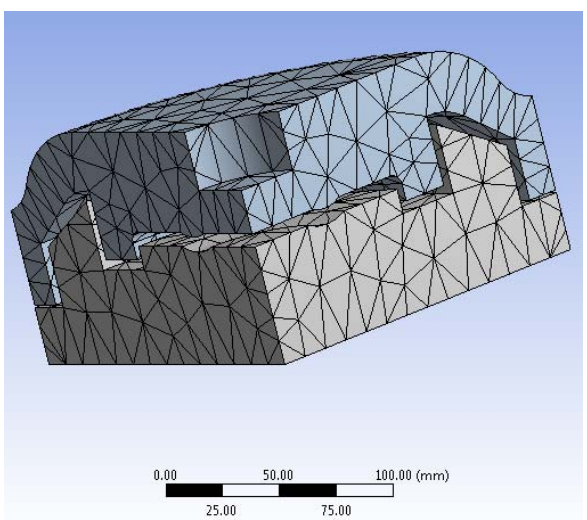

Figure-11. Assembled meshed 3D quarter model.

and the inertia chamber is been made assembled and since it is a symmetric structure the quarter part of the model has been taken into consideration for the analysis and the circumference of the model on the right and left side say the outer edge of the parts has been taken as the boundary conditions and the load on the upper chamber and lower chamber is been applied to see the stress and strain variation and also the total deformation of the par and give the values of the maximum and minimum stress and strain which is been refer in the Figure-9.

RESULT OF STATIC ANALYSIS

The structure model and the solid model are meshed with 8/1 element (8-node tetrahedron element with one pressure variable), respectively. The maximum size of the element for the structure and the fluid model are 6 and 5 mm, respectively, and the total numbers of elements and nodes are 15674 and 11, 244, respectively, including 18972 elements and 3387nodes for the fluid model. The total numbers of degree of freedoms are 46789. The force versus displacement relations in the vertical direction of HEM obtained from calculation and analysis are shown in Figure-12. As the figure indicates, the calculation result matches measurement reasonably. The deformation of the structure and the fluid pressure distribution are shown, when the HEM bears the vertical preload of 1900 N. As Figure-13 illustrates, the pressure distribution in the chambers and the inertia track is nearly uniform and a pre-pressure exists in the fluid under the preload.

RESULT OF DYNAMIC ANALYSIS

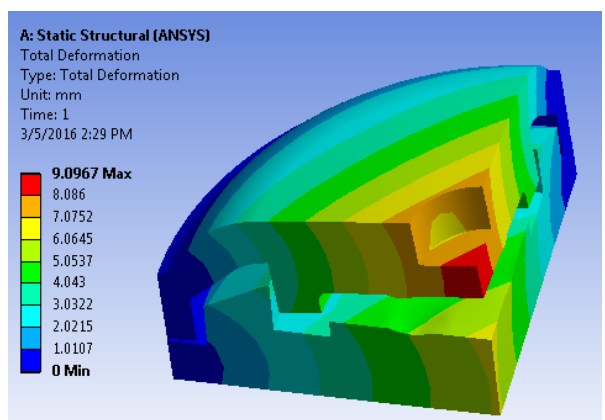

Figure-12. Static analysis of the 3D assembly model.

The dynamic force F(t) transmitted to the fixed face of the rubber spring can be predicted using FEA models. Figure-13 compares measured and estimated F(t)shows, predication matches measurement well. Under the excitation of 10 Hz and 2.0 mm, the pressure distributions of the chambers and the inertia track. The cross-sectional pressure distributions at different height of the upper chamber for typical excitation frequencies and2.0 mm excitation amplitude are given. It can be concluded from Figure-8 that the pressure distribution

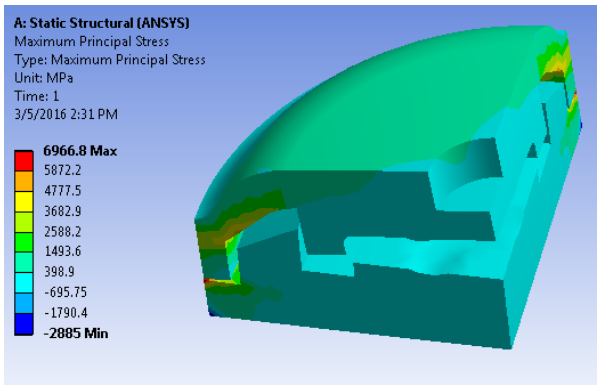

Figure-13. Dynamic analysis of 3D assembled model.

in the upper and lower chamber is nearly uniform, which validates the assumption that the pressure distribution is

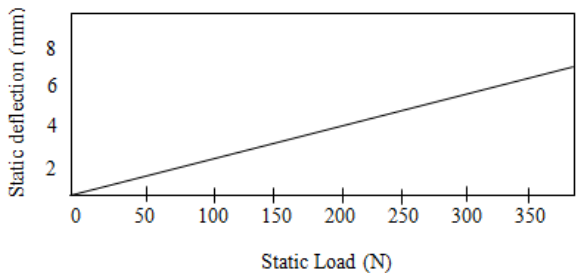

Figure-14. Static deflection vs load.

uniform in the chambers are shown. The pressure gradient in the inertia track is notable, which is in coincidence with the mechanism of HEM. Figure-14 shows the upper and lower chamber pressure at 10 Hz for 2.0 mm excitation. It is seen that the pressure change of the lower chamber is much smaller than that of the upper chamber, and the pressure phase delay of the lower chamber to the upper chamber is noticeable. Application of FEA techniques in predicting the performance of SHEMs in its design stage is advisable.

CONCLUSIONS

The method for measurement of the static and dynamic Performances of an SHEM and its rubber springs presented. The experimental performances of two configurations of take-apart HEMs and their rubber spring are given. As a result of our special effort, the dynamic fluid pressure in the upper chamber and the temperature in chambers of an HEM are measured under different excitation conditions. The experimental temperature results show that the influence of fluid viscosity variation on the performance of an HEM is negligible in normal operation condition. The proposed FSI FEA model can be used to simulate and optimize the performance of the HEM in the design stage. The model makes the modeling method for HEMs to the state-of-the-art. Future work should be carried out on simulation of the HEM for high-frequency and small-amplitude excitations.

REFERENCES

[1] J. Colgate, T. Chang, C. Chiou, K. Liu, and M. Kerr. 1995. Modelling of a hydraulic engine mount focusing on response to sinusoidal and composite excitations. Journal of Sound and Vibration. 184: 503-528.

[2] Mahmoud S. Foumani, Amir Khajepour and Mohammad Durali. 2004. “A New High-Performance Adaptive Engine Mount”, Journal of Vibration and Control. Vol. 10, pp. 39-45.

[3] Wen-Bin Shangguan and Zhen-Hua LU, 2004. “Experimental study and simulation of a hydraulic engine mount with fully coupled fluid-structure interaction finite element analysis model”, Computers and Structures. 82, pp. 1751-1771.

[4] R. Singh, G. Kim and P. V. Ravinder. 1992. “Linear analysis of automotive hydro-mechanical mount with emphasis on decoupler characteristics”, Journal of Sound and Vibration. 152(2), pp. 219-243.

[5] G. NakhaieJazar and M. FaridGolnaraghi, 2002 “Nonlinear Modeling, Experimental Verification, and Theoretical Analysis of a Hydraulic Engine Mount”, Journal of Vibration and Control. 8; pp. 87-116.

[6] Y.H. Yu, S.M. Peelamedu, N.G. Naganathan and R.V. Dukkipati. 2001. Automotive vehicle engine mounting systems: a survey, Journal of Dynamic systems, Measurements, and Control. 123, 186-194.

[7] G. Kim and R. Singh. 1995. A study of passive and adaptive hydraulic engine mounts systems with emphasis on non-linear characteristics, journal of sound and vibration. 179(3) 427-453.

[8] Tikani, R., *et al*., 2010 A New Hydraulic Engine Mount Design Without the Peak Frequency. Journal of Vibration and Control. Vol. 17(No.11): p. pp. 1644-1656.

[9] Barszcz B., J.T. Dreyer, and R. Singh. 2012. Experimental study of hydraulic engine mounts using multiple inertia tracks and orifices: Narrow and broad band tuning concepts. Journal of Sound and Vibration. 331(24): 5209-5223.