VOL. 11, NO. 19, OCTOBER 2016 ISSN 1819-6608
ARPN Journal of Engineering and Applied Sciences

www.arpnjournals.com

STUDIES ON STANDALONE PHOTOVOLTAIC POWER SYSTEM FOR CHARGING THE BATTERY

K. Bhaskar[1], K. Siddappa Naidu[1] and N. G. Ranganathan[2]
[1]Department of Electrical and Electronics Engineering, Chennai, India
[2]Department of Chemistry Vel Tech University, Avadi, Chennai, India
E-Mail: bhaskark@veltechuniv.edu.in

ABSTRACT

An attempt has been made to charge the battery with P-V module obtained from a company. Initially P-V characteristics have been carried out for five different solar intensities and for four different temperatures. P-V characteristics have also been done for five different Shunt resistances and three different series resistance which will form the basis of equivalent circuit of a solar panel charger used to charge the battery circuit. Three different modes of charging the battery have also been tried. Results are presented in this communication.

Keywords: photovoltaic (PV), photovoltaic generator (PVG), modeling, validation, battery charging.

INTRODUCTION

Solar oriented vitality has gotten much consideration as of late. Sun based radiation can be changed over into helpful vitality straightforwardly by utilizing different advances. An attempt has been made in this work by converting solar radiation directly into electricity using PV (photovoltaic) system. [1-11].

A PV power era framework alludes to a framework principally made out of a force conditioner, a force transmission and dissemination framework. Occurrence sunlight based vitality on the photovoltaic module is changed over into a power output. In the present work the aim is to charge a lead acid battery of 2V, 10 Ah. The module simulation can be made by some sort of algorithms like Fuzzy [12], Neural [13], and Neural-fuzzy [14]. In the present work a photovoltaic power generation system, a PV module simulator having identical output characteristics is obtained from an industry located near our place and the system is used as such to carry out the present targeted work of charging a battery of aforementioned specification. The photovoltaic module provided by the industry consists of series parallel connection to form a PV module array for performing experiments on maximum power point tracking (MPPT) studies [15]. The characteristics of the photovoltaic generator used are provided in Table-1.

Table-1. Characteristics of the photovoltaic generator.

specification	1000W/m^2 25^{0}C AM1.5
Series Numbers	95090144
Total Number of panels	16
Maximum Power	75W
Current of SC(short circuit) I_{sc}	10A
Tension of OC (open circuit) V_{oc}	36V

The simulated data, provided by the industry, are given in Figure-1 to Figure-4.

Figure-1 gives the present voltage (I-V) qualities of a PV module for five diverse illumination at temperature 45 0 C. Figure-2 demonstrates the P-V normal for reenacted module with one illumination level Viz., 1000W/m2 at four diverse temperature as showed in the chart. It is seen that the yield attributes of the sun powered module is nonlinear. It likewise relies on upon sun oriented illumination, temperature. To expand power from sun based module it must be worked at altered estimation of voltage and current which is characterized by the maker. This needs DC-DC converter circuit to track greatest force from PV module which can be obtained from the Figure-1.

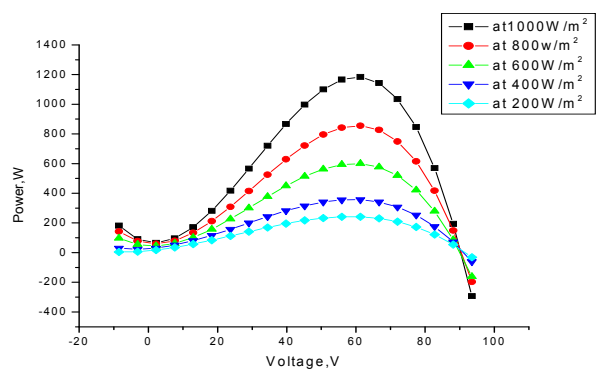

Figure-1. P-V qualities for a module at 45^{0}C for five diverse sun powered intensities.

ARPN Journal of Engineering and Applied Sciences

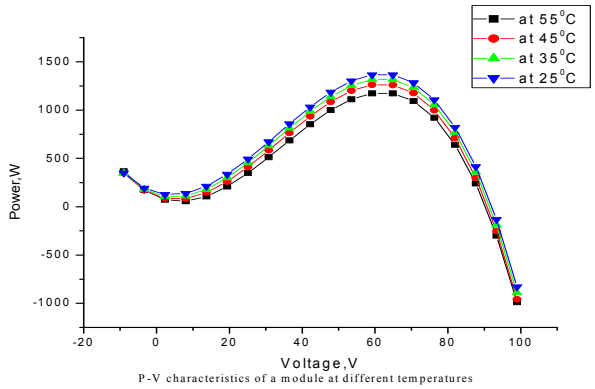

Figure-2. P-V attributes of a module at various temperature.

PV module generator is made up of 16 modules each containing 36 cells connected in series. The maximum power of the system is 1.2kWc. Its optimal output voltage and current are of 68V and 18A. Figure-3 and Figure-4 provided by the Industry are for a PV module generator that combines M_s = 4 modules in series and M_p = 4 modules in parallel, and the Series Resistance R_s =0.177 Ω and Shunt Resistance R_{sh} = 220Ω.

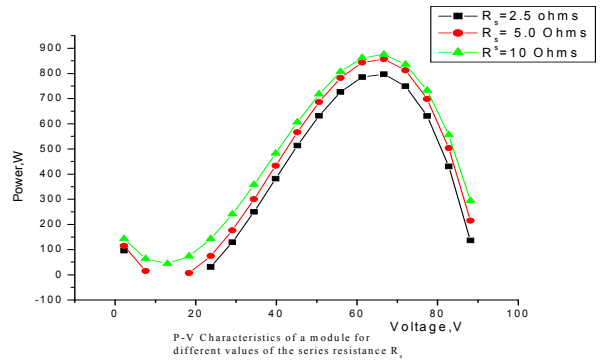

Figure-3. P-V qualities of a module for various estimations of the arrangement resistance Rs.

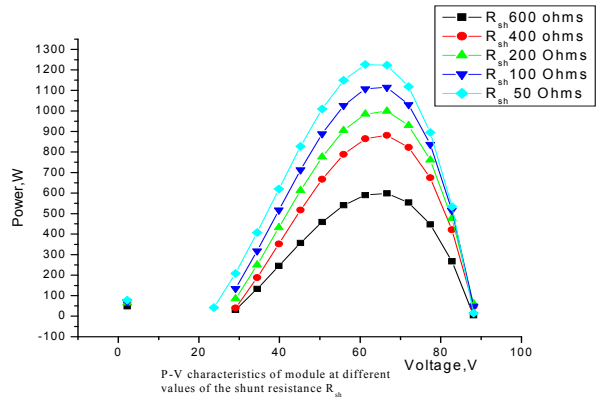

Figure-4. P-V attributes of a module for various estimations of the Shunt resistance R_{Sh}.

With the PV module supplied by the industry a charge controller is added for charging the lead acid battery [1]. The most fundamental capacity of a charge controller is to anticipate battery cheating. On the off chance that the battery is permitted to routinely cheat its future will be enormously decreased. The capacity of the charge controller is to sense the battery voltage and it will empower to lessen or stop the charging current when the voltage gets high. For this situation the charge controller will basic open or limit the circuit between the PV cluster framework and the battery when the voltage has ascended below the set level. The testing of the charging the battery has been done at three different conditions. Viz. Connection to the panel directly to the battery as provided in Figure-5.

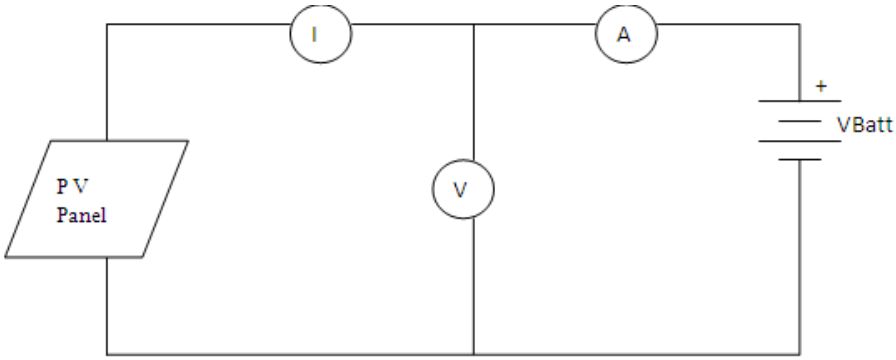

Figure-5. PV panel directly connected to battery.

a) Connection to the panel to the battery through an ordinary charger as provided in Figure-6.

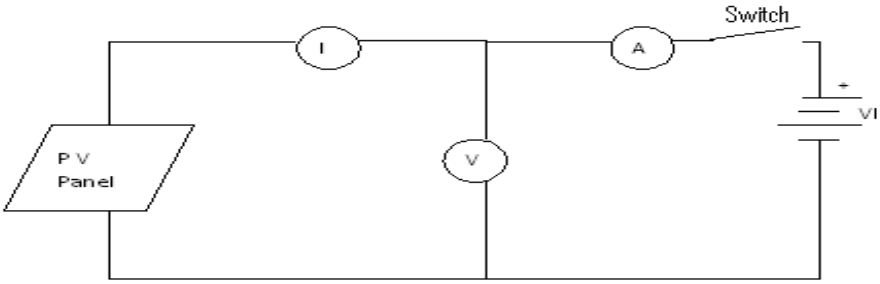

Figure-6. P V panel directly connected to battery through an ordinary switch.

b) Connection to the panel to the battery with MPPT.

The same battery used for all the three conditions .The results are provided in Figures 5 to 10

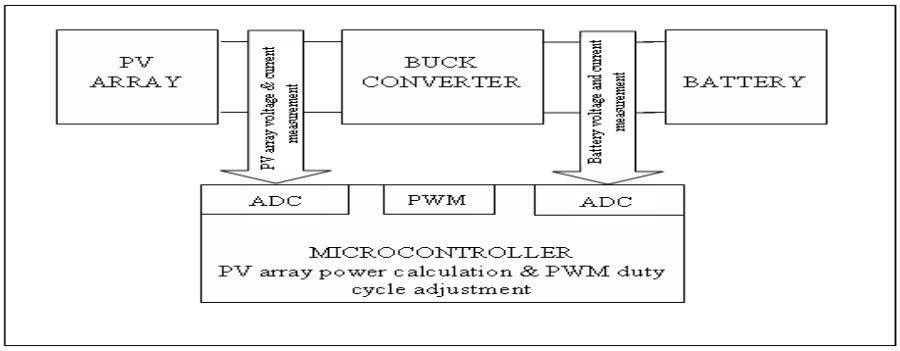

Figure-7. PV panel connected through MPPT charger to battery.

From the Figure-8 and Figure-9 it is clear that the battery is not charged to 100 % SOC (state of charge). It is clear that the battery charging time is more than 8 hours. This may be due to inefficient charging control. From the Figures 10 and 11 it is clear that the battery is charged to a certain extent and it is clear that this system does not track the varying output of the panel and hence there is still a loss of energy because of the mismatch between the panel and battery and change in output power of the panel with respect to sun irradiation and temperature. From the Figures 12 & 13 it is clear that the loss of energy is minimized to a large extent and the battery is charged quickly compared to other two cases and thus the controller is an efficient one for battery charger and thus it can be seen that employing MPPT system results into an efficient charge controller.

VOL. 11, NO. 19, OCTOBER 2016 ISSN 1819-6608
ARPN Journal of Engineering and Applied Sciences

www.arpnjournals.com

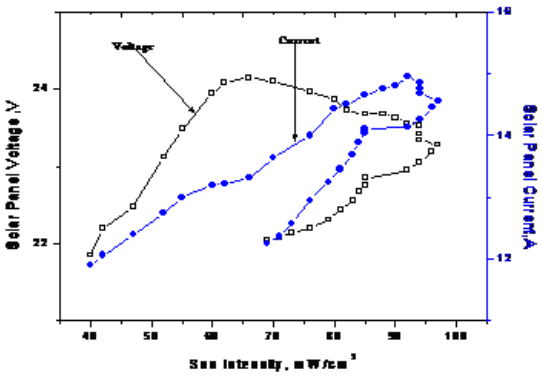

Figure-8. Solar Panel voltage current behaviour when a solar panel is connected to the battery through a switch.

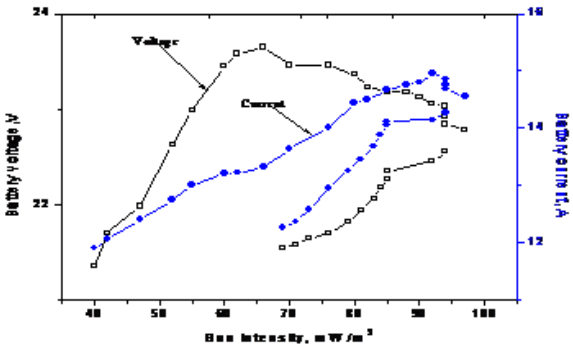

Figure-9. Battery voltage and current attributes when photo voltage panel directly connected through a switch.

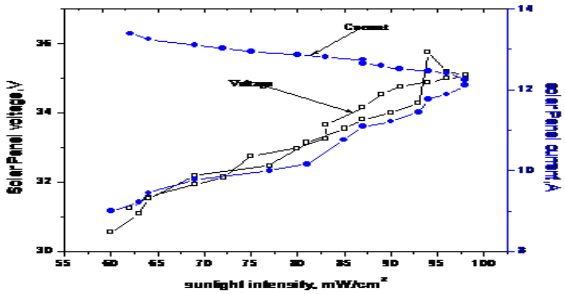

Figure-10. Solar panel 1 voltage and current attributed when panel 1 connected through conventional charger to the battery.

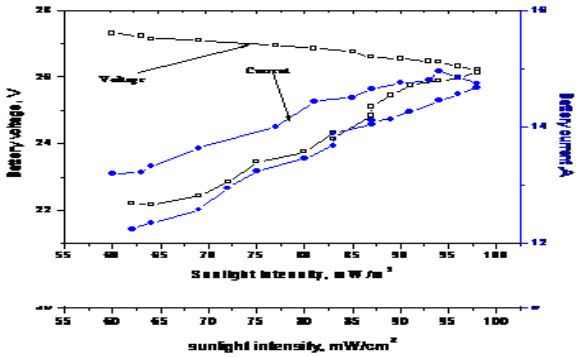

Figure-11. Battery voltage and battery current attributed when P-V panel connected through Conventional.

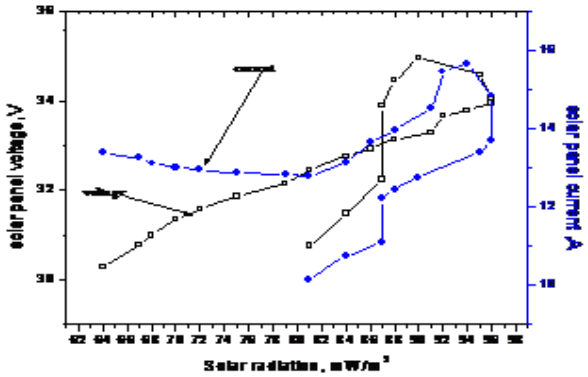

Figure-12. Solar panel voltage and current attributed when P-V panel is connected to the battery with MPPT (Maximum Power point Tracker) charge controller connected through conventional.

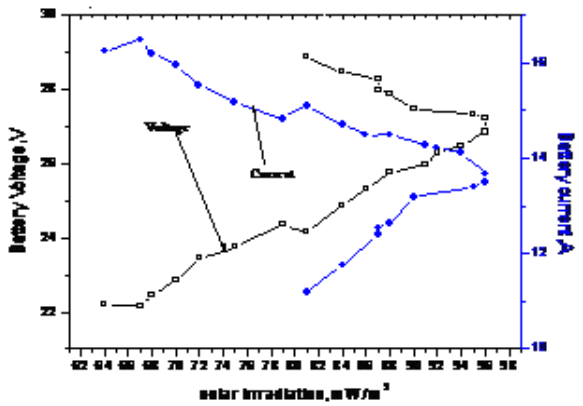

Figure-13. Battery voltage and current attributed when PV Panel is connected to the battery with MPPT (Maximum Power point Tracker) charge controller.

CONCLUSIONS

Our study yielded the following main results:

P-V attributes for a module obtained from a company .This yielded characteristics at 45 ^{0} C for several intensities. The same module is tested for its characteristics for four different temperatures. Again its

characteristics for five different shunt resistances and three different series resistances (form of equivalent circuit that is needed for a charger) are tested and these are the main things which are used to have the solar panel needed to charge the battery. Solar panel voltage current characteristics and battery voltage and current attributes for three different mode of charging viz.

a) When P-V panel is directly connected to Battery through a switch

b) When P-V panel is directly connected to conventional charger through a switch

c) When P-V panel is connected to battery through MPPT charger

It is found that the battery charger to a satisfactory extent when P-V panel is connected to battery through MPPT charger.

REFERENCES

[1] Armenta C. 2003. Prediction of battery behavior in SAPV applications. Renew Energy. 28(11): 1671-84.

[2] Salameh ZM, Cassacca MA, Lynch WA. 1992. A mathematical model for lead–acid batteries. IEEE Trans Energy. 7(1): 93-7.

[3] Copetti JB, Chenlo F, Lorenzo E. 1993. A general battery model for PVsystem simulation. Prog Photovoltaics Res Appl. 1: 283-92.

[4] Guasch D, Silvestre S. 2003. Dynamic battery model for photovoltaic applications. Prog hotovoltaics Res Appl. 11: 193-206.

[5] Pascoe PE, Anbuky AH. 2004. A VRLA battery simulation model. Energy Convers Manage. 45(7-8): 1015-41.

[6] Catherino HA, Burgel JF, *et al*. 1999. Modelling and simulation of lead–acid battery charging. J Power Sources. 80: 17-20.

[7] Piller S, Perrin M, Jossen A. 2001. Methods for state-of-charge determination and their applications. J Power Sources. 96(1): 113-20.

[8] Berndt D. 1994. Maintenance-free batteries. England: Wiley.

[9] Chaurey C, Deambi S. 1992. Battery storage for PV power systems: an overview. Renew Energy. 2(3): 227-35.

[10] Yang HX, Lu L, Zhou W. 2007. A novel optimization sizing model for hybrid solar–wind power generation system. Sol Energy. 81(1):76-84.

[11] Macomber HL, *et al.* 1981. Photovoltaic stand-alone systems: preliminary engineering design handbook. NASACR-165352.

[12] Mellit A, Benghanem M, Kalogirou SA. 2007. Modeling and simulating of a stand-alone photovoltaic system using an adaptive artificial neural network: proposition for a new sizing procedure. Renewable Ener. 32: 237-258.

[13] Shaahid SM, Elhadidy MA. 2003. Opportunities for utilization of standalone hybrid (photovoltaic - diesel -battery) power systems in hot climates. Renewable Ener. 28:1741-1753.

[14] Sukamongkol Y, Chungpaibulpatana S, Ongsakul W. 2002. Simulation model for predicting the performance of a solar photovoltaic system with alternating current loads. Renewable Ener. 27: 237-258.

[15] Zhou W, Yang H, Fang Z. 2007. A novel model for photovoltaic array performance prediction. Appl. Ener. 84: 1187-1198.