VOL. 11, NO. 20, OCTOBER 2016 ISSN 1819-6608
ARPN Journal of Engineering and Applied Sciences

www.arpnjournals.com

EFFECT OF ALCOHOL-GASOLINE BLENDS (ETHANOL) ON PERFORMANCE AND EMISSION OF SI ENGINE

Asiah Ab. Rahim[1] and Nik Rosli Abdullah[2]
[1]Faculty of Mechanical Engineering, Universiti Teknologi Mara, Bukit Besi Campus, Dungun, Terengganu, Malaysia
[2]Faculty of Mechanical Engineering, Universiti Teknologi Mara, Shah Alam, Selangor, Malaysia
E-Mail: asiahrahim@tganu.uitm.edu.my

ABSTRACT

The concern about the environmental pollution from incomplete combustion and depletion of fossil fuel has lead the interests of scholar to study about the reformulate of alternative fuel. This paper examines the effect of the alcohol-gasoline blended on the engine emission in consideration of the engine performance. Ethanol (alcohol) that contain different amount of concentration (E5 and E15) of oxygen is used. The test was carried out using 4-cylinder and 4 stroke gasoline engine under wide open throttle and variable speed ranging from 1000 to 4000 rpm. The alcohol had been blended with the gasoline with different amount of concentration (0%-15%) per 2L volume. The result shows that an increase of alcohol content will result in decreasing of carbon monoxide (CO) emissions due to the presence of oxygen. Furthermore, the presence of oxygen in alcohol resulted in complete combustion thus increase the emission of carbon dioxide (CO_2). The brake thermal efficiency increased by 0.61% and 2.96% by using E5 and E15 respectively compared with pure gasoline. Overall, E15 is proven to be the best blended compare with other blends as it is showing the most reduction in CO emission without sacrificing the engine performance.

Keywords: ethanol, BSFC, emission, engine performance, environmental pollution.

INTRODUCTION

The concern about the environmental pollution from incomplete combustion and depletion of fossil fuel has led the interests of scholar to study about the reformulate of alternative fuel. According to previous study, the used of fuel alternatives that containing oxygen (oxygenates) was very important as the additive can increase the performance and efficiency of the fuel [1].

Based on previous study, one of the best methods to improve the combustion behavior is by blending base fuel with additives [2-4]. Alcohol (ethanol)-gasoline blends can reduce air pollution and at the same time offers excellent performance of the engine compared to unblended petroleum fuel [5]. The effect of the ethanol gasoline blends on CO emissions for different engine speeds showed that when ethanol percentage increases, the CO concentration decreases [6-8]. Carbon content in the blended fuel also plays a major part on the emission of CO due to the lower carbon content.

In [9] concluded that ethanol had a higher octane number compared with gasoline. Therefore, it will allow the alcohol to have much higher compression ratios, and increased the thermal efficiency. However, a significant disadvantage of alcohol was they had lower energy content compare with gasoline [10]. Other than that, alcohol has lower calorific value compare with gasoline, and causing it to produce less power compared with gasoline.

The objective of this study is to investigate the effects of the blended fuel on the performance and emission on the spart ignition (SI) engine and to determine the best blended fuel ratio of alcohol-gasoline blends for performance and exhaust emission.

METHODOLOGY

The experiment was conducted by using an engine test bench with eddy current dynamometer as shown in Figure-1. The engine was run at the full load condition, constant torque and various speeds ranging from 2000 rpm to 4000 rpm in the step of 1000rpm. The detail of the engine specification is shown in Table-1.

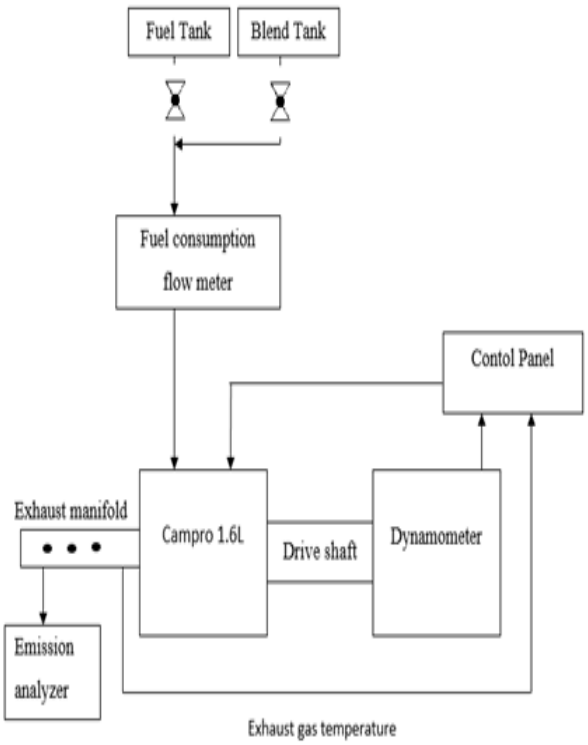

Figure-1. Schematic diagram of engine setup.

VOL. 11, NO. 20, OCTOBER 2016 ISSN 1819-6608
ARPN Journal of Engineering and Applied Sciences

www.arpnjournals.com

Table-1. Engine specification.

Engine Parameter	Value
Engine name	Proton Campro
Number of cylinder	4
Displacement volume	1596 cc
Bore	78mm
Stroke	84 mm
Compression ratio	10:1
Maximum output	78kW at 6000 rpm
Maximum torque	135 Nm at 4000 rpm

The alcohol (ethanol) had been blended with the gasoline with different amount of concentration per 2L volume. The concentration of alcohol that was used were ranging from 0%-15%. Pure gasoline was used to compare the effect of alcohol additives. The important parameters which are engine speeds was controlled during the test. Cadet V12 software is being integrated with the sensor was installed in the engine is used to control the speed, torque and load. AVL DiCom 4000 gas analyzer is used to measure the emissions of CO and CO_2.

RESULTS AND DISCUSSION

Brake Power

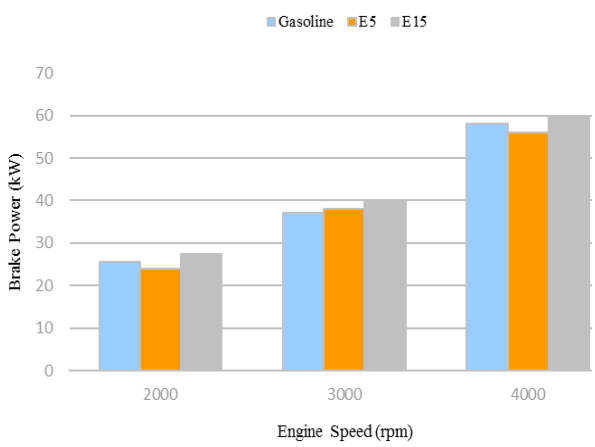

Figure-2. Brake power against engine speed (rpm) at full throttle.

Based on Figure-2, the brake power shows increasing pattern as the engine speed is increased. The result shows at the speed of 3000 rpm, E15 generates highest brake power compared with the gasoline which is 40 kW and 38 kW respectively. This is due to the higher latent heat of vaporization of alcohol compared with gasoline.

Ethanol is known as partially oxidized; therefore ethanol-gasoline blends can provide more combustion in the engine [11]. This is due to the increasing of ethanol concentration in the blends that lead to the decreasing of the stoichiometric air fuel ratio of the blends, thus lead to more lean combustion. As a result, E15 shows a highest increase in brake power compare with the other blends.

Brake specific fuel consumption (BSFC)

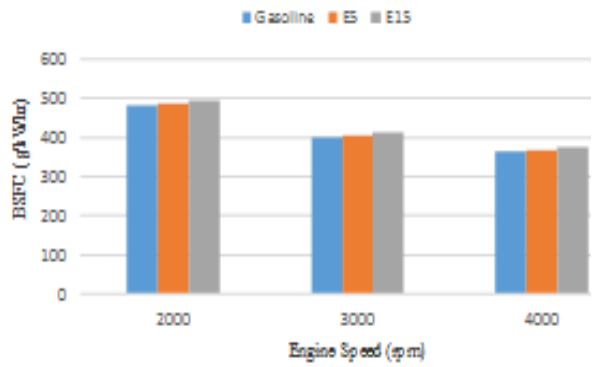

Figure-3. Brake specific fuel consumption against engine speed (rpm) at full throttle.

Figure-3 shows that BSFC is decreasing as the engine speed increase. In overall, BSFC increased 0.61% and 2.96% since using E5 and E15 respectively than that of using gasoline.

Based on Figure-3, increasing of alcohol concentration will lead to the increasing of BSFC. This is because the lower calorific value/lower heating value of alcohol compared with gasoline. Therefore, more fuel is needed to have the same wheel power as gasoline [12].

BSFC is inversely proportional to the brake power; hence when the speed increased, power will be increased, therefore BSFC was decreasing with the increased of the speed. Overall, E5 shows the lowest BSFC compared with other blends and pure gasoline.

CO emission

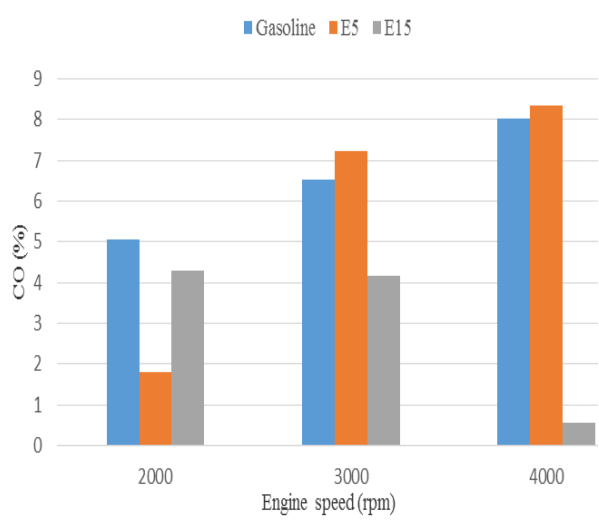

Figure-4. The CO emission against engine speed (rpm) at full throttle.

Based on Figure-4, the exhaust emission increased simultaneously as the engine speed is increased. At the 4000 rpm, E15 shows the lowest emission of 0.57%

meanwhile E5 emits slightly higher emission of CO compare to gasoline which is 8.35% and 8.01% respectively. The enrichment of oxygen owing to the ethanol, where it increases the oxygen content of the blends and promotes further oxidation of CO during the engine exhaust. The reduction of the CO also due to lower carbon in the ethanol (C_2H_5OH) compared with gasoline (C_8H_{18}).

However, the overall exhaust emission for the alcohol blends showing a decrease pattern compare with the gasoline. This is due to the increased of the air fuel ratio (AFR) of the blends. The engine tends to operate in leaner conditions, closer to stoichiometric burning when the air excess coefficient (AEC) of the blends approaches to 1. The increasing of alcohol concentration will increase the AEC and actual AFR while decreasing the stoichiometric AFR of the blends. Hence, the leaner conditions will cause a complete combustion thus decreasing the emission of CO.

CO_2 emission

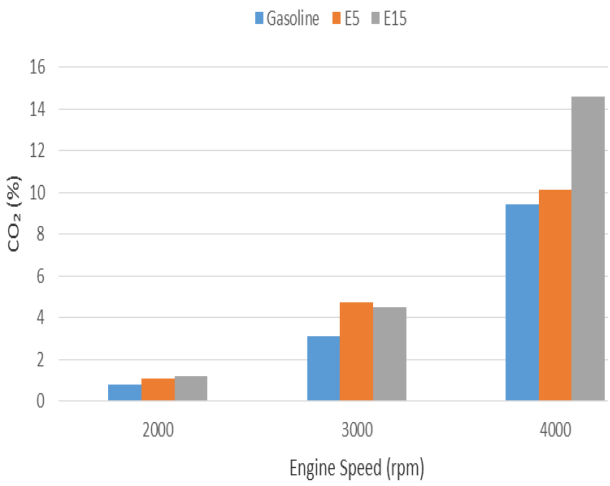

Figure-5. The CO_2 emission against engine speed (rpm) at full throttle.

Figure-5 illustrate emission operating with different concentration of alcohol at different engine speeds from 2000 rpm to 4000 rpm. It is observed that the emissions of CO_2 increase as engine speed increase. The emission of CO_2 increased 22.74% and 33.39% since using E5 and E15 respectively than that of using gasoline.

Emission of CO_2 is a reverse behavior of the CO emission. It is caused by the complete combustion of the fuel. Increasing of oxygen content in the ethanol-gasoline blends will promote more oxidation for combustion, thus improved the combustion efficiency [13]. Therefore, the higher oxygen content of alcohol will increase the emission of CO_2.

Moreover, E15 produced higher CO_2 compare with the others blends. This is due to the lower stoichiometric air-fuel-ratio of the blend that leads to leaner condition. The leaner condition is achieved by increasing the alcohol concentration. The leaner condition will give more effective combustion that leads to higher CO_2 emission.

CONCLUSIONS

The overall results show that the engine operating with E15 improved the exhaust gas emission without sacrificing engine performance. The result of brake power has been improved when E15 blend is used. The increases of the brake power mainly due to the higher latent heat of vaporization of ethanol (840kJ/kg) which provide air-fuel-charge cooling thus increase the density of the charge. BSFC increased with the increased of alcohol concentration due to the low calorific value or lower heating value of alcohol compared to gasoline, which are 0.61% and 2.96% for E5 and E15 respectively.

All alcohol gasoline blends emitted lower CO emission than that of gasoline due to the enrichment of oxygen content in ethanol promote further oxidation of CO. Other than that, factors that contribute to the lower CO lever are lower carbon in ethanol compared to gasoline and also due to the increase of AFR in the blends. CO decreased by 16.45% and 48.145% for E5 and E15 respectively. Meanwhile, CO^2 emission increased 22.74% and 33.39% since using E5 and E15 respectively than that of using gasoline. In overall, this proved that alcohol-gasoline blends increase the combustion efficiency inside the cylinder.

Therefore, it can be concluded that the additional of alcohol (ethanol) to gasoline can act as the catalyst to improve engine performance and control the exhaust gas emission. As the recommendation, ethanol-gasoline blends can be further improved with additions of higher alcohol fuels such as isopropanol and iso-butanol.

ACKNOWLEDGMENTS

The author would like to thank to Muhammad Imran Dahalan for his support in experimental works. The research work was supported by the Research Acculturation Grant Scheme (RAGS) from the Malaysia Higher Education Department and Universiti Teknologi MARA (UiTM) (Grant No. 600-RMI/RAGS 5/3 (222/2014)).

REFERENCES

[1] S. Iliev. 2015. A comparison of ethanol and methanol blending with gasoline using a 1-D engine model. Procedia Engineering. 100: 1013-1022.

[2] International Energy Agency. 2015. Key world energy statistics. https://www.iea.org/publications/freepublications/publication/KeyWorld_Statistics_2015.pdf.

[3] BP. 2015. BP statistical review of world energy June 2015. https://www.bp.com/content/dam/bp/pdf/energy-

economics/statistical-review-2015/bp-statistical-review-of-world-energy-2015-full-report.pdf.

[4] Shell. 2011. Shell energy scenarios to 2050: Signals and signposts. http://www.euromot.org/download/5438379ade278fdcb4d094cd.

[5] M. Pugazhvadivu. 2009. Studies on the effect of ethanol addition to biodiesel: Performance and emissions of a diesel engine. Indian Journal of Science and Technology. 2(11): 23-26.

[6] S. B. Shayan, S. M. Seyedpour, F. Ommi, S. H. Moosavy and M. Alizadeh. 2011. Impact of methanol-gasoline fuel blends on the performance and exhaust emissions of a SI Engine. International Journal of Automotive Engineering. 1(3): 219-227.

[7] H. S. Farkade and A. P. Pathre. 2012. Experimental investigation of methanol, ethanol and butanol blends with gasoline on SI engine. International Journal of Emerging Technology and Advanced Engineering. 2(4): 205-215.

[8] W. D. Hsieh, R. H. Chen, T. L. Wu and T. H. Lin. 2002. Engine performance and pollutant emission of an SI engine using ethanol-gasoline blended fuels. Atmospheric Environment. 36(3): 403-410.

[9] R. D. Silva, R. Cataluna, E. W. de Menezes, D. Samios and C. M. Piatnicki. 2005. Effect of additives on the antiknock properties and Reid vapor pressure of gasoline. Fuel. 84(7): 951-959.

[10] M. Eyidogan, A. N. Ozsezen, M. Canakci and A. Turkcan. 2010. Impact of alcohol-gasoline fuel blends on the performance and combustion characteristics of an SI engine. Fuel. 89(10): 2713-2720.

[11] A. Pikūnas, S. Pukalskas and J. Grabys. 2003. Influence of composition of gasoline-ethanol blends on parameters of internal combustion engines. Journal of KONES Internal Combustion Engines. 10(3-4): 205-211.

[12] A. M. Pourkhesalian, A. H. Shamekhi and F. Salimi. 2010. Alternative fuel and gasoline in an SI engine: A comparative study of performance and emissions characteristics. Fuel. 89(5): 1056-1063.

[13] M. K. Balki, C. Sayin and M. Canakci. 2014. The effect of different alcohol fuels on the performance, emission and combustion characteristics of a gasoline engine. Fuel. 115: 901-906.