VOL. 11, NO. 20, OCTOBER 2016 ISSN 1819-6608
ARPN Journal of Engineering and Applied Sciences

www.arpnjournals.com

DYNAMIC SIMULATION OF COMBINED EXTREMUM-SEEKING CONTROL SYSTEM FOR GRINDING-MIXING UNIT AUTOMATIC VIBRATION SUPPRESSION

Dmitry Alexandrovich Bushuev, Vasiliy Grigorievich Rubanov and Dmitry Valeryevich Velichko
Belgorod State Technological University named after V.G. Shukhov, Belgorod, Kostyukova, Russia

ABSTRACT

The study describes the dynamic simulation of the combined extremum-seeking control system of automatic vibration suppression of the centrifugal grinding-mixing unit, including extremum-seeking controller and program system with training. A virtual prototype of the unit is presented. It is shown that the virtual prototype has a similar vibrational frequency spectrum of the support column and the trajectory of movement of grinding bodies of the centrifugal grinding-mixing unit experimental-industrial sample. The mathematical description of the non-linear plant is presented in the form of Wiener by fitting the data obtained by simulation of the virtual prototype work. The functional block diagram, algorithm and model of the extremum-seeking control combined system in MATLAB/Simulink software where the plant is given in the form of a polynomial second-degree static map, with drifting parameters and dynamic part are presented. The results of simulation the proposed combined extremum-seeking control system for automatic vibration suppression of centrifugal grinding-mixing unit are shown.

Keywords: vibration, automatic suppression, grinding-mixing unit, extremum-seeking controller, virtual prototype, combined system.

INTRODUCTION

Low reliability primarily due to the high intensity of the dynamic processes occurring in centrifugal grinding-mixing equipment is the main factor of its industrial using restriction. One of these units is a three-chamber grinding-mixing unit (CGMU) designed at the department of Theory of Machines and Mechanisms of Belgorod State Technological University n. a. V.G. Shukhov. Due to the kinematic scheme of slider-crank mechanism top working chamber of CGMU performs the translational motion, the average – plane-parallel along an elliptical path, and bottom – rotational [1]. Thus, a selective dynamic impact on the mill charge is ensured and generally higher specific capacity compared with ball and vibration mills is reached [2].

In the original design of the unit is used a method for partially static balancing of slider-crank mechanism by counterweights attached to the links. As is well-known, this method does not provide forces of inertia and their torques full balancing [3]. And beyond that, the optimal position of counterweights, corresponding to the minimum vibration, drifts [4], as in the grinding process takes place uncontrollable changing in grinding chamber load, due to the movement of the material (which is especially customary for batch mode of CGMU). Also it affects changing of the unit modes, grinding media and lining loss. As a result of this operational imbalance of the rotating system changes, this leads to increase in negative oscillations of parts and assemblies of the unit and reducing reliability due to growth in intensity of fatigue effects.

To accommodate these features of the unit at the Department of Technical Cybernetics (also BSTU n. a. V.G. Shukhov) were developed an automatic vibration suppression control systems in which used actuators for automatically move of counterweights and changing system imbalance according to the information received from the vibration sensor [5, 6]. These actuators can reposition counterweight using external energy supplied to be placed on an eccentric shaft DC motors (Figure-1) [5], or by existing power of eccentric shaft rotation by means of a special device based on a modular basis of the differential mechanism and the electromagnetic brake clutches [6].

The plant of such mechatronic systems is a process of balancing with the output variables in the form of units and parts vibration displacement RMS and the input in the form of counterweights position [7]. As the static map curves of the control object have unimodal extremum pattern which is exposed to uncontrollable disturbances, then for control of such plants are usually designed extremum-seeking control systems [8-9]. Depending on the way of finding the extremum distinguishes [10]:

a) discrete (stepper) extremum-seeking control systems that track the sign of the plant output signal increment [11]. The disadvantage of such systems when they used for automatic balancing is the discrete nature of the work, as in the control object there is a continuous dynamic relationship between input and output [12];

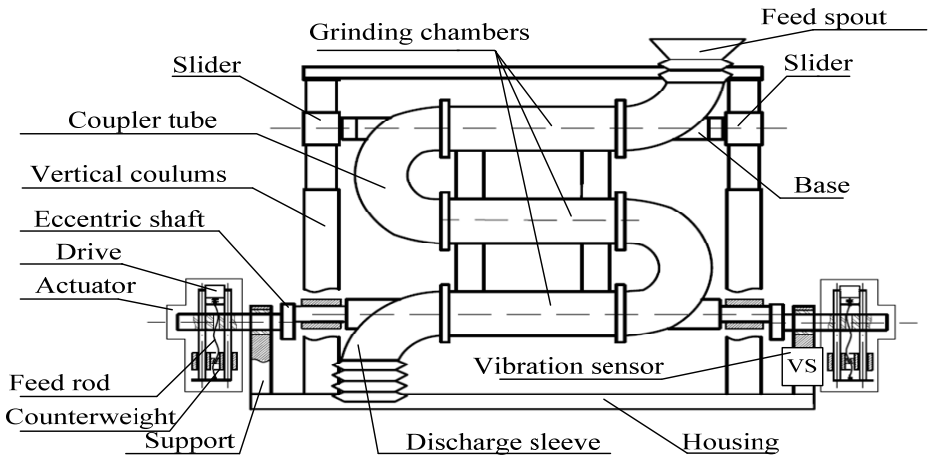

Figure-1. Centrifugal grinding-mixing unit with automatic balancing.

b) gradient extremum-seeking control systems, which used information about gradient of quality function (partial derivative) to organize the motion. For the continuous gradient estimation can be used [11-13]: the division of derivatives, method of synchronous detection, or special filter of partial derivative evaluation [14] and others. A common drawback of such systems is the necessity to measure the input signal, which provides for adding the counterweight sensor. Measurement accuracy of position sensors is low due to the necessity to transfer information from the rotating parts to a fixed base. When using method of synchronous detecting [13] there is a complexity of practical implementation of such system in view of need of the organization of the additional trial high frequency test signal applied to the plant input;

c) extremum-seeking control systems with extremum memorizing which is responsive to the difference between the extremum (minimum or maximum) value of output achieved in recent times and the current value of the plant output [12].

Thus, using of search algorithms of extremum-seeking control systems under the action of monotonic disturbances reduces the accuracy of extremum maintaining, the additional energy losses and decreasing in reliability due to the necessity for the implementation of the search motion and occurring due to this "search and yaw loss" [15].

This article describes the dynamic simulation of the method of reducing losses in the search for minimum vibration, the number of actuators switching and yaw exception based on the use of a combined extremum-seeking control system, including the extremum-seeking controller and programme system with training.

Methods and models

For getting the plant model a virtual prototype of the experimental-industrial sample of CGMU (Figure-2) was built in ADAMS software with Machinery plug-in.

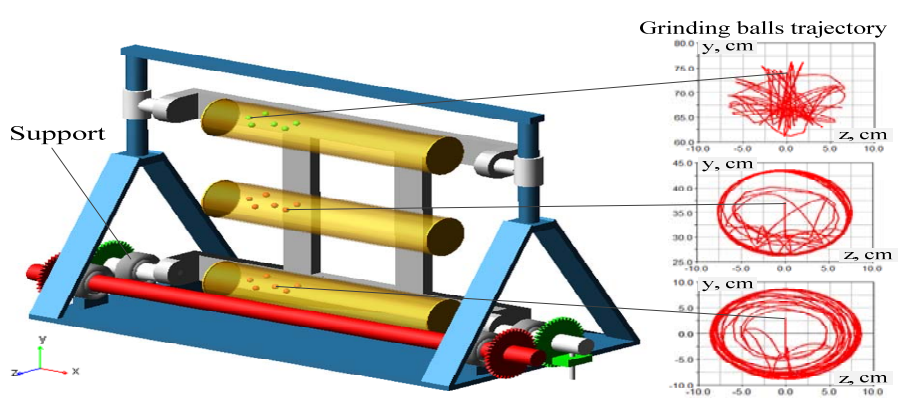

Figure-2. Virtual prototype of centrifugal grinding-mixing unit (*a*) and trajectory of grinding balls movement (*b*).

VOL. 11, NO. 20, OCTOBER 2016 ISSN 1819-6608
ARPN Journal of Engineering and Applied Sciences

www.arpnjournals.com

Description of parts and subassemblies of virtual prototype are presented in Table-1.

Table-1. Description of parts and subassemblies of virtual prototype.

Item	Mass, kg	Axial moment of inertia, kg·cm^2		
		Ixx	*Iyy*	*Izz*
Grinding chambers, *A*, *B*, *C*	18,3	$1{,}38\cdot10^4$	$1{,}38\cdot10^4$	1014
Counterweight, *D*	7,5	79,6	63,8	26,3
Eccentric shaft	18,6	$1\cdot10^5$	$1\cdot10^5$	142
Additional shaft	33,6	$9\cdot10^4$	$9\cdot10^4$	206
Base	41,6	$7{,}38\cdot10^4$	$3{,}87\cdot10^4$	$3{,}55\cdot10^4$
Housing	277	$1\cdot10^6$	$8{,}75\cdot10^5$	$4\cdot10^5$
Slider	4,26	129	117	47

The calculation results in the ADAMS software shows that the trajectory of the grinding media (Figure-2) in the grinding chamber coincides with that obtained in [1], and the vibration displacement frequency spectrum of the virtual prototype CGMU support column is similar in terms of the first harmonic and frequencies of the others with the same spectrum obtained through experiments with an experimental-industrial sample at an appropriate grinding media (Figure-3).

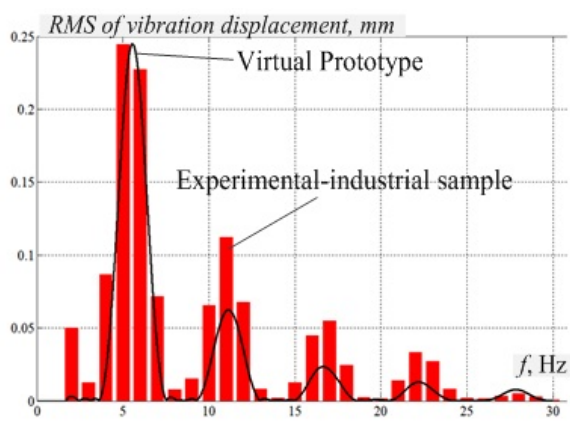

Figure-3. Vibration displacement frequency spectrums.

The mathematical model of a virtual prototype with actuator in a first approximation has been presented in the form of a Wiener model, where dynamic part is located before the non-linear element. Identification of the plant parameters was carried out according to the following procedure:

- Take the static maps of the plant when loading mill charge having 20 kg weighing, alternately in each grinding chamber from the top, starting from top, so, first loading of the upper chamber Δm_{uc} = 20 kg and loading of middle and down chamber $\Delta m_{mc} = \Delta m_{dc}$=0 (Table-2);
- Select the linear section of static map;
- Take step response of the plant in the linear section by applying Heaviside step function on the actuator with a known mathematical description in order to the dynamic part plant identification.

As a result of the approximation by the least square method were found coefficients of static maps (Table-2) given as:

$$S = f\left(h_D, k_1, k_2\right) = \begin{cases} k_1 \cdot \left(h_D - h_{D0}\right)^2 + S_0, & h_D < h_{D0}, \\ k_2 \cdot \left(h_D - h_{D0}\right)^2 + S_0, & h_D > h_{D0}, \end{cases}$$

- where S – RMS of the support vibration displacement, h_D – counterweights position, h_{D0}, S_0 – coordinates of the function minimum, k_1, k_2 – required coefficients which have been found during the minimization process.

Table-2. Plant static map parameters.

Grinding chambers load	h_{D0}, cm	S_0, mm	k_1	k_2
without loading	9,418	0,2539	0,0178	0,0132
Δm_{uc} = 20 kg, Δm_{mc} = 0 kg, Δm_{dc} = 0 kg	9,913	0,3868	0,0115	0,0113
Δm_{uc} = 0 kg, Δm_{mc}= 20 kg, Δm_{dc} = 0 kg	10,498	0,3653	0,0123	0,0120
Δm_{uc} = 0 kg, Δm_{mc} = 0 kg, Δm_{dc} = 20 kg	11,933	0,2918	0,0142	0,0148

During the dynamic part identification by using an adaptive Gauss-Newton method [16] with the System Identification Toolbox of MATLAB software was determined that, accurate to 98.28% dynamic part can be

VOL. 11, NO. 20, OCTOBER 2016 ISSN 1819-6608
ARPN Journal of Engineering and Applied Sciences

www.arpnjournals.com

approximated by a first-order transfer function with transport delay:

$$W_{DP}(s) = \frac{e^{-\tau s}}{(Ts+1)} = \frac{e^{-0,147s}}{(0,01s+1)},$$

where s – Laplace operator, T – object time constant, τ – transport delay.

Control system description

Approach of using combined extremum-seeking control system is based on the following properties of the CGMU static map drift observed during the cyclic loading of the mill charge:

- the initial position of the static map prior to feed of the material and final after discharge is almost identical for all cycles of loading;
- movement through the grinding chambers of equal amount of material with comparable physical and mechanical properties from cycle to cycle, usually cause an identical drift of the static map.

Taken into account these features, the control system (functional diagram is shown in Figure-4) on the first cycle of material feeding which is determined by the appropriate signal of the SCADA system, identifies the drift of the static map by providing training search by using extremum memorizing method at a constant counterweight motion speed and reverse zone defined the necessary immunity. The trajectory of the drift (dotted curve) at this motion is the sliding average value of the integrated control actions applied to the actuators. In the process of teaching it is memorizing the current values of vibration (in the memory block M1) and the integrated value of control actions (in the memory M2), which after the end of the grinding cycle (which is defined in the mass comparator CM with equal masses of feed and discharged material, measured by feed sensor FS and discharge sensor DS, respectively) are averaged and stored their median values instead of using the current by using drift identification block IDB.

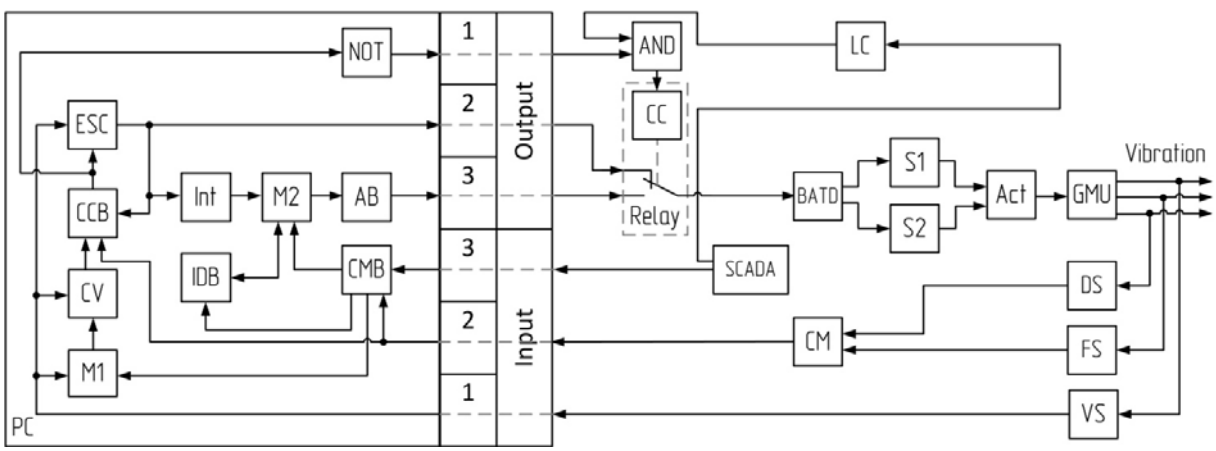

Figure-4. Function block diagram of the system.

The programme motion along the drift path switches in further cycles after the first cycle of feeding what causes movement to the vibration extremum without the necessity for performing search signals and yaw loss in the case of identical drift. At that, constantly compares the current level of vibration determined by the vibration sensor VS with the same value stored in the first cycle. If that difference exceeds by the installed dead zone defined by the condition of allowable error deviation then a system for searching the extremum of vibration switches using the comparator vibration CV on three exploratory movements with the last movement, equal in time, half of the interval of the previous movement. It helps to reduce the tracking error of the extremum accumulated as a result of programmed motion.

The control algorithm of the combined system uploads to the real-time programmable controller PC. It implements two control channels. The first channel contains extremum-seeking controller ESC, which, depending on the state of the controller control block CCB can operate in continuous search mode, or search by the three movements with the last movement, equal to the time previous. The second channel transforms integrated by the integrator Int control action pulses in the approximation block AB to the setting action of direction and velocity for actuators motion Act (by the using the block of amplifier-transducing devices BATD and servos S1, S2). Control memory block CMB defines modes for blocks M1 and M2. Switching of channels performs by the relay element "relay" depending on the inverted signal CCB and logic circuit LC state which comes with a signal of the start of the cycle from the corresponding SCADA system.

Dynamic simulation model of the proposed system

The dynamic simulation of the combined system was performed in MATLAB\Simulink software. General view of the simulation model of the system is shown in

Figure-5. The plant is defined as a subroutine "GMU", which structure is shown in Figure-6, where for setting the drift variables h_{D0}, S_0, k_1, k_2 used S-functions "hdDrift", "SDrift" etc. Subroutine "AVG" performs functions of the memory block M2 and identification drift block IDB, what provides smoothing using weighted local quadratic regression method "loess" in MATLAB software. Block "ApproxVel" defines setting action of the speed which is supplied to the servos S1 and S2. Extremum-seeking controller ESC is made by means of two sub-programs in the form of S-functions: "Algoritm2" defines training mode of the search on the first cycle of loading, "Algoritm3" serves as the extremum-seeking controller ESC on the remaining cycles and memory block M1 in the training mode. Subroutines "Subsystem1" and "Subsystem" used for control of the different modes selection. Relay element is implemented using a block "Relay".

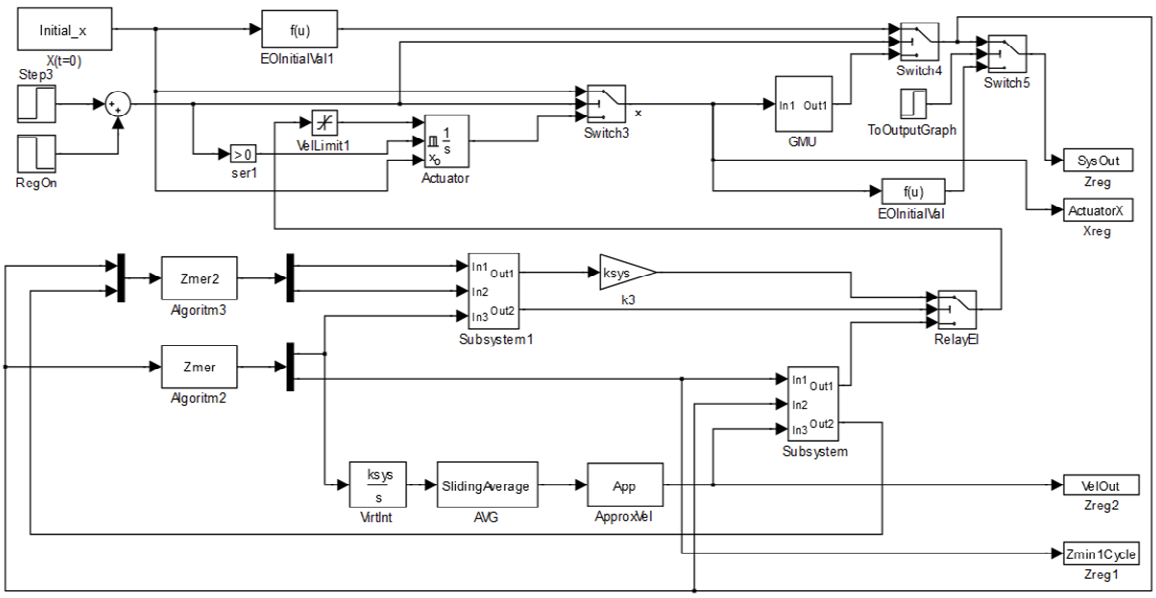

Figure-5. MATLAB/Simulink dynamic system simulation model.

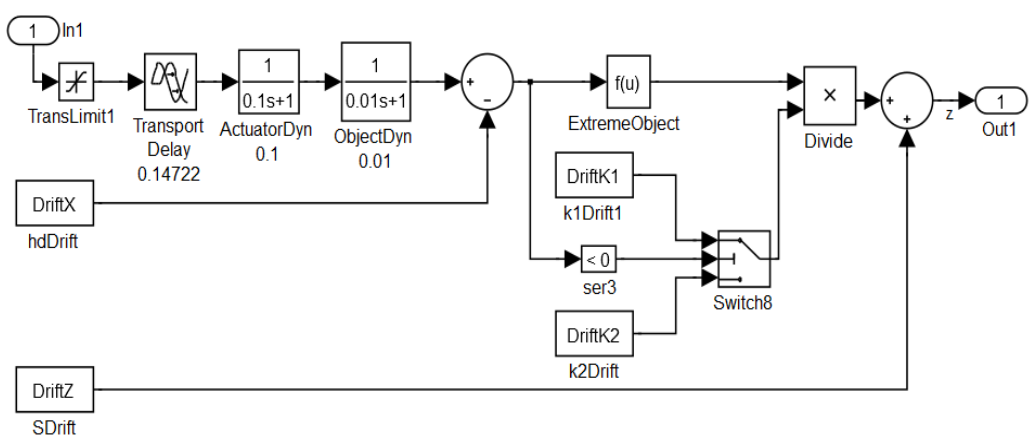

Figure-6. MATLAB/Simulink plant model.

The results of computer dynamic simulation of the combined system on the first cycle of loading are shown in Figure-7. Changing of the counterweights positions h_D is shown in Figure-7,*a* and changing of the CGMU support vibration displacement RMS *S* is shown in Figure-7,*b*.

Extremum-seeking controller carries out a continuous search with a constant velocity of the actuator motion and the value of the dead zone equals to S_n = 10 mm. The results of simulation on the second cycle of loading are shown in Figure-8. Extremum-seeking controller is switched on for three search motion at the beginning of the second cycle (t = 400 s) and about the end of the loading to the upper grinding chamber (t = 456 s) as an output RMS value of vibration displacement exceeds a value corresponding to the first cycle of loading

with allowances made for given dead zone equals to 5 microns.

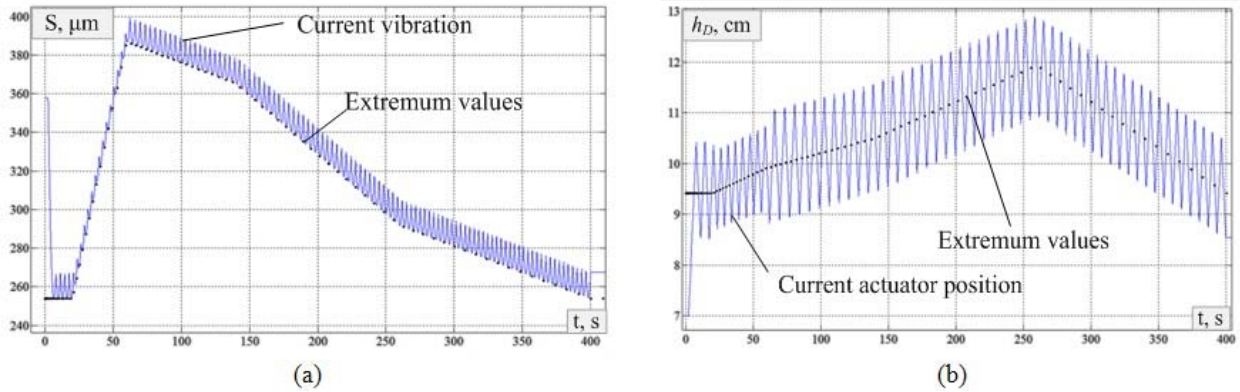

Figure-7. Results of system simulation of the grinding first cycle.

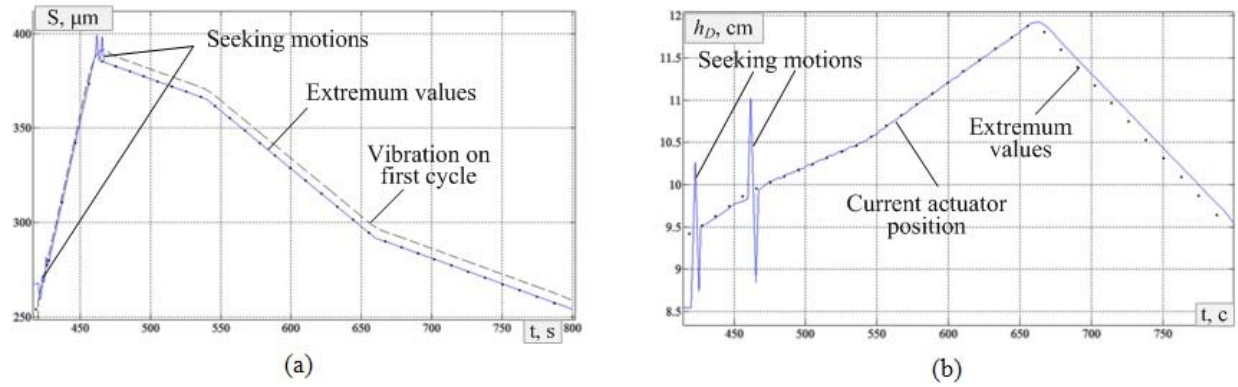

Figure-8. Results of system simulation of the grinding second cycle.

SUMMARY

According to the results of dynamic simulation, using of combined extremum-seeking control system for automatic vibration suppression of the grinding-mixing unit virtual prototype, starting from the second cycle of grinding, allows to reduce the number of search motions and switching actuators. At that, movement of the counterweights is performed along a trajectory of the static map drift obtained in the first loading cycle. Going beyond the permissible dead zone determined on the first cycle, results in the switching on an extremum-seeking controller on three exploratory movements with the last movement, equal in time, half of the interval of the previous movement, thereby the error, accumulated as a result of programmed motion is compensated.

CONCLUSIONS

In the worst case, combined extremum-seeking control system will constantly operate in search mode. However, as distinct from the search method by extremum memorizing, the efficiency of which for the automatic vibration suppression was shown in [7], the system will only be switched when exceeding the value corresponding to the first cycle, i.e. search is carried out without yaw. Application of the combined system also reduces the loss search.

If the mass of the feed charge or the characteristics of the milling material is changed or when extremum-seeking controller frequent switching on in program mode then SCADA system may perform new training cycle. In the case of changing the weight or the type of material the trajectory of drift is stored in the programmable controller and can be used on the next startup of the same type of material.

ACKNOWLEDGEMENTS

Research is carried out with the financial support of the Russian Foundation of Basic Research and the Government of the Belgorod region within the project # 14-41-08016 "r_ofi_m" "Development of intelligent control systems for complex technological processes on the basis of advising systems with computer vision".

REFERENCES

[1] Sevostyanov, V.S., V.I. Uralskiy, and E.V. Sinitsa, 2005. Centrobeznyi pomolno-smesitelnyi agregat [Centrifugal grinding-mixing unit]. Bulletin of BSTU named after V.G. Shukhov, 11: 215-217.

[2] Glagolev, S.N., V.S. Sevostyanov, T.N. Ilina and V.I. Uralskiy, 2011 Production modules for combined reprocessing of technogenic materials. Chemical and Petroleum Engineering, 46 (09-10): 556-559.

[3] Bushuev, D.A., N.D. Vorobyev and V.G. Rubanov, 2014. Analiz dinamicheskih nagruzok v podshipnikah pomolno-smesitelnogo agregata kak objekta avtomatizacii [Analyses of dynamic bearing loads of grinding mixing unit as an automation object]. Bulletin of BSTU named after V.G. Shukhov, 2: 143-148.

[4] Bushuev, D. A., V.G. Rubanov and N.D. Vorobyov, 2014. Automatic Balancing Simulation of the Centrifugal Grinding-Mixing Unit. Research Journal of Applied Sciences, 9: 1064-1072.

[5] Rubanov, V.G., V.S. Sevostyanov, V.I. Uralskiy, A.A. Stativko, D.A. Bushuev and S.A. Stativko, 2012. Grinding-mixing unit with automatic balancing. Patent Application RU 114875

[6] Glagolev, S.N., V.G. Rubanov, V.S. Sevostyanov, V.I. Uralskiy, A.A. Stativko, S.A. Stativko and D.A. Bushuev, 2014. Grinding-mixing unit with automatic balancing. Patent RU 2494813.

[7] Bushuev, D.A. and V.G. Rubanov, 2014 Modelirovaniye dinamiki ekstremal'noy sistemy avtomaticheskoy balansirovki tsentrobezhnogo pomol'no-smesitel'nogo agregata [Dynamic simulation of extremum-seeking control system of centrifugal grinding-mixing unit with automatic balancing]. Systems and Devices. Control, Diagnosing, 11: 29-35.

[8] Zhang, Ch. and R. Ordóñez, 2012. Advances in Industrial Control. Extremum-Seeking Control and Applications. USA, Springer, pp: 222

[9] Krstic, M., 2000. Performance improvement and limitations in extremum seeking control. Systems & Control Letters, 5: 313–326.

[10] Frantsuzova, G.A., 2008. Dvukhkonturnyye sistemy ekstremal'nogo regulirovaniya s formirovaniyem zadannoy dinamiki [Two-contour extremum-seeking control systems with the formation of a given dynamics]. Mechatronics. Automation. Control, 5: 7-11

[11] Kasakevich, V.V. and A.B. Rodov, 1977. Sistemy avtomaticheskoy optimizatsii [Automatic optimization control systems]. Moscow. Energia, pp: 288

[12] Rastrigin, L.A., 1974. Sistemy ekstremal'nogo regulirovaniya [Extremum-seeking control systems]. Moscow. Nauka, pp: 632

[13] Ariyur, K. B. and M. Krstić, 2003. Real-Time Optimization by Extremum-Seeking Control. USA, John Wiley & Sons Inc., pp: 230

[14] Vostrikov, A.S. and V.D. Yurkevich, 1993. Design of control systems by means of localisation method. Preprints of 12th EFAC World Congress, 8: 47-50.

[15] Tyukin, I.Y. and V.A.Terekhov, 2014. Adaptatsiya v nelineynykh dinamicheskikh sist emaki [Adaptation in nonlinear dynamical systems] Moscow. LKI., pp: 384

[16] Yamamoto, T., 2000. Historical developments in convergence analysis for Newton's and Newton-like methods. ELSEVIER Journal of Computational and Applied Mathematics, 124: 1-23.