VOL. 11, NO. 20, OCTOBER 2016 ISSN 1819-6608
ARPN Journal of Engineering and Applied Sciences

www.arpnjournals.com

# COMPUTER SIMULATION OF MOVEMENTS OF THE HEXAPOD ROBOT FOR 3D PRINTING OF BUILDING PRODUCTS

Larisa Alexandrovna Rybak, Dmitry Ivanovich Malyshev, Lusine Hornikova Virabyan and Galina Valeryevna Bocharnikova
Belgorod State Technological University named after V.G. Shukhov, Russia, Belgorod, Kostyukova, Russia

**ABSTRACT**

The article considers the construction of a mathematical model of the dynamics of the mechanism with parallel kinematics by the example of hexapod, and the use of simulation based with 3D-model. When constructing a mathematical model of the dynamics equations of motion of the platform is written in the form of Lagrange equations. Checking the correctness of the model implemented in MatLab package using SimMechanic modules. During the simulation obtained graphs of position coordinates of the center of the platform from time to time and hexapods rods positioning errors. We also consider the problem of modeling the movements performed by the robot hexapod for the implementation of additive technologies. They assume layered volume 3D-press products or the production of coatings in construction. Synthesized algorithms for the realization of reciprocating and rotational movements of the output link.

**Keywords:** algorithm, robot-hexapod, modeling, 3D printing, controller, program module.

## INTRODUCTION

Due to increased requirements for quality processing of work surfaces in engineering now increasingly used are mechanisms with parallel kinematics, which perform the final machining of critical parts with complex configuration [1-3]. Equipment with parallel kinematics based on the application of multi-core and multi-flexible bar mechanism that allows the same mechanisms to carry out transport operations capture procurement, installation details and technological processing operations, and built a high-speed, high-torque drives and computer technology can not only manage technological displacement mechanism, and to compensate for its shortcomings. The mechanisms with parallel structure include tripods, tetrapods, hexapod etc [4].

Consider the mechanism with parallel kinematics - hexapod (Figure-1).

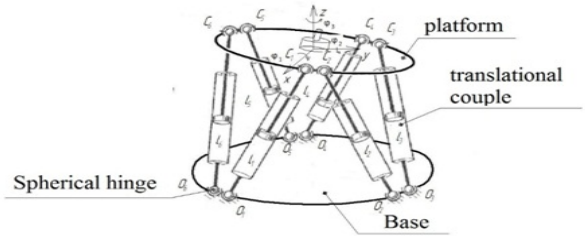


**Figure-1.** The scheme of hexapod.

## BUILDING A SIMULATION MODEL OF HEXAPOD

A distinctive feature of such mechanisms is the ability to perceive and transmit load like space farms and provide six degrees of freedom of the output link (platform) in combination with its high-precision positioning relative to the base [3]. The platform and the base are interconnected by six rods, each of which is a prismatic pair. The rod is connected to the base and platform by spherical joints and is limited against rotation relative to the longitudinal axis [5, 6].

Checking the correctness of the model was implemented in MatLab package with modules SimMechanic [7]. Hexapod model presented in Figure-2. Example of visualization of motion mechanism is depicted in Figure-2.

Testing of the model hexapod executed with changing the length of one of the rod on the harmonic law $L = 4 + \sin(0.2\pi t)$ - Figure-3 [8].

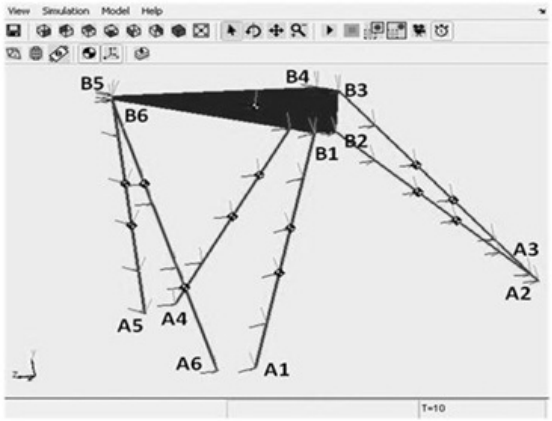


**Figure-2.** Visualization of motion.

VOL. 11, NO. 20, OCTOBER 2016 ISSN 1819-6608
ARPN Journal of Engineering and Applied Sciences

www.arpnjournals.com

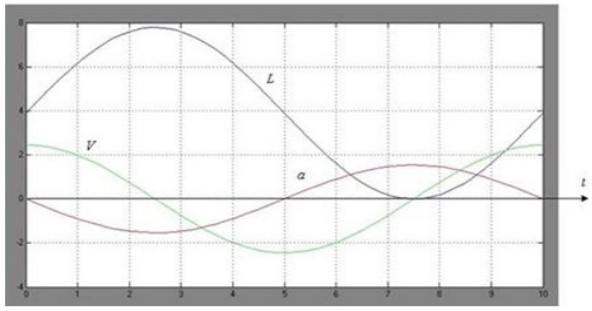


**Figure-3.** Result of modeling. *L*- rod moving, *V* – speed of rod, *a* – axeleration.

For the synthesis and mathematical modeling of the parallel kinematics manipulator was built 3D-model of the manipulator in the software package Unigraphics NX (Figure-3). The capabilities of the software system allows to import, using SimMechanics CAD translator, built 3D-model of the manipulator in the program package MATLAB. In turn, the program package MATLAB execute mathematical simulation of the robot arm (Figure-4). From the model given data on position and velocity changes of the length of the legs.

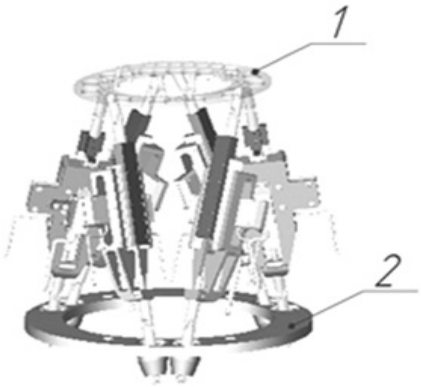


**Figure-4.** 3D- model robot-hexapod in the software package Unigraphics NX.

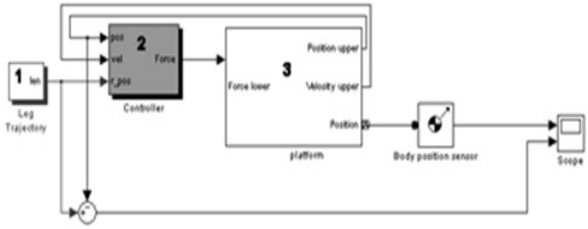


**Figure-5.** Model of parallel kinematics manipulator in program package MATLAB.

Blocks 1 are responsible for the conversion of reference obtained in the form of coordinates and angles of the upper platform, changes in length of the legs. Process diagram is shown in Figure-6. The rotation angles translated into movement by using Euler's formula. Blocks 2 in this case are the regulators.

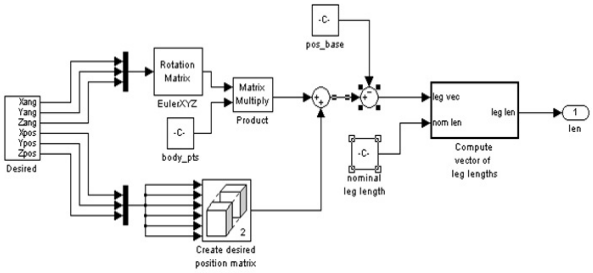


**Figure-6.** Scheme for trajectory conversion for leg of manipulator-tripod.

The information generated by the Euler formulas about movements are then fold with the matrix of displacement *1*, and the resulting linear movement of the center of mass of the platform are converted to change the lengths of the rods in the block 2 (Figure-7).

Each leg hexapod represented as a model in the program MathLab. In modeling the desired obtained value of length of the rod compared with current and supplied to the control system generates power value supplied to the drive of the rod.

In the result of modeling of the parallel kinematics manipulator can be obtained various dependencies. In this paper, we present some of them. In Figure-8 shown graphs of position coordinates of the center of the platform from time. Numbers 1, 2, 3, marked variation curves of the center of the platform to the coordinates *x*, *y*, *z* respectively. In Figure-9 shown the position error of parallel kinematic manipulator legs. Curves 1-6 denote positioning errors of each leg in a certain period of time.

VOL. 11, NO. 20, OCTOBER 2016 ISSN 1819-6608
ARPN Journal of Engineering and Applied Sciences

www.arpnjournals.com

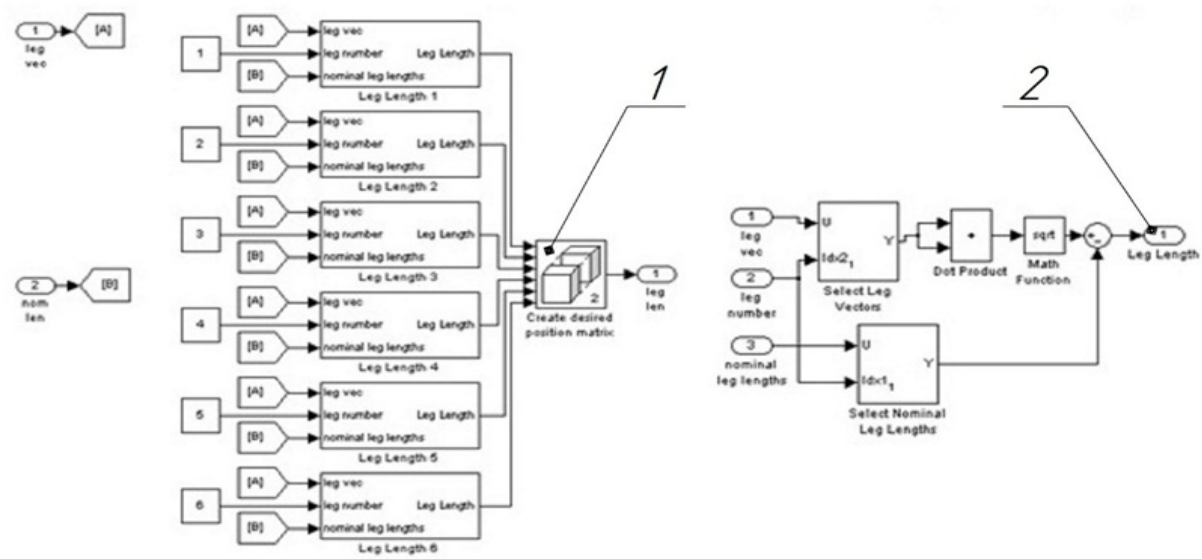


**Figure-7.** The scheme of the transformation of linear displacement in changing the lengths of the rods in the block.

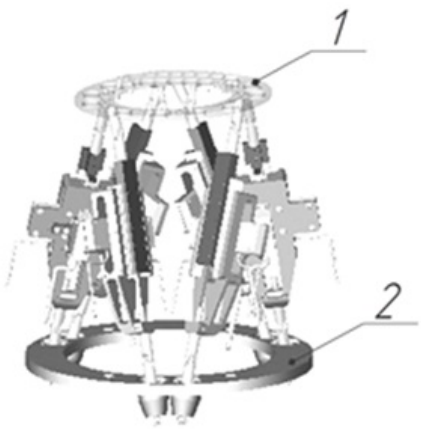


**Figure-8.** Graphs of position of moving platform center legs.

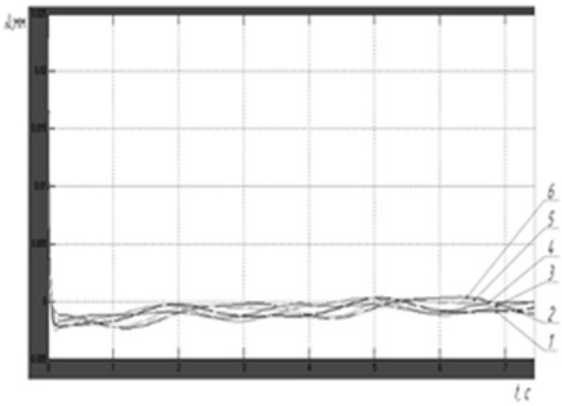


**Figure-9.** Positioning errors of manipulator.

Based on the dependencies can be concluded that the synthesis of a parallel kinematic manipulator based on superstability there are minimal positional error, and, consequently, to achieve sufficient quality control management systems.

## DEVELOPMENT OF SOFTWARE MODULES

We consider the problem of robot programming [9], providing for the implementation of operations, including a reciprocating motion output unit along a particular axis, and translational movement along the axis remaining after each cycle, a series of reciprocating movements or rotation movement series cycle (Figure-10).

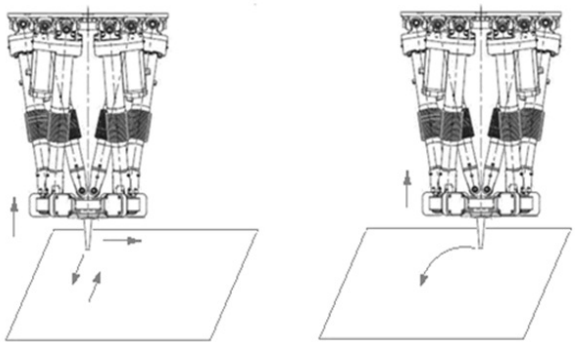

**Figure-10.** Scheme of the main movements performed by the robot.

The developed method of solving tasks - creation of algorithms built on the use of the cyclic structure of the program, as well as registers, which are assigned or are assigned at runtime specific values [10]. A large number of processes, as well as the conditions included in the algorithm have inside cycles and counters that allow you to complete the task in front of the unit. In addition to the algorithm includes the elements responsible for exhibiting registers default values at the beginning of the control

program, or, if necessary, elsewhere, and execution of commands, such as the output level to return to "home" point located above the zone in which moving link in progress.

Hexapod robot, which is implemented developed algorithm has 200 registers the numeric. 16 registers are reserved for the algorithm and used for counters and delimiters layers. The rest of the 184 numeric register used for data input, characterizing the work tool and the geometry of the coating, or printed items. Input register values can be carried out manually on the remote control of the robot, or from a computer using special software that analyzes the geometry and recording numerical values in the registers of the robot.

Algorithm for reciprocating motion (Figure.3) has a large number of cycles, carrying out inspection and search of necessary numerical values in registers at all "levels", from the coordinates of the points of a single line, and the direction of motion-enabled, or turned off the extruder and the ending number layers, which should perform the robot.

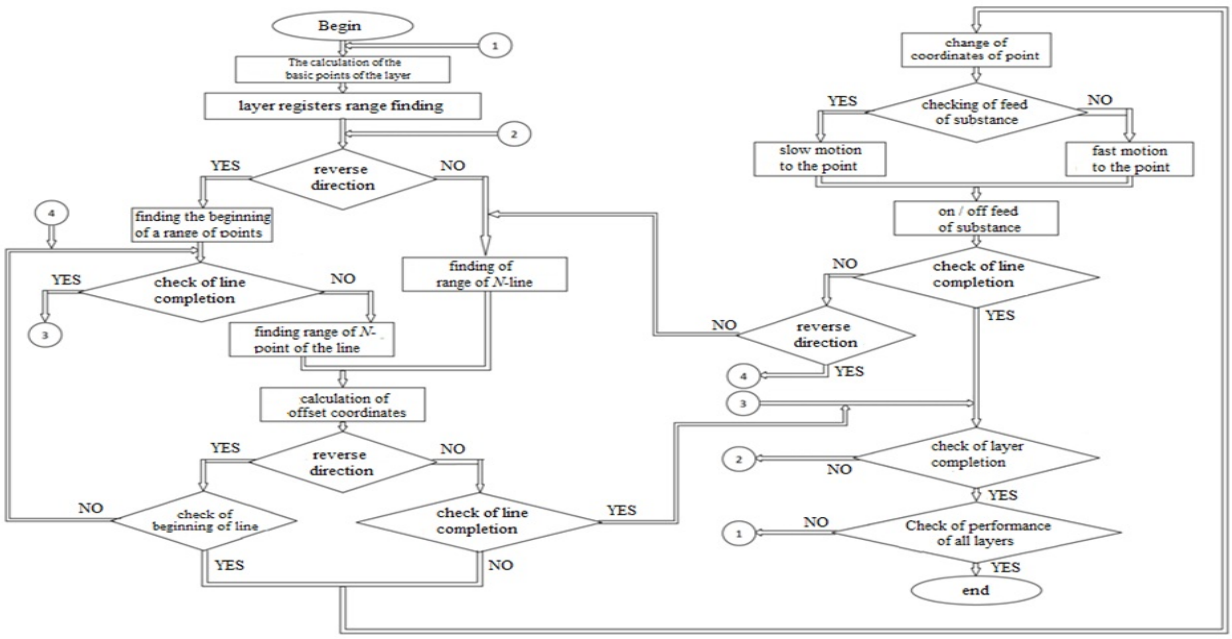


**Figure-11.** An algorithm for implementing the reciprocating movement.

Visualized path algorithm (Figure-12) to evaluate its accuracy. The output unit of the robot moves in the plane of reciprocating, moving one step, as a user-defined registers. After performing robot layer becomes the starting point of the next layer of the working substance without spraying.

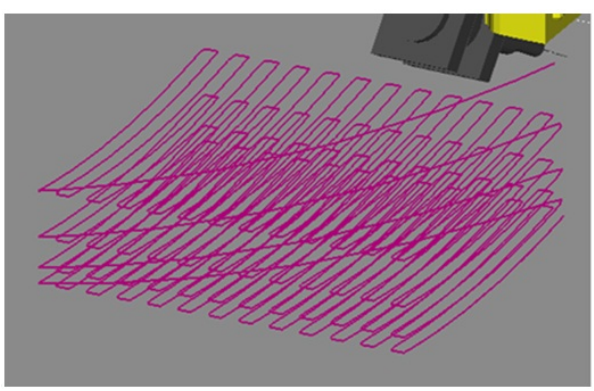

**Figure-12.** Visualized path algorithm reciprocating movements.

The developed algorithm for reciprocating motion applied system simplified recording coordinate values. Consider recording the coordinates of geometric shapes (Figure-13).

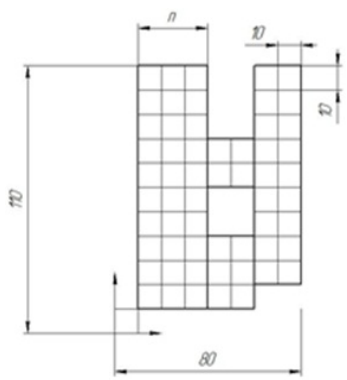


| #reg | Value |
|---|---|
| R1 | 3110 |
| R2 | 2080 |
| R3 | 2110 |
| R4 | 0 |
| R5 | 3010 |
| R6 | 2060 |
| R7 | 3010 |
| R8 | 0 |
| R9 | 3000 |
| R10 | 2040 |
| R11 | 2000 |
| R12 | 0 |
| R13 | 3000 |
| R14 | 2010 |
| R15 | 2000 |

**Figure-13.** – Register value range for the geometric figure.

We take the width of the spray nozzle 10 mm. R1 register is set to 3110, which means that 110 mm from the origin point to the first line in the three passages of the spray nozzle. Register R11 has the value 2000, which in turn means that the two fold lines in the third dot is absent. This method greatly facilitates the write registers and the task of the operator does not overload the numerical values of the system, when required to operate with linear faces having the same value for axis actuator reciprocation.

The algorithm for the realization of the rotational movement (Figure-14, 15) has a simple structure in the absence of reverse movements and recording geometry of circles with smaller volume reoccupation of numerical memory registers.

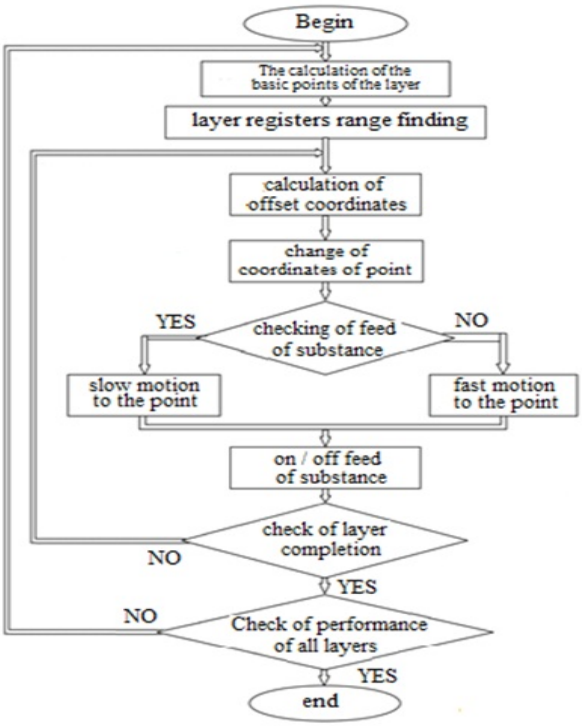


**Figure-14.** An algorithm for the implementation of the rotational movements.

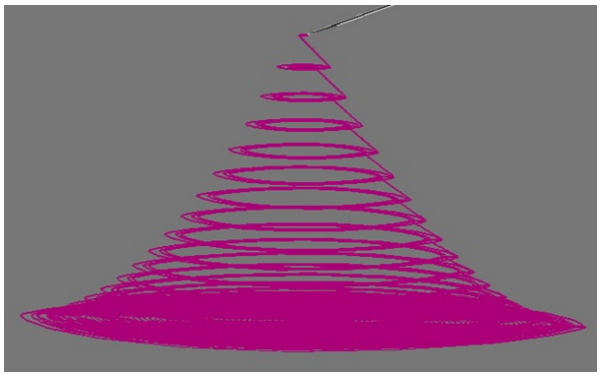

**Figure-15.** Visualized path algorithm execution of rotational movements.

The algorithm is an analogue of the need for expensive specialized software, including complex CAE-modules and postprocessors. The control program based on this algorithm has several advantages and distinctive features, including the use of a program to change the register, as well as ease of changeover program when performing simple tasks of coatings-and 3D-printing.

In addition, a wide range of possibilities open to the user through the use of specialized complex software created for communication between the hexapod robot and a personal computer. The robot controller is connected to the computer via Ethernet-connection (Figure.16).

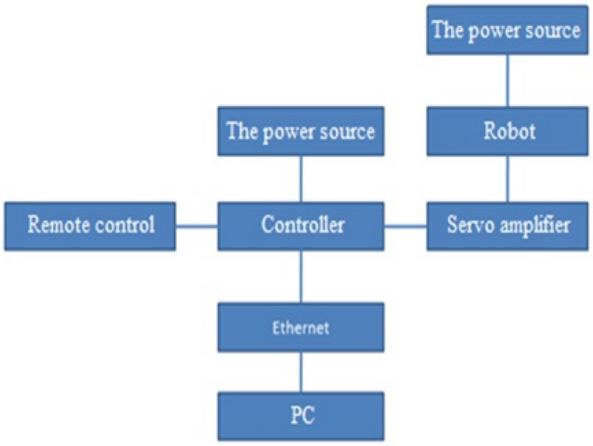


**Figure-16.** The circuit connecting links hexapod robot control.

## VISUALISATION OF ROBOT MOVEMENT

To complete the rendering process performance of the robot control program is one of the modules, which allows to reconstruct the real objects and the environment in which the robot operates. Also visualized and installed in a virtual environment tools, tools and other equipment, one way or another associated with the operation of the robot (Figure-17).

The program interface displays a virtual copy of the remote control, manual control. The virtual console is identical to the real one. This function opens a full functional operation and setting-hexapod robot with a PC.

The software system includes a module that allows you to create control programs and work out them, taking into account the geometric constraints on the path and the working area.

The software package can now create, edit, and save on your PC projects, including information about used robots and their settings at any given time; all control programs, available on the controller, the environment, added to the project. Creating a project is possible without connection to the robot by means of a set of files sent from the controller to the USB-drive, connected to a manual control panel or other USB-output controller. Installed on any computer software system can work with the project, or the creation of projects, with the help of the controller file.

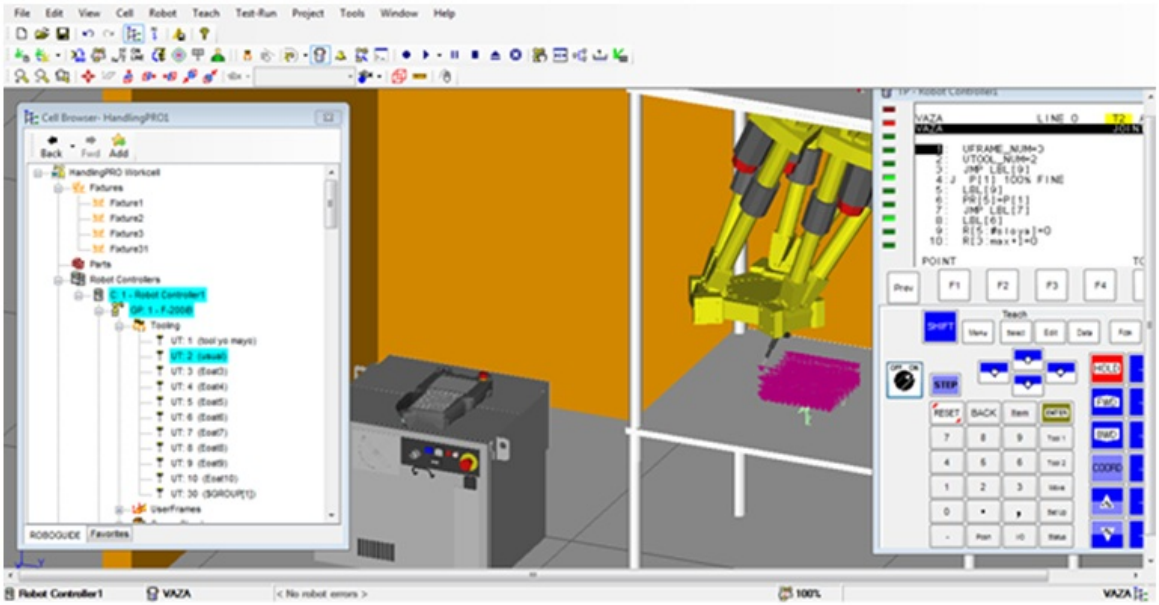

**Figure-17.** Working window of the software.

Run the control program followed by visualization of moving a working tool of the robot, if necessary equipment, such as a conveyor. The user can observe and draw conclusions about the correctness of the path end point of the working body, as visualized in the working window.

## CONCLUSIONS

As a result of this problem have been developed and implemented algorithms as part of control programs, allowing them to perform universalize similar technological problems. Possibility of easy resetting of depending on the input data and the output level of necessary paths of motion is implemented through the use of numeric registers, hexapod robot.

Considered control programs experimentally tested as a result of real tests on hexapod robot. And also visualized in the complex software to display the output trajectory of the robot link movements in a virtual environment, redundant real environment laboratory of experimental conditions, including tools and other objects that are in the immediate vicinity of the working area.

## ACKNOWLEDGEMENTS

This research work is executed with the support of the Ministry of Education and Science of the Russian Federation, the agreement # 14.577.21.0193.

## REFERENCES

[1] Afonin V.L., Podzorov P.V., Sleptcov V.V., 2006. Processed Equipment Base on Parallel Kinematics Mechanisms. M.: Machnostroenie, pp: 452.

[2] Volkomorov S.V., Kaganov Y.T., Karpenko A.P., 2010. Modeling and Optimization of Some Parallel Mechanisms. Information Texhnologies. Appendix, (5): 1 – 32.

[3] Glazunov V.A., Koliskor A.S., Krainev A.F., 1991. The Spatial Mechanisms with Parallel Structure. M .: Nauka, pp: 95.

[4] Rybak L.A., Chichvarin A.V., Mamaev Y.A., Gaponenko E.V., 2012. Synthesis of Control System of Single- and a Two-Section Manipulators with Parallel Kinematics. Fundamental Problems of Engineering and Technology, (2-6): 60-68.

[5] Rybak L.A., Gaponenko E.V., Mamaev Y.A., 2012. New Technologies of High-Speed Mechanical Processing on Machine Tools with Parallel Kinematics. Fundamental Problems of Engineering and Technology, (6): www.science-education.ru/106-7430

[6] Merlet J.P., 1988 Force-Feedback Control of Parallel Manipulators. Proc. IEEE Intern. Conf. Robot, and Automat., Philadelphia. Wash, Vol. 3: 1484-1989.

[7] Lazarev Y.F., 2005. Modeling of Processes and System in Matlab: Packages Signal Processing Toolbox and Simulink with Libraries Aerospace, SimPowerSystem, SimMechanics. SPb.: Piter publishing house, pp: 512.

[8] Rybak L.A., Gaponenko E.V., Chichvarin A.V., 2015. The Construction of the Inverse Dynamic Model of Parallel Robots Methods Structural Decomposition. Fundamental research, 11(7):http://fundamental-research.ru/ru/article/view?id=39838

[9] Date Views 30.06.2016 http://www.fanuc.eu/ru/ru

[10] Magergut V.Z., Ignatenko V.A., Bazhanov A.G., Shaptala V.G., 2013. Approaches to the Construction of Discrete Models of Continuous Technological Processes for the Synthesis of Control Automatic. Herald of the Belgorod State Technological University named after V.G. Shukhov, (2): 100-102.