VOL. 11, NO. 21, NOVEMBER 2016 ISSN 1819-6608
ARPN Journal of Engineering and Applied Sciences


www.arpnjournals.com

# A COMPREHENSIVE COMPARISON OF FACTS DEVICES FOR ENHANCING STATIC VOLTAGE STABILITY

Abdullah Asuhaimi Bin Mohd Zin[1], Mehdi Moradi[1], Azhar Bin Khairuddin[1], Naila Zareen[1], Amir Reza Naderipour[1] and Mohammad Moradi
[1]Faculty of Electrical Engineering, UniversitiTeknologi Malaysia (UTM), Johor, Malaysia
[2]Faculty of Electrical Engineering, Islamic Azad University (IAU), Sciences & Research Branch, Tehran, Iran
E-Mail: abdullah@fke.utm.my

**ABSTRACT**

Voltage stability improvement is an important issue in power system planning and operation.In this regard, this paper presents a comparison of FACTS devices for static voltage stability study. To achieve this, the performance of Shunt Capacitor, Static Var Compensator (SVC), and Static Synchronous Compensator (STATCOM) are compared under normal and contingency conditions. Result reveals that the correct position of STATCOM and SVC will increase voltage stability and power transfer capability.The paper provides a guide for utilities to have an appropriate choice of FACTS device for enhancing static voltage stability.

**Keywords:** static voltage stability, shunt capacitor, STATCOM, SVC.

## 1. INTRODUCTION

Today, complexity in operation of electrical equipment is one of new challenges on power systems. Moreover, excessive utilization of electrical equipment and increasing demand bring voltage instability as usual problem. Two methods are proposed for voltage stability analyses which are Static voltage stability and Dynamic voltage stability. Static analysis is based on algebraic equations and is faster than the dynamic analysis[1]. Providing reactive power in correct position will solve voltage instability. On other word, lack of reactive power in power system can lead to instability, voltage sag and fluctuation. As result, high current is produced will damage Consumers equipment. To increase stability and prevent voltage collapse tap changer under load (LTC) transformer, load shedding, reactive power generation and reactive power compensation are used. The most important methods of reactive power generation are as follow[2]:

- Generators (Direct).
- Fixed capacitor banks.
- Switched capacitor banks.
- Static VAR compensator (SVC).
- Static synchronous compensator (STATCOM).

Tap range restriction is the weakness of tap changer under load transformer. Furthermore, load shedding methods are less plausible than the reactive power injection methods. This is because of existence of controlling compensator and reduction of economic losses by removing the consumer loads[3]. On the other hand, direct reactive power generation by generators and installed capacitor banks are very slow in sudden load changes and rapidly usage. Therefore, the best solution is parallel compensator FACTS devices such as SVC and STATCOM. STATCOM is more efficiency compared with other parallel compensator FACTS devices [4].

In this paper the differences and benefits of shunt FACTS compensator devices and their operation strategy on voltage stability is investigated. Then, simultaneous utilization of STATCOM and SVC are simulated on desire system. Finally, results are tested and compared to validate the findings.

## 2. STATIC VOLTAGE STABILITY

Voltage stability is the ability of a power system to maintain voltages of power system buses after a disturbance in operating condition[5]. On the other hand, voltage stability is the ability of power system to maintain or restore equilibrium point between demand and supply[6]. Otherwise, instability results in progressive fall or rise of voltages in buses. Generally, loss of large loads, cascading outage of transmission lines and power system apparatus by protective schemes are pushing power system to voltage instability. Loss of generators synchronism event by outages or operating conditions is made to violate field current limitation [7]. Hence, conventional methods for improving static stability are [8]:

- Increasing the voltage.
- Constructing new transmission lines.
- Decreasing line series reactance by bundling.
- Installing series capacitors in transmission lines.
- Decreasing transformers series reactance.

### 2.1. Weakest bus

Weakest bus is defined as the nearest bus to the voltage collapse point. On the other word, weakest bus is defined as differential of voltage to deferential of load[9]:

$$\frac{dv}{dp_{total}} \tag{1}$$

Power flow equations give the differential change in the active power:

$$dp_{total} = cd\lambda \tag{2}$$

Where:

C = Constant Value
$p_{total}$ = Total active loads
$\Lambda$ = Set of uncontrolled parameters to represent system demand

Therefore, the weakest bus will be:

$$\text{Weakest Bus} = \max\left\{\left|\frac{\partial v_1}{c\,\partial\lambda}\right|, \left|\frac{\partial v_2}{c\,\partial\lambda}\right|, \dots, \left|\frac{\partial v_n}{c\,\partial\lambda}\right|\right\} \quad (3)$$

cdλ Value is the same as dv elements in given tangent coordination and the weakest bus is the bus with largest dv component [1]. Usually, reactive power setting in the weakest bus leads to marginal voltage stability which is improved with shunt capacitors or FACTS controllers. Moreover, compensating devices have different characteristics which create some problems with the static voltage stability.

## 3. COMPENSATOR SPECIFICATIONS

Shunt compensators are divided into conventional shunt capacitors and FACTS devices which are used to compensate reactive power[10]. Table-1 shows compare the approximate cost of a shunt controller.

**Table-1.**The approximate cost of a shunt controller.

| **shunt controller** | **Cost** (US$) |
|---|---|
| shunt capacitor | 8/KVar |
| SVC | 40/KVar |
| STATCOM | 50/KVar |

### 3.1. Shunt capacitor

Shunt capacitors are cheaper than other capacitors with easy installation and maintenance[11]. Usually, Shunt capacitors are installed in zones with heavy load[12]. But, Shunt capacitors are unable to regulate voltage at a certain level. Furthermore, shunt capacitor reactive power is related to the square of terminal voltage and Var support which will drop during voltage reduction. Figure-1 shows the curve of shunt capacitor performance.

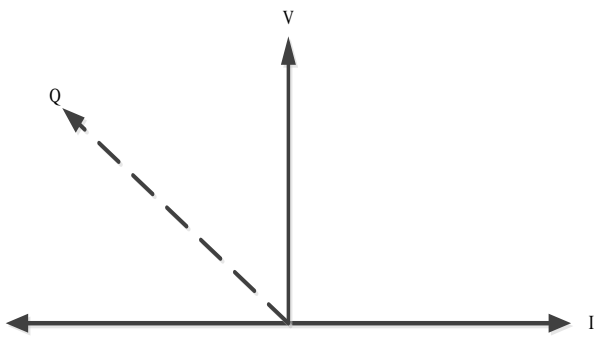


**Figure-1.** Shunt capacitor performance.

### 3.2. Static Var Compensator (SVC)

SVC compensator is the first developed compensator and introduced in the early 1970. This compensator is connected in parallel to the compensation point to control bus voltage[13].SVC is used to generate and consume static reactive power which is modelled as follows: Controllable range:

$$\begin{cases} I_{min} \le I_{SVC} \le I_{max} \\ V \ge V_{min} \end{cases} \quad (4)$$

$$V = V_{ref} - X_{st} \times I_{SVC} \quad (5)$$

Capacitive Limitations ($V < V_{min}$)

$$B = B_{max} \quad (6)$$

Inductive Limitations ($I_{SVC} > I_{max}$)

$$B = B_{min} \quad (7)$$

Where:

$V$ : Voltage
$I_{max}$ : Maximum Current
$I_{min}$ Minimum Current
B : Suseptance
$V_{ref}$ SVC reference voltage
$X_{st}$ : Characteristic impedance of controlling system
$I_{SVC}$ : SVC compensation current

Finding the right size and location is a major issue with SVC[14]. SVC operates as a voltage source with internal reactance, but SVC utilization limits are similar to fixed capacitor. Figures 2 and 3 show the basic structure and characteristics of SVC output, respectively.

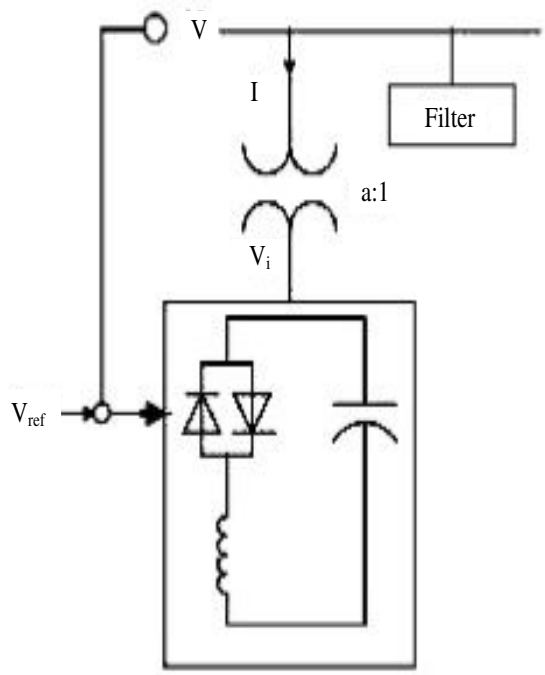


**Figure-2.** Basic structure of SVC.

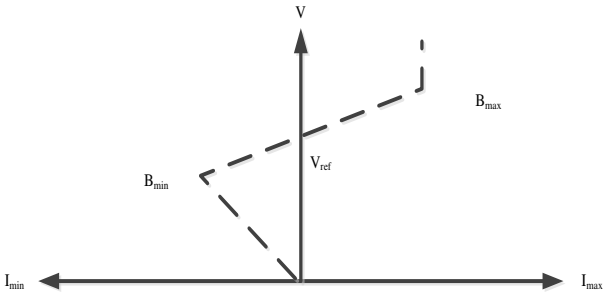


**Figure-3.** SVC characteristics output.

### 3.3. Static Synchronous Compensator (STATCOM)

STATCOM is a voltage source which converts DC voltage to AC voltage for compensating active and reactive power[10]. This equipment has better characteristics compared with SVC[15]. When the system voltage is reduced and STATCOM reaches to maximum power, the voltage is not affected on maximum reactive power output [16-17]. Characteristics and schematic diagram are shown in Figure-4 and Figure-5, respectively.

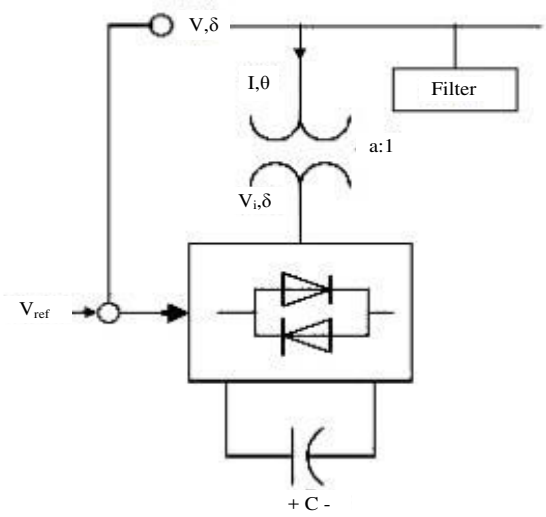


**Figure-4.** Schematic diagram of STATCOM.

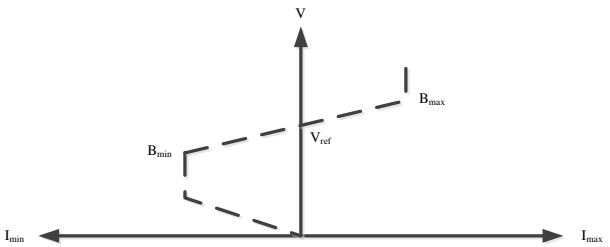


**Figure-5.**STATCOM characteristics output.

Figure-4 portrays compensation of reactive power by voltage source and DC power supply is replaceable with a small DC capacitor. Moreover, reactive power is exchanged between AC and DC part of STATCOM and converter charges the capacitor to hold the voltage at certain level. When the voltage produced by STATCOM is less than system voltage, STATCOM operates as inductive load and absorbs reactive power of system. On the other hand, STATCOM operates capacitor in parallel with transmission line and injects reactive power to system. STATCOM can control output current of AC voltage systems independently.

## 4. SIMULATION

In this article, simulating of SVC and STATCOM for voltage regulation is done at the midpoint of a 500 kV transmission line. A double ended 500 kV transmission line with 2500 MVA and 3000MVA short circuit capacity are connected to 600 km transmission line. When STATCOM is disconnected, the ability of transfer power of transmission line between bus 1 to bus 3 is 930 MW. Figure-6 shows the simulation of STATCOM. STATCOM is connected in the midpoint of transmission line with the range of 100 MVA in three levels. The STATCOM parameters used in the simulation are tabulated as follow:

**Table-2.** STATCOM Parameters.

| **Nominal DC voltage** | **40 V** |
|---|---|
| Capacitance | 375 µF |
| Total impedance | 0.22 p.u |

The impedance is addressed inductive resistance and leakage capacitive of the transformer.

### 4.1. Result and discussions

In this dynamic study, the AC voltage gains $K_p$ and $K_i$ are selected as 5 and 1000, respectively. Based on the block step voltage shown in Figure-7, the reference voltage is decreased from 1 p.uto 0.97 p.u in 0.2 seconds. Then the reference voltage is increased to 1.03 at 0.4 seconds and finally at 0.6 seconds reference voltage goes back to original value. However, during simulation the breaker at bus 1 need to be closed.

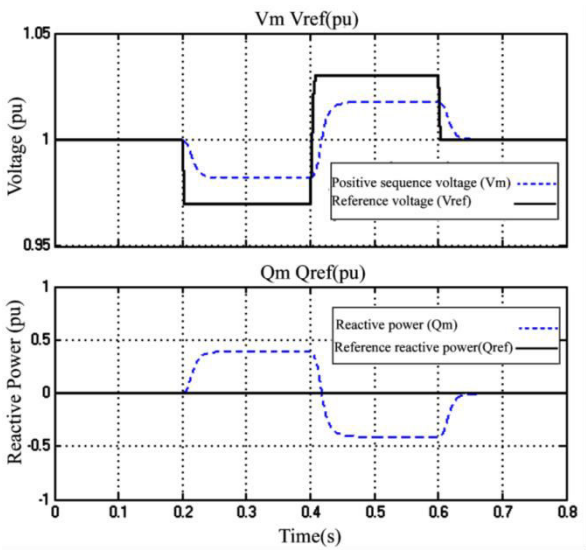


**Figure-6.** STATCOM and SVC in normal mode.

VOL. 11, NO. 21, NOVEMBER 2016 ISSN 1819-6608
ARPN Journal of Engineering and Applied Sciences

www.arpnjournals.com

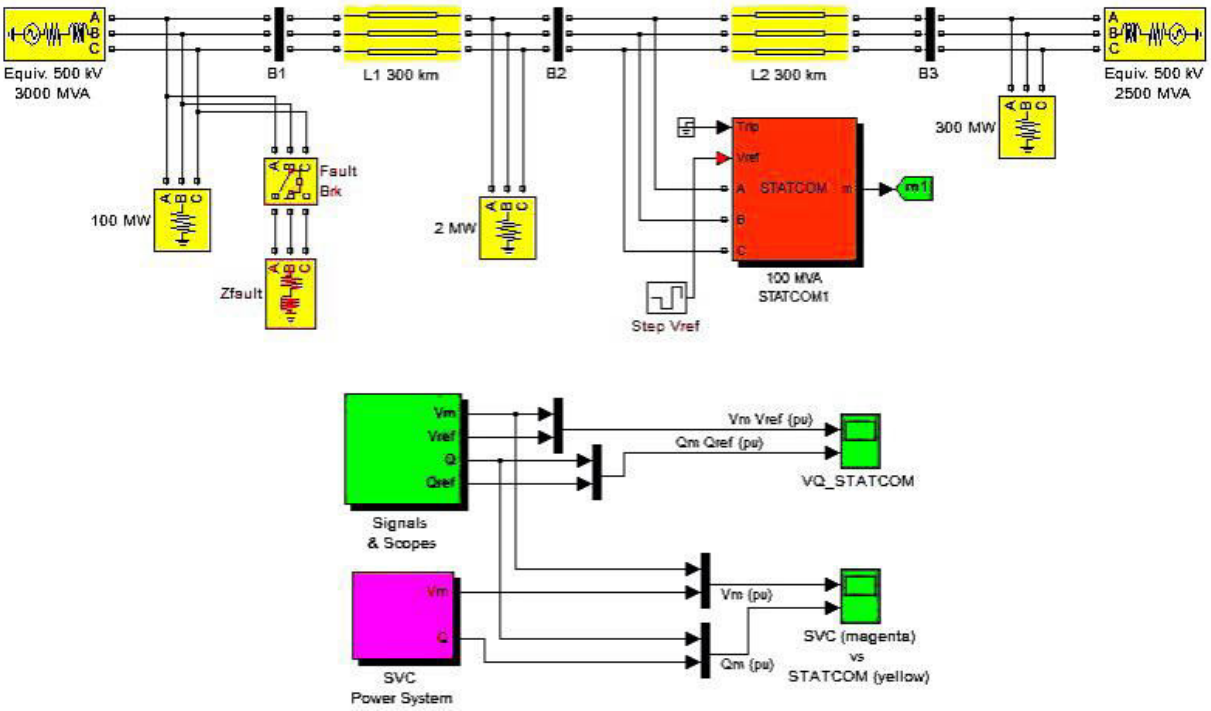


**Figure-7.** Simulated STATCOM.

Figure-7 portrays reference voltage ($V_{ref}$) in green colour, positive sequence voltage ($V_m$) and reactive power ($Q_m$) measured by the STATCOM in blue colour. With reference to ($V_{ref}$) and ($V_m$) signals, STATCOM does not operate as a full voltage regulator because ($V_{ref}$) does not follow ($V_m$).

### 4.2. STATCOM and SVC in fault mode

The Comparison of STATCOM and SVC in fault mode is presented in Figure-8. The measured voltage ($V_m$) and reactive power ($Q_m$) measured by the STATCOM and SVC can be seen which green colour is associated with SVC and blue colour is associated with STATCOM. SVC reactive power is generated at -0.48 p.u, while STATCOM reactive power is generated at -0.71 p.u. Moreover, maximum capacitive compensation generated by the SVC is proportional to the square of network voltage while the maximum capacitive compensation injectedby STATCOM is linearly varied with network voltage. Therefore,generating more capacitive compensationduring fault andfaster response are expressed as the priority of STATCOM overSVC.

## 5. CONCLUSIONS

In this paper the outcome of the simulation of shunt capacitor, STATCOM and SVC on static voltage stability are presented. Shunt capacitor, STATCOM and SVC can increase voltage stability and transmission line load ability. Moreover, STATCOM and SVC are used for dominating transmission line loss and voltage sag. STATCOM and SVC controlling parts compared with shunt capacitor are expensive. SVC placement in the correct location is very important and should be considered for optimum operating of SVC. Optimal location of SVC with reduces the economic costs and improves system response to disruption in both transient and steady state condition.

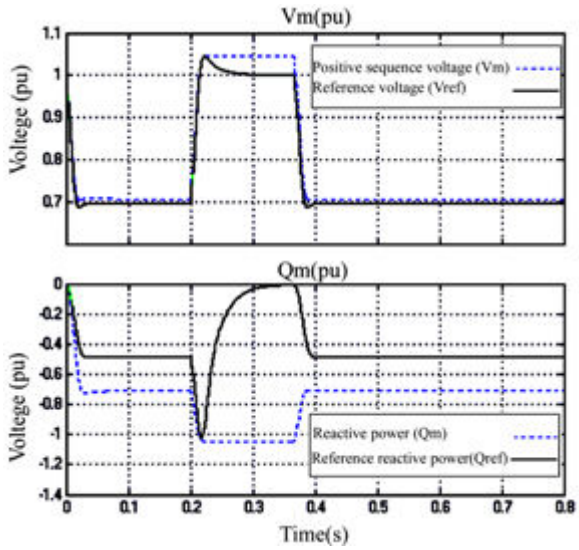


**Figure-8.** STATCOM and SVC in fault mode.

## ACKNOWLEDGEMENT

The authors wish to sincerely express their appreciation to the Universiti Teknologi Malaysia (UTM) for supporting thiswork through FRGS Grant (Vote No : 4F911) and Ministry ofHigher Education (MOHE) for providing funds to carry outthe research reported in this paper.

**REFERENCES**

[1] N. Boonpirom and K. Paitoonwattanakij. 2005. Static voltage stability enhancement using FACTS.in 2005 International Power Engineering Conference. pp. 711-715.

[2] M. Abido. 2009. Power system stability enhancement using FACTS controllers: A review. The Arabian Journal for Science and Engineering. 34: 153-172.

[3] D. Murali, D. M. Rajaram, and N. Reka. 2010. Comparison of FACTS devices for power system stability enhancement. International Journal of Computer Applications. 8: 30-35.

[4] A. Sode-Yome, N. Mithulananthan and K. Y. Lee. 2007. A comprehensive comparison of FACTS devices for enhancing static voltage stability.General Meetingin Power Engineering Society, 2007, China: 1-8.

[5] R. Sirjani and N. T. Bolan. 2016. An Improved Cuckoo Search Algorithm for Voltage Stability Enhancement in Power Transmission Networks. World Academy of Science, Engineering and Technology. International Journal of Electrical, Computer, Energetic, Electronic and Communication Engineering. 10: 513-517.

[6] C. Chang and J. Huang. 1998. Optimal multiobjective SVC planning for voltage stability enhancement. IEE Proceedings-Generation, Transmission and Distribution. 145: 203-209.

[7] A. Sode-Yome and N. Mithulananthan. 2004. Comparison of shunt capacitor, SVC and STATCOM in static voltage stability margin enhancement. International Journal of Electrical Engineering Education. 41: 158-171.

[8] A. S. Siddiqui and M. Rani. 2015. Enhancing the Power System Loadability Using STATCOM Device. International Journal of Scientific & Engineering Research. 6: 1567-1575.

[9] S. S. Bhole and P. Nigam, "Improvement of Voltage Stability in Power System by Using SVC and STATCOM," International Journal of Advanced Research in Electrical, Electronics and Instrumentation Engineering. 4:480-484.

[10] A. K. Nishad and A. Sahu. 2015. Development and Simulation of Voltage Regulation System of AC Transmission lines using Static Synchronous Compensator (STATCOM).

[11] G.-s. Lee, S.-i. Moon, R.-k. Kim and C.-k. Kim. 2015. Reactive power control operation scheme of LCC-HVDC for maximizing shunt capacitor size in AC systems.Conferencein Power and Energy Engineering (APPEEC), 2015, Brisbane, Australia: 1-5.

[12] H. E. Farag and E. F. El-Saadany. 2015. Optimum Shunt Capacitor Placement in Multimicrogrid Systems with Consideration of Islanded Mode of Operation. IEEE Transactions on Sustainable Energy. 6: 1435-1446.

[13] A. H. Al-Mubarak, M. H. Khan, and M. Z. Al-Kadhem. 2015. Dynamic Reactive Power Compensation for voltage support using Static VAR Compensator (SVC) In Saudi Arabia.Conference inElectrical Power and Energy (EPEC), 2015, London, UK: 484-490.

[14] K. Bansal, K. Parihar, and A. Garg. 2016. Instantaneous Reactive Power Compensation and Voltage Stability with Thyristor Switch Capacitor (TSC) and Static Var Compensator (SVC). International Journal of Research. 3: 484-488.

[15] L. Alavudeen, J. Das and P. Scholar. 2016. Modelling and Analysis of Static Synchronous Compensator for Reactive Power Compensation. International Journal of Engineering Science. 6:1-8.

[16] S. Shankar, K. Veeramanju, and L. Yathisha. 2015. Application and Comparison of Optimum Linear Quadratic Regulator Controllers for the Improvement of Static Synchronous Compensator Performance. Journal of Mechatronics. 3: 153-156.

[17] M. Zin, A. Asuhaimi, M. Moradi, A. Khairuddin, and M. Moradi, "An Analytical Literature Review of the Available Techniques for Relieving Transmission Line Bottleneck in Deregulated Power Systems," in Applied Mechanics and Materials. 8:124-128.