VOL. 11, NO. 24, DECEMBER 2016 ISSN 1819-6608
ARPN Journal of Engineering and Applied Sciences

www.arpnjournals.com

CHLORIDE STRESS CORROSION CRACKING (CSCC) OF AUSTENITIC STAINLESS STEEL UNDER THERMAL INSULATION: CASE STUDY ANALYSIS

Prema Sivanathan, Mokhtar Che Ismail and Kee Kok Eng
Department of Mechanical Engineering, Universiti Teknologi Petronas, Bandar Seri Iskandar, Perak, Malaysia
E-Mail: mokhtis@petronas.com.my

ABSTRACT

Corrosion under insulation (CUI) is a severe problem for 304 stainless steel pressure vessel. This study is to identify factors responsible for loss of production due to problems in plant and equipment. The combined action of tensile stress with corrosive environment can lead to chloride stress corrosion cracking (CSCC). Chloride stress corrosion cracking initiates from sites of localized pitting or crevice corrosion. The initiation of crack is more dependent on chloride concentration but less dependent on temperature. However, the growth and propagation of a crack is widely affected by temperature and less affected by chloride concentration and pH. In austenitic stainless steel, the main forms of corrosion are pitting and stress corrosion cracking caused by chlorides. In this study the influence of operating conditions such as chloride concentration, temperature on stress corrosion cracking of austenitic stainless steel will be investigated. Corrosion problems arise in situations due to cycling temperatures which vary from below the dew point to above ambient temperatures. The investigations will be carried out under thermal insulation, which modifies the local corrosion conditions and it has never been investigated to the best of our knowledge. At the end of the research, the conditions where SCC occurs will be defined and documented.

Keywords: corrosion, cracking, concentration, stress, temperature.

INTRODUCTION

Stress corrosion cracking (SCC) of austenitic 304 stainless steel in chloride environment is a common problem in industries [1-3]. Stress corrosion cracking is the cracking of a susceptible metal under the mixed influence of a tensile stress either residual or applied in a corrosive environment [4-6].The understanding of cracking mechanism is complex since there are various factors that can initiate and propagate crack events. Many research on SCC have studied but contributing factors still remains unclear. Furthermore reoccurrence of SCC cases also due to other reasons such as standards and specification are not fully followed as a guidelines in industries to avoid such failures.

Conditions required for SCC to occur such as susceptible metal, a specific environment and a tensile or residual stress [6]. The combined effect of stress with environment are root causes of initiation of crack and propagation. The SCC cracks may be intergranular or transgranular depending on the materials, stress conditions and the environment. Transgranular cracking is the most common type in concentrated chloride environment [7-9]. This recent case study further will be investigated in laboratory to understand the crack appearance.

The growth and propagation of a crack is widely affected by temperature and less affected by chloride concentration and pH [10]. The susceptibility of austenitic steels to SCC increases with temperature [11]. Stainless steels does not crack in strong chloride environment at ambient temperature. [5, 12, 13]. The austenitic grades are also effectively immune to stress corrosion cracking in water at temperature below about 50 °C. Since hydro static testing is usually performed at ambient temperature, the problem is unlikely to happen. However, pressure vessels are exposed to hot work operation in service and care should be taken to avoid excessive temperatures. Stress corrosion cracking (SCC) susceptibility laboratory tests of U-bend specimens at 43, 85, and 120 °C were tested by Xi *et al*. [14]. Only specimens tested at 43 °C exhibited cracking. Exposure of time simultaneously influence to the cracking process. More sample found cracked and the lengths of cracks were increased. Above 85 °C temperature there is no appearance initiation of SCC [7, 14]. The initiation of crack is more dependent on chlorides concentration and less on temperature [9, 10].

The main focus of this study is to understand the consequences of chloride susceptibility on the stress corrosion cracking of austenitic 304 stainless steel. The specific objectives includes to understand the SCC failure analysis for austenitic 304 stainless steel pressure vessel leakage. Simulate the SCC initiation for austenitic 304 stainless steel in laboratory to determine the effect of different concentrations of chloride and temperature. At the end of the research, the conditions that could trigger SCC will be identified and documented

METHODOLOGY

A case study was taken to understand stress corrosion cracking mechanism on austenitic stainless steel 304. This leads to an experimental stimulation in corresponding to the relevant results obtained from the inspection site.

a) Design details

Material: AISI type 304L austenitic stainless steel Environment: Gas processing plant pressure vessels under thermal insulation at north and south plant was leaking during operation. Chloride concentration and

temperature used is the main contributing factors to the susceptibility of stress corrosion cracking in austenitic stainless steel 304.

b) Detection of crack and characterizations

Visual Inspection: Sub-surface cracks were identified initially by using simple visual inspection method.

Non-Destructive Testing: Dye-penetrant testing used to inspect surface cracks in depth and the crack lengths on the vessels was measured.

Characterization of crack morphology: Microstructure, SEM & EDX

c) Experimental design from case study

Below is the experimental set-up to study the stress corrosion cracking contributing factors which is chloride concentrations and temperatures on the austenitic stainless steel 304 susceptibility. Figure-1 shows the schematic diagram of U- Bend sample preparation stages as per ASTM G-30.U-Bend sample preparation: A U-bend specimen is prepared from a flat bar which bent 180° levels as given dimension in Figure-2. A bolt and nuts are used to tighten up to sustain a constant strained conditions throughout stress corrosion testing. Figure-3 shows the U-bend sample with dimension (mm) as recommended in ASTM G-30.

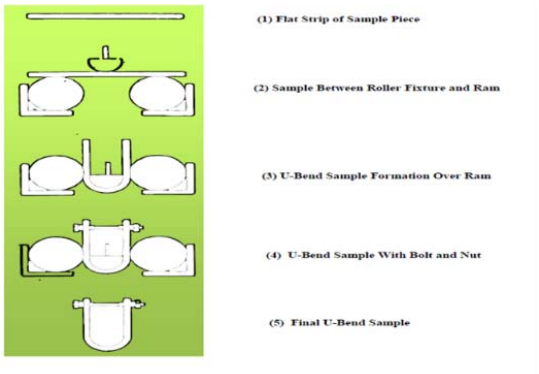

Figure-1. Schematic diagram of U-bend sample preparation stages as per ASTM G30 [15].

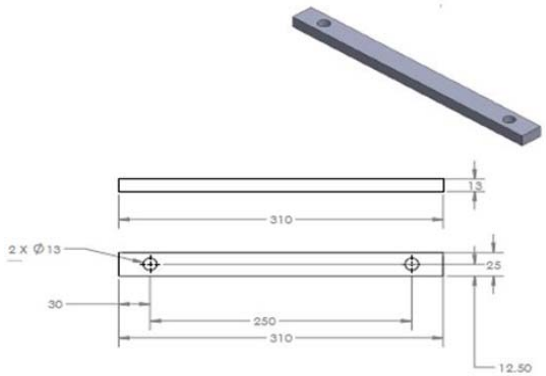

Figure-2. Flat specimen with dimension (mm) [16].

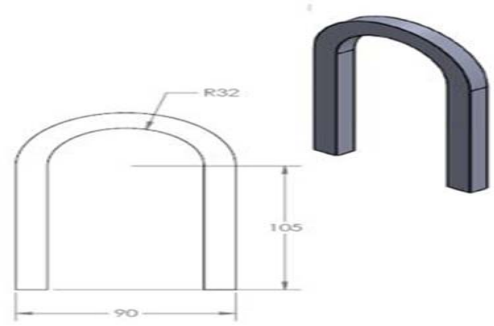

Figure-3. U-Bend test specimen with dimensions (mm) [16].

As reported by ASTM G-39, Standard practice for preparation and use of bent-beam stress corrosion test specimen. For a better analysis of results, the presence of residual stress (before applying external stress) or the total elastic stress (after applying external stress) can be evaluated by using suitable non-destructive method , in this case X ray diffraction method [17]. The three factors which contribute to CLSCC is the use of susceptible grades AISI 304. It is respect to the yield strength (0.2% proof strength), which is from structural or applied as residual stresses from fixing or welding working during fabrication and commissioning. Test parameters as shown below in Table-1.

Table-1. Parameters.

Test Parameters	Baseline Measurement	Proposed Measurement
[Cl^-] ppm (salt fog condition)	200	30 ([29]) -2000
Temperature (°C)	43 °C [10, 30] & 60 °C [29]	60,90 & 120 °C [29, 30]
Time (h)	510 (20days)-1008(42days) [10, 13]	500 (20days)- 1000 (42days)
Test Method	U-Bend (ASTM G-30) [10, 24, 30]	
Characterization	-Visual Examination [13] - X-ray computed tomography [20] or Dye Penetrant testing -SEM & EDX [13] -Finite element analysis [20] -X-ray diffraction analysis [25]	

RESULTS & DISCUSSIONS

Based on the results by non-destructive inspection the crack appearance and length has been measured. The gas processing plant pressure vessels at north and south plant view was leaking during operation. Material used is AISI type 304L austenitic stainless steel. Table-2 shows the design data for the pressure vessel. Figure-4 shows the schematic design of pressure vessel tank.

VOL. 11, NO. 24, DECEMBER 2016 ISSN 1819-6608
ARPN Journal of Engineering and Applied Sciences

www.arpnjournals.com

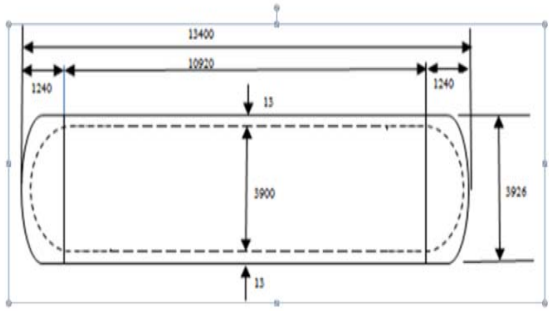

Figure-4. Schematic design of Pressure vessel tank. Note: All the dimensions are in mm.

Table-2. Design data for MD-931.

Parameter	Value
Design Temperature	-160/60 °C
Operating Pressure	90.5 Psi (624 KPa)
Design Pressure	350 Psi (2413 KPa)
Insulation classes	Perlite (thickness 50 mm)

Based on dye penetrant testing on pressure vessel leakage was found from external surface. The pressure vessel was with insulation in operation condition. Failure of the AISI type 304L stainless steel was by leakage. Dye penetrant test was completely carried out at full body and at weld of equipment (accessible area). Based on the inspections conducted on the external surface, linear and rounded indications were found during inspection time. At the external surface of the tanks revealed improper passivation as a results of dye penetrant testing. Few areas was attacked with SCC external surface due to atmospheric corrosion. The inspection results, base and weld metals affected with pitting and crevice corrosion is revealed in Figure-5.

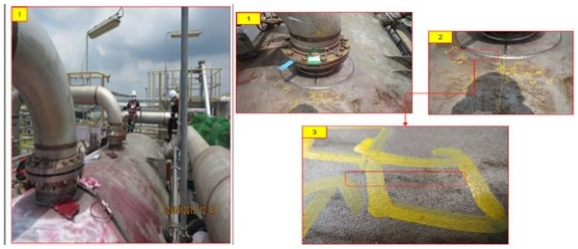

Figure-5. General view top shell from east plant side.1, 2 & 3 typical finding as above.

The results indicated presence of stagnant water in service which supposed to be drained out after the hydrostatic test. In this case, maybe water was stagnant in the vessel. The samples of water should be analysis for CI contents. At a number of places crevices had formed due to weld spatter and excess penetration of weld deposit and gap between reinforcement ring and shell surface [18].

As the inspection results indicated that the crack was found at the top shell. This crack is the same crack found during external Dye Penetrant Testing. As shown in Figure-6.

Figure-6. Crack found at internal top tank same location as the external surface.

The water should have been stagnant for a period of time inside the vessels. However, the corrosion attack was only found at the bottom of the inside surface of the vessels where water was stagnant. Water with the presence of chlorides ions contributed to corrosion at crevices of the tank as showed in Figure-7.

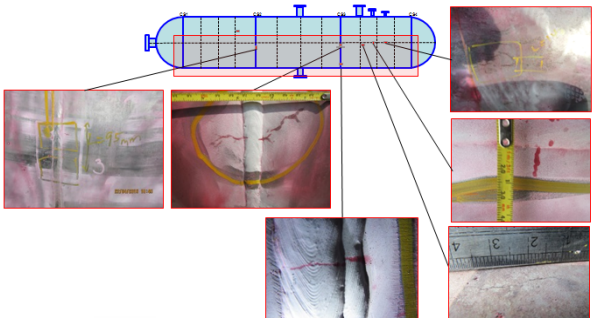

Figure-7. Mapping of crack indication located at North plant view (bottom half).

Figure-8 and 9 below shows the inspection results of measured crack length indications found on the pressure vessel tank.

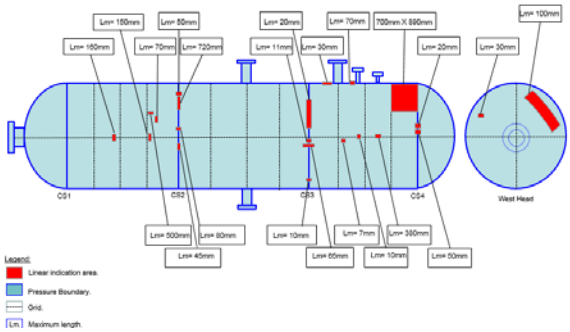

Figure-8. Linear crack Indication (North plant view).

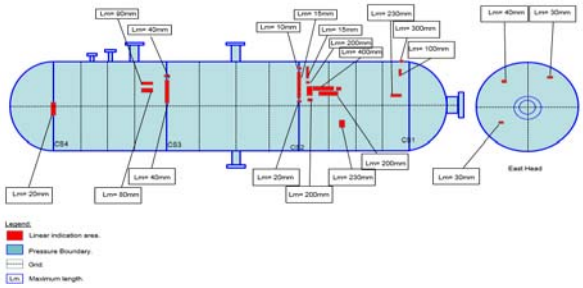

Figure-9. Linear crack indication (South plant view).

EDX analysis

The foam was used as an insulator blanket for pressure vessel. Energy Dispersive X-Ray Microanalysis was examined on the samples. Based on the Energy Dispersive X-Ray (EDX) test on the outer and inner surface of the foam indicates the foam consists of chloride.

Mastic adhesive is a very strong bonding material mostly used for industrial applications. Derived from resin of mastic tree and synthetically manufactured. Three different types of mastic available such as liquid, glue, and paste form. Mastic can permanently bind many different materials together, mostly on hard and non-porous surfaces. General weakening and discoloration will appears into cracks and crevices after some time.

The presence of halide ions in this case chloride is high in 304L pressure vessel which may have trigger the stress corrosion cracking. Analysis has been done on outer and inner surface of the foam. Analysis on the mastic has been done on top surface. The inspection analysis were given in Table-3 and Table-4. The summary of linear indication showed in Table-5.

Table-3. EDX analysis for insulator foam-Perlite (wt%).

		Cl	O	Al	Si	Ca	C
3	Outer	10.17	19.77	1.30	5.8	9.83	47.92
	inner	1.96	33.72	2.51	27.49	13.27	11.46
6	Outer	9.71	31.14	5.26	12.26	27.56	8.84
	inner	9.67	31.21	5.25	12.22	27.37	8.91
9	Outer	9.66	19.80	3.09	3.35	4.27	55.29
	inner	-	29.15	2.23	33.54	6.34	22.43
12	Outer	10.26	17.22	1.23	4.14	3.16	58.62
	inner	8.76	29.79	1.14	4.08	36.20	17.26

Table-4. EDX analysis for Mastic (wt%).

		Cl	O	Al	Si	Ca	C
Mastic	Overall surface	11.15	19.53	1.07	4.76	4.49	51.14
	particle	5.38	20.48	2.80	15.04	4.00	40.25

Table-5. Summary of linear indication length for pressure vessel.

Pressure Vessel Locations	Linear Indication Length of crack Lm (mm)						
	North plant view			South plant view		West Head	East Head
	Base Metal (BM)	Weld Metal (WM)	Close to nozzle	Base Metal (BM)	Weld Metal (WM)	Base Metal (BM)	Base Metal (BM)
CS1 – CS2	70 150 160 500	45 50 80 720	N/A	15 100 200 200 200 230 230 300 400	10 15 20	30 100	30 30 40
CS2- CS3	N/A	10 11 20 65	N/A	N/A	40 40		
CS3-CS4	7 10 380 700 X 890	20 50	30 70	80 90	20		

General remarks on external cracks:

- Most cracks were found on external wall of base metal, they were mostly on the upper half of pressure vessel tank.
- More cracks appeared on base metal between CS1 – CS2 and no cracks were found between CS2 –CS3.
- Cracks close to nozzle were found only at CS3-CS4.
- Very minimal cracks were found on internal wall.
- Only a small number of cracks were found in the vessel heads.
- No preferential orientation of the crack length.

CONCLUSIONS

As a conclusions, to study the parameters which causes the initiation of CLSCC. This susceptibility affected by environment which includes chloride concentrations, temperature, presence of stress, surface finish and metallurgical changes of steel.

REFERENCES

[1] Cottis, R., Guides to Good Practice in Corrosion Control—Stress Corrosion Cracking. National Physical Laboratory, Teddington, 2000.

[2] Contreras, A., *et al*., Assessment of Stress Corrosion Cracking on Pipeline Steels Weldments Used in the Petroleum Industry by Slow Strain Rate Tests. 2011: INTECH Open Access Publisher.

[3] Ziaei, S.M.R., *et al*., Failure analysis: Chloride stress corrosion cracking of AISI 316 stainless steel downhole pressure memory gauge cover. Engineering Failure Analysis, 2013. 33: p. 465-472.

[4] Dergach, T., *et al*., Corrosion-Cracking Resistance Test Procedure of Stainless Steel Tubular Billets and Pipes. Metallurgical and Mining Industry, 2010. 2(2).

[5] Pal, S. and R.S. Raman, Determination of threshold stress intensity for chloride stress corrosion cracking of solution-annealed and sensitized austenitic stainless steel by circumferential notch tensile technique. Corrosion Science, 2010. 52(6): p. 1985-1991.

[6] Batty, W., P. O'Callaghan, and S. Probert, Corrosion under insulants. Applied energy, 1984. 16(4): p. 239-247.

[7] CEPA, Stress Corrosion Cracking recommended practices, 2nd edition An industry leading document detailing the management of transgranular SCC. 2007. Second edition.

[8] Roffey, P. and E.H. Davies, The generation of corrosion under insulation and stress corrosion cracking due to sulphide stress cracking in an austenitic stainless steel hydrocarbon gas pipeline. Engineering Failure Analysis, 2014. 44: p. 148-157.

[9] García, C., *et al*., Effects of prior cold work and sensitization heat treatment on chloride stress corrosion cracking in type 304 stainless steels. Corrosion science, 2001. 43(8): p. 1519-1539.

[10] Spencer, D., *et al*., The initiation and propagation of chloride-induced transgranular stress-corrosion cracking (TGSCC) of 304L austenitic stainless steel under atmospheric conditions. Corrosion Science, 2014. 88: p. 76-88.

[11] Fritz, J.D. and R.J. Gerlock, Chloride stress corrosion cracking resistance of 6% Mo stainless steel alloy (UNS N08367). Desalination, 2001. 135(1): p. 93-97.

[12] Turnbull, A. and S. Zhou, Impact of temperature excursion on stress corrosion cracking of stainless steels in chloride solution. Corrosion Science, 2008. 50(4): p. 913-917.

[13] Probert, S. and S. Giani, Thermal insulants. Applied Energy, 1976. 2(2): p. 83-116.

[14] Xie, Y. and J. Zhang, Chloride-induced stress corrosion cracking of used nuclear fuel welded stainless steel canisters: A review. Journal of Nuclear Materials, 2015. 466: p. 85-93.

[15] Prakash, T., O.H. John, and A.U. Malik, Studies on the Stress Corrosion Cracking (SCC) Behavior of Various Metals and Alloys Used in the Desalination and Power Plants. Journal, Al-Jubail, Kingdom of Saudi Arabia.

[16] G30-97, A., Standard Practice for Making and Using U-Bend Stress Corrosion Test Specimens. 2000.

[17] G-39, A., Standard Practice for Preparation and Use of Bent-Beam Stress Corrosion Test Specimens. p. 7.

[18] Parrott, R. and H. Pitts, Chloride stress corrosion cracking in austenitic stainless steel. Health and Safety Laboratory, Buxton, Derbyshire, UK, 2011.