VOL. 12, NO. 1, JANUARY 2017 ISSN 1819-6608
ARPN Journal of Engineering and Applied Sciences

www.arpnjournals.com

HARDWARE IMPLEMENTATION OF PFC BUCK-BOOST CONVERTER DRIVEN PMBLDC MOTOR DRIVE FOR MINING APPLICATIONS

Parandhaman Balamurugan and Chandrahasan Umayal
School of Electrical Engineering, VIT University, Chennai, India
E-Mail: cumayal@yahoo.com

ABSTRACT

The purpose of this paper is to digitally simulate a voltage source inverter (VSI) fed permanent magnet brushless DC Motor (PMBLDCM) with buck-boost converter for power factor correction (PFC) and adjustable speed along with developing a hardware prototype. The buck-boost converter is preceded by a single-phase AC-DC converter. The concept of DC link voltage is used in the control scheme proposed in this paper, whereby the required speed of the brushless DC motor is proportional to this voltage. To regulate the motor speed PI controller is used. The design of the aforementioned PFC buck-boost converter based brushless DC drive is done along with the simulation model using MATLAB-Simulink environment for mining applications. This system provides greater efficiency, improved power factor and dependable operation ranging from a speed of zero to high value. The proposed control strategy was implemented in hardware and a comparative analysis is made with conventional methods. With buck-boost converter, the power factor is found to have improved. The proposed PFC converter has improved power factor, reduced harmonics and simplified the control strategy. The experimental based results were compared with the simulation results.

Keywords: filters, buck-boost converter, total harmonic distortion, closed loop systems, permanent magnet BLDC motors, power conversion, power factor correction.

1. INTRODUCTION

At present there is an increased focus on the cost of energy, both in terms of value and impact of it on the environment. With the need to reduce energy costs and to focus on the environment issues, an efficient control of machines that power the mining industry is crucial. Mining industry which conserves precious fossil fuels should employ modern motor controls for safe and reliable operation. Hence PMBLDC motors find a prominent place in mining to reduce losses in energy. Due to the absence of brushes PMBLDC motors are the most desirable motors for mining applications since they do not produce spark. Good dynamic response, better efficiency, less noise, wide speed ranges are the features that attract PMBLDC for practical applications. Advancements in power converter technology simplify the control of PMBLDC and make it versatile. These motors are electronically commutated [1-3].

The PMBLDC drive constitutes a brushless DC motor which is normally powered by a single-phase alternating current, via a bridge rectifier and a trailing DC link capacitor along with a voltage source inverter. Pulsed current waveform is the outcome of the DC-link capacitor. The peak value of this current is more than the fundamental input current at AC mains. Hence this circuit pattern undergoes severe disturbances in power quality like less PF and higher current THD at the supply. Furthermore, the low power equipment should follow the European standards for power quality requirements such as IEC 61000-3-2 [4-5] which demands the current drawn by such equipment to have almost unity power factor and low harmonic contents. Thus usage of a converter for power factor correction has become inevitable for a PMBLDCM drive. To make the load appear as resistive, even with a distorted line voltage, superior quality converters are used in between AC line and DC load [6-10].

Boost topology is the most prominent topology to be used in the industry. For low power application this converter operates in the discontinuous conduction mode (DCM) while for high power applications it operates in the continuous conduction mode (CCM). Though buck regulator can also be used, its efficiency is lower than that of the boost converter. Significant harmonics develop when the instantaneous line voltage falls below the output voltage, thereby resulting in distinct turn off.

The traditional active PFC converter utilizes the bridge rectifier and an expensive inductor, which results in higher cost, power loss and lesser efficiency. Besides these drawbacks, the power switches in these converters are in both ON state and OFF state during the entire supply period. This produces stresses in voltage and current, increasing switching loss and conduction loss, which limits the converter efficiency [3].

Various topologies of converters with PMBLDC motor drives were also proposed for power factor correction like zeta converter, Cuk Converter, bridgeless-Luo converter, bridgeless CSC converters. [11-14].

This paper presents a buck-boost converter based PFC converter for a PMBLDC drive. There are two loops attached to the buck-boost converter. The inner loop is the current loop having a current error amplifier which will improve the power factor of the system by comparing the input current with sinusoidal current reference .The voltage error amplifier in the outer loop regulates output voltage and it minimizes distortion.

2. EFFECT OF FILTERS IN POWER FACTOR CORRECTION

A brushless DC motor fed from single-phase AC mains through a diode bridge rectifier, a smoothening DC

capacitor and a voltage source inverter constitute the PMBLDC drive. Nevertheless, such circuit arrangement leads to lower power factor, increase in input current THD, which is primarily due to the overcharging of DC capacitor. Therefore, it is necessary to design a suitable passive filter to reduce THD and to improve the power factor of a PMBLDC drive supply.

2.1 PMBLDC drive without filter

The VSI fed PMBLDC motor without any filter is shown in Figure-1. The input voltage and current waveforms of the VSI fed PMBLDC motor are shown in Figure-2. It can be seen that the current is displaced by 88° and the power factor is much lesser with this system. The FFT analysis has been done to get the output voltage of the motor, and the THD is found to be 17.11%, and is shown in Figure-3.

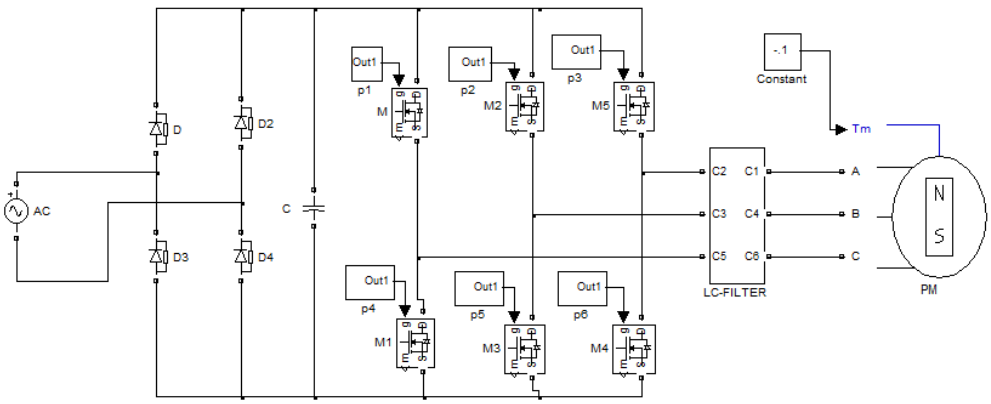

Figure-1. VSI fed BLDC motor with the capacitor filter.

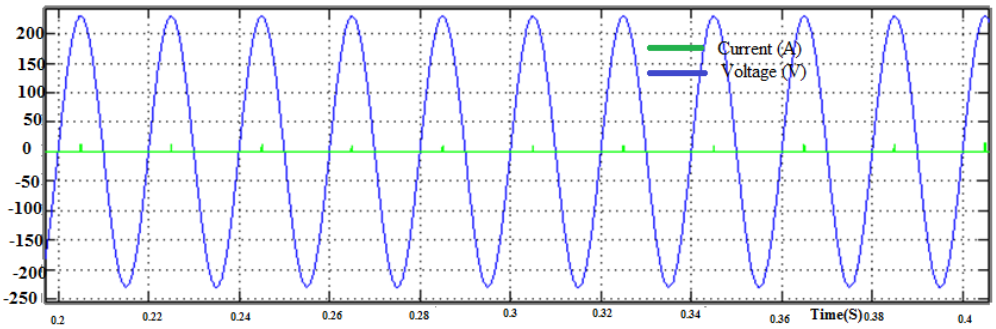

Figure-2. Input voltage and current waveforms of the VSI fed BLDC motor.

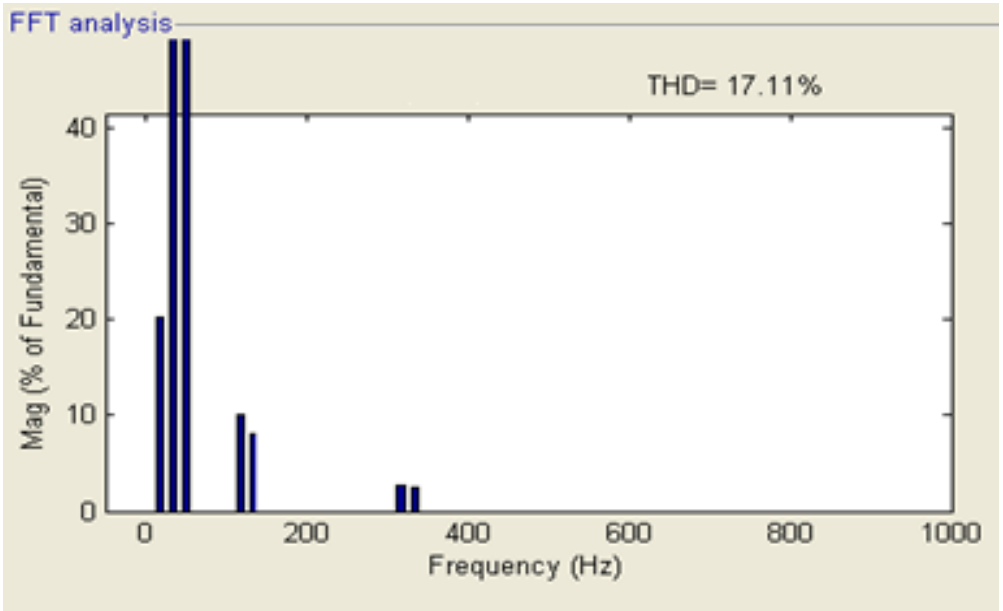

Figure-3. Line spectrum of the output voltage.

2.2 PMBLDC drive with L-filter

The schematic diagram of the PMBLDC drive including L-Filter is depicted in Figure-4. Over the whole frequency range the attenuation of the basic inductor filter is about -20dB/decade. The THD of current without L-filter is 20.2% [11].

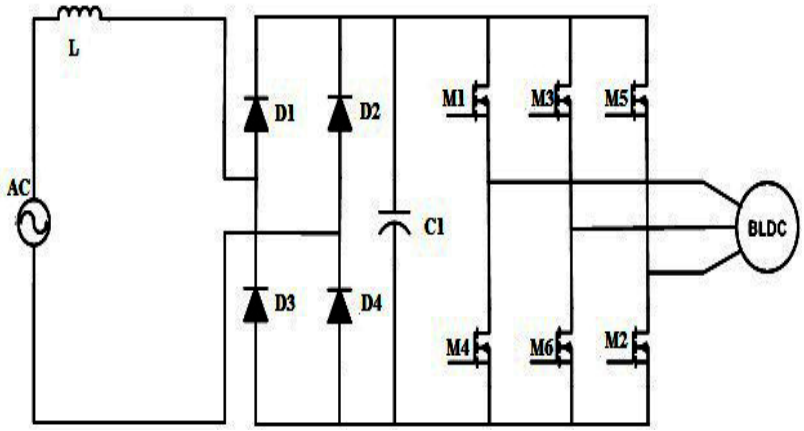

Figure-4. VSI fed PMBLDC motor with L-Filter [10].

The simulation results of the PMBLDC drive including L-Filter is presented. The phase angle difference stays at 54°. Figure-5 depicts the phase relation between input voltage and current.

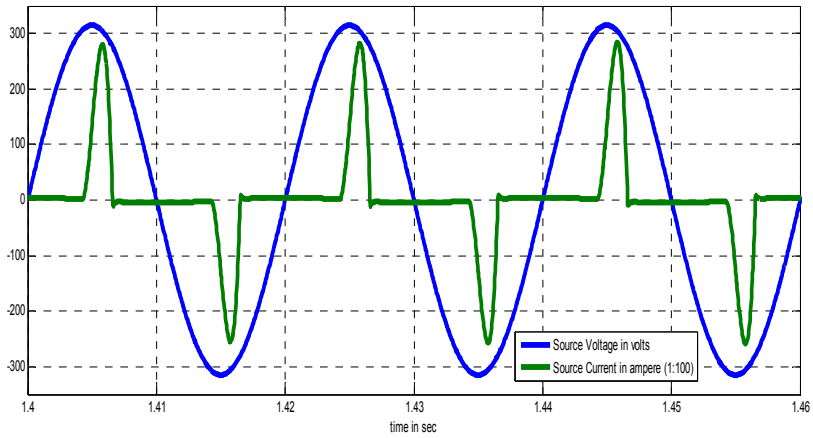

Figure-5. Voltage and current waveforms of a PMBLDC drive with L-Filter.

Thus it is seen that with L-filter, the power factor has improved comparitively when no filters are used with VSI fed PMBLDC motor. Figure-6 depicts a THD of 13.98% and the frequency spectrum of a PMBLDC drive using L-filter at the input side.

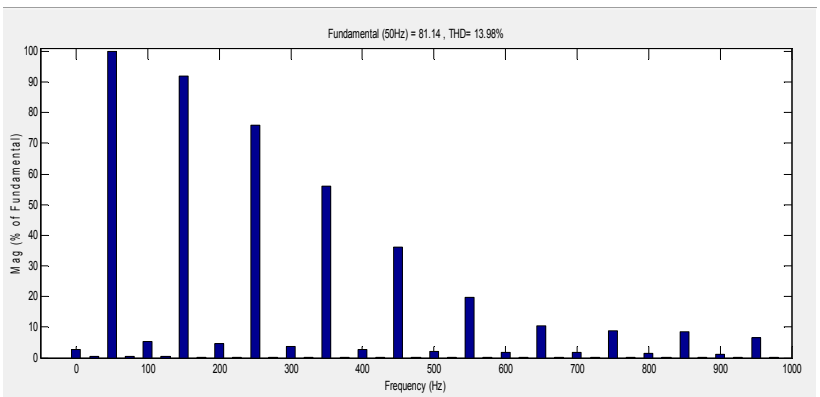

Figure-6. Frequency spectrum with L-Filter.

Thus THD is found to have reduced by adding an inductor filter.

2.3 PMBLDC Drive with T–Filter

To improve the attenuation of disturbances, a capacitor is used as a shunt element, which should have high impedance. Further improvement in the input power factor is attainable with the use of T-filter. Figure-7 displays the schematic diagram of the PMBLDC drive using T-Filter.

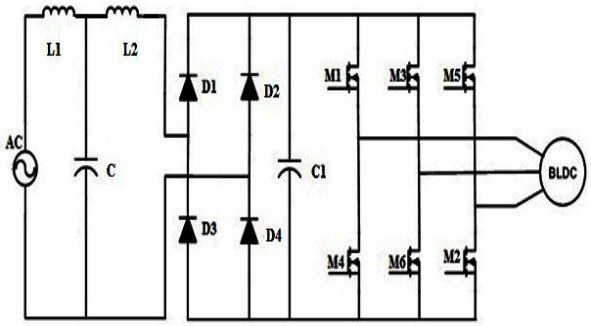

Figure-7. Voltage source inverter fed PMBLDC motor using T-Filter [11].

T-filter is capable of reducing high-order current harmonics and ripple in output voltage. The high frequency harmonics and transients are blocked by the capacitor from being coupled to the source. The performance of T-Filter is better than L-Filter in terms of

attenuation of inverter switching harmonics thereby achieving low harmonic distortion.

The digital simulation of the PMBLDC drive with T-Filter is carried out. The input voltage and current of the drive is shown in Figure-8. Relationship between the phase of input voltage and current is reduced to 24° as shown in the simulation results. Therefore the power factor is seen to have improved to 0.9135 compared with L- Filter. Figure-9 depicts the FFT spectrum of the PMBLDC drive with T-filter and the THD is found to have reduced to 11.59%.

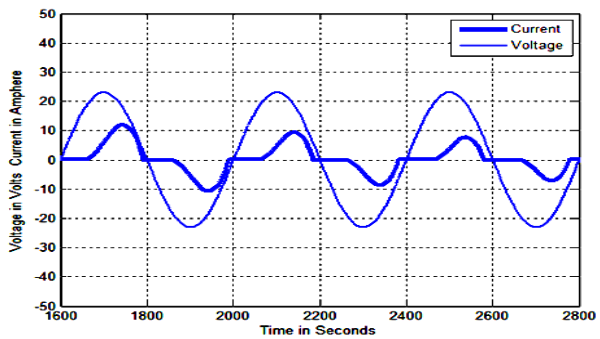

Figure-8. Source voltage and current waveforms.

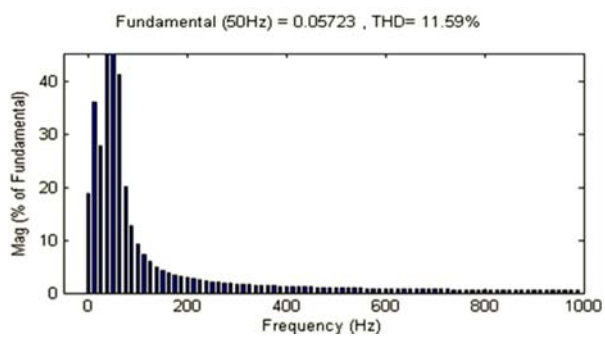

Figure-9. FFT spectrum of a PMBLDC drive with T-Filter.

3. PFC BUCK-BOOST CONVERTER

Figure-10 depicts the typical topology of PFC buck-boost converter. An AC supply provides the input to the buck-boost converter, through a diode bridge. It constitutes an alternating supply voltage at the input, a capacitor represented as C, an inductor represented as L, and a switch S and R which is a load resistance. The storage elements of the circuit are the inductor and the capacitor [10, 15]. This arrangement permits the voltage at the output either to be more or less compared with the input voltage which is influenced by the duty ratio'd'.

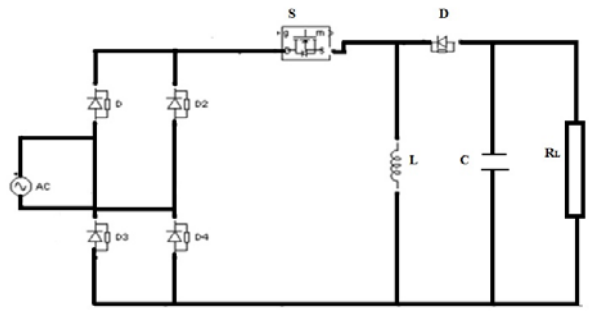

Figure-10. PFC buck-boost converter topology.

Equation (1) represents the voltage transfer gain of buck boost converter

$$\frac{V_o}{E} = -\frac{d}{(1-d)} \tag{1}$$

Current transfer gain is

$$\frac{I_o}{I_m} = -\frac{(1-d)}{d} \tag{2}$$

The design specifications for the PFC buck-boost converter are taken as i) supply voltage = 230V, ii) L = 150 mH, iii) C = 220μF, R= 5 Ω.

4. SCHEME FOR THE PROPOSED PFC BUCK-BOOST CONVERTER BASED PMBLDC DRIVE

A PMBLDC drive with buck-boost converter is shown as a detailed block diagram in Figure-11. The torque developed in a PMBLDC motor is related to the phase current and back-EMF depends on its speed. Hence the constant stator winding current along with variable terminal voltage maintains a constant torque in a PMBLDC motor in variable speed applications.

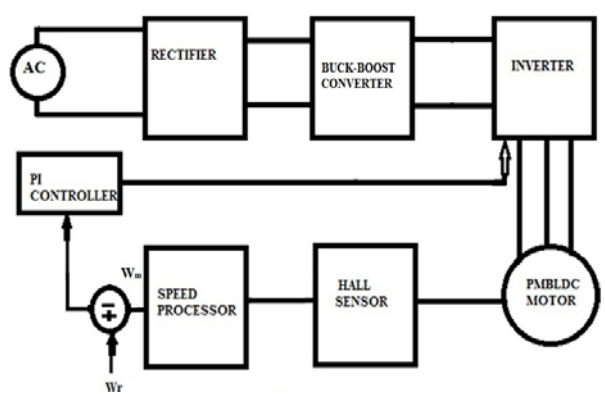

Figure-11. Schematic of the PMBLDC drive with buck-boost converter.

In the speed control of PMBLDC drive, the reference speed is considered proportionate to the DC link voltage [16-17]. Hall Effect sensors which are placed at

60º sense the rotor position. The switching sequence for the inverter feeding the BLDC motor is derived from the rotor position. Input to the PI controller is the speed error arising from the difference between the reference speed and the actual speed, which is subsequently used to correct the pulse width of the buck-boost converter and this improves the power factor on the supply side [3].

Hall position sensors provide the switching sequence for the voltage source inverter which is listed in the following truth table given in Table-1.

Table-1. Output from the Hall Effect sensors [10, 11].

Output from the Hall Effect sensors			Switching signals					
H_a	H_b	H_c	S_{a1}	S_{a2}	S_{b1}	S_{b2}	S_{c1}	S_{c2}
EMF_a	EMF_b	EMF_c	M_1	M_2	M_3	M_4	M_5	M_6
0	0	0	0	0	0	0	0	0
0	-1	+1	0	0	0	1	1	0
-1	+1	0	0	1	1	0	0	0
-1	0	+1	0	1	0	0	1	0
+1	0	-1	1	0	0	0	0	1
+1	-1	0	1	0	0	1	0	0
0	+1	-1	0	0	1	0	0	1
0	0	0	0	0	0	0	0	0

5. AN APPROACH TO THE PROPOSED SYSTEM

Figure-12 depicts the buck-boost converter as its simulated model. Using Matlab/ Simulink environment, the suggested system is realized and the performance evaluation is done for mining applications. Rated torque of the load is considered to be 5.5Nm. A 0.5kW rating PMBLDC motor drives the load whose speed is effectively regulated by variation of link voltage. The simulated model of the suggested closed-loop system of permanent magnet BLDC motor using PFC buck-boost converter with a PI controller is found in Figure-13. At 1800 RPM which is the rated speed, the capability of the proposed system is evaluated based on THD and PF.

Figure-14 depicts the waveforms of the supply voltage and input current which are in phase with each other, thereby exhibiting a power factor which is almost unity during starting. At time t=1 sec, a step change is applied to load torque as seen from Figure-15. The response of speed can be found from Figure-16. The PI controller is made use of to follow the reference speed which facilitates the motor to attain the reference speed within 0.2sec. Figure-17 gives frequency spectrum of the proposed buck-boost converter system.

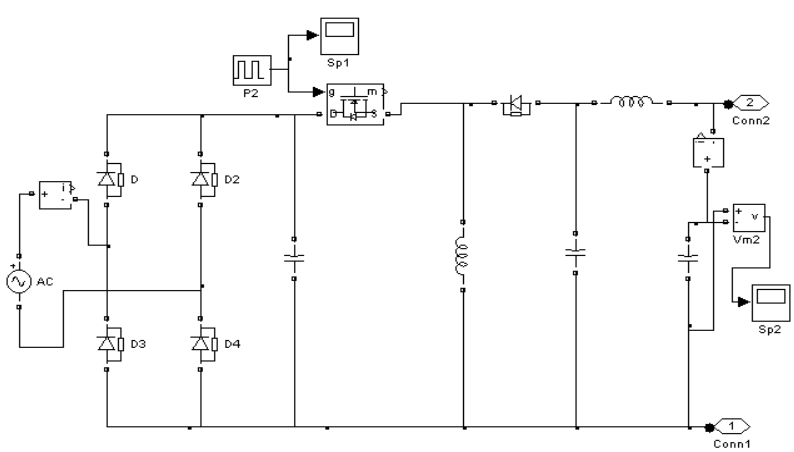

Figure-12. Simulink model of the PFC buck-boost converter.

ARPN Journal of Engineering and Applied Sciences

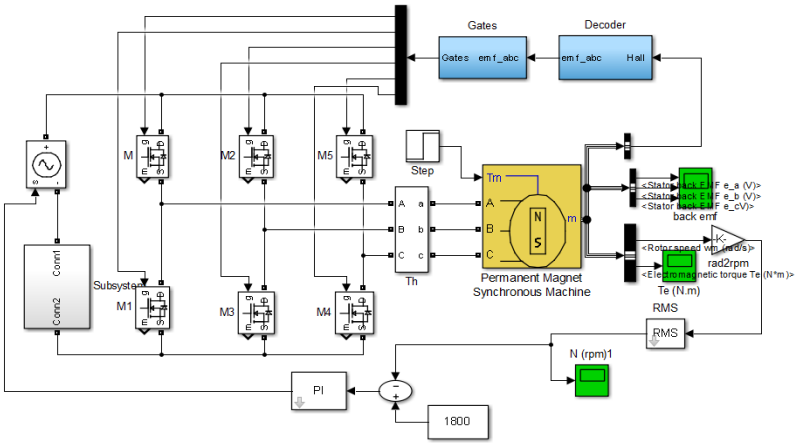

Figure-13. Closed-loop system of PFC buck-boost converter fed permanent magnet BLDC drive.

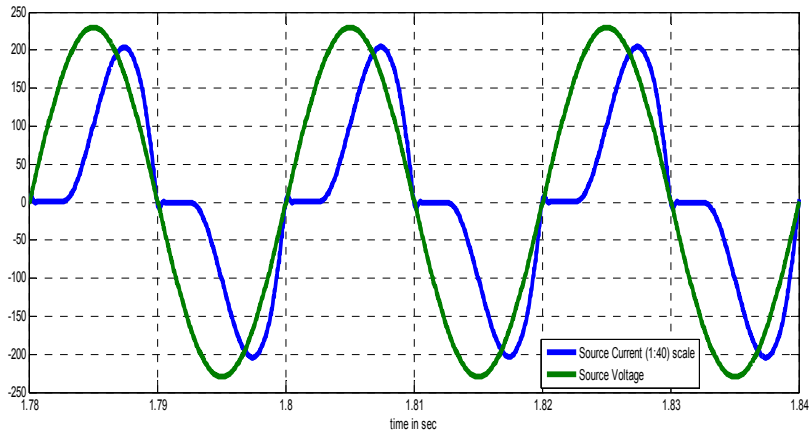

Figure-14. Supply voltage and input current.

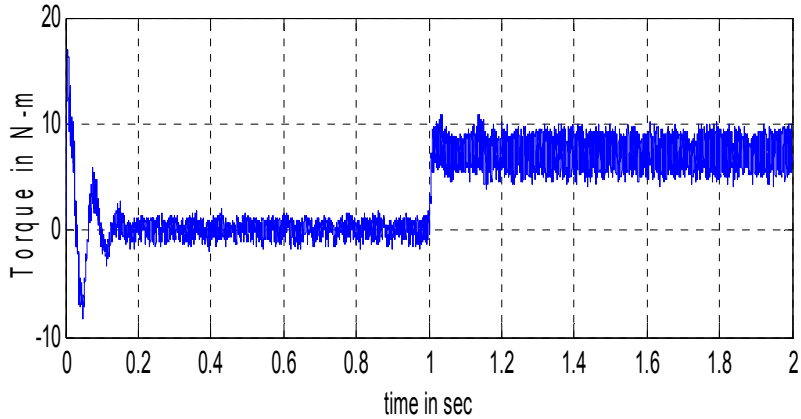

Figure-15. At time t=1 sec, a step change is applied to load torque.

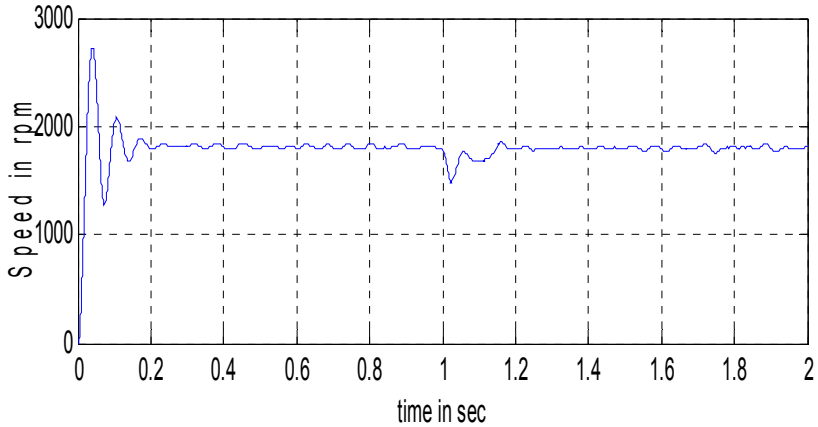

Figure-16. Response of the speed of PFC buck-boost converter fed PMBLDC drive.

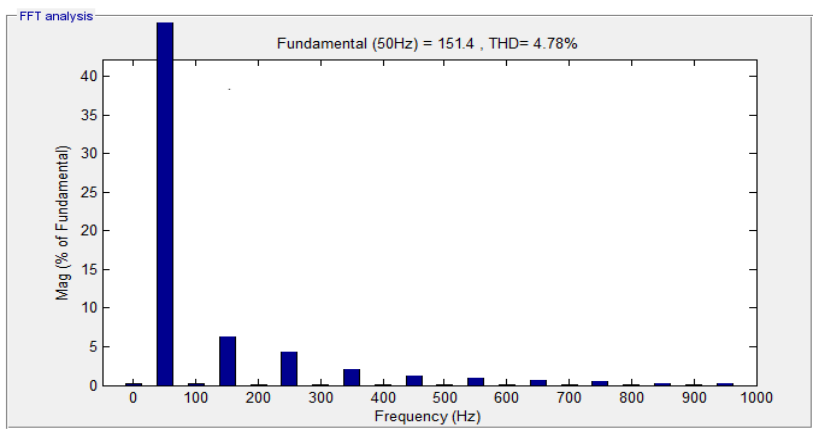

Figure-17. Frequency spectrum of buck-boost converter system.

The THD is found to have reduced to 4.78% with the use of buck-boost converter as PFC converter in a PMBLDC drive.

Table-2. Comparative analysis of angular difference between supply voltage and current, PF and %THD in phase current for various schemes with PMBLDC motor at 1800 rpm.

PFC converter fed BLDC motor	Angular difference between supply voltage and current	PF	THD (%)
without filter	88°	0.017	17.11
With input L-filter	54°	0.5878	13.98
With input T-filter	24°	0.9135	11.59
with Buck-Boost Converter	4°	0.9873	4.78

Table-2 shows the phase difference between supply voltage and current in a PMBLDC drive with and without power factor correction, Power factor and %THD in phase current for various schemes with PMBLDC motor at 1800 rpm. Table-2 also shows a steady decrease in phase angle between the supply voltages and current when an input L-filter, input T-filter and buck-boost Converter are used for power factor correction. With T-filter the power factor of the drive system has improved to 0.9135 with THD in the phase current to about of 11.59%. Using buck-boost converter the power factor is found to have improved to near unity and THD is found to have reduced to minimum value.

6. EXPERIMENTAL RESULTS WITH A BUCK-BOOST CONVERTER FED SYSTEM

The closed loop controlled PMBLDC drive with buck-boost converter is fabricated and tested. The experimental prototype is shown in Figure-18. The scaled measurements of the voltage and currents at the input are shown in Figure-19. The test results reveal that the voltage and current are in phase with each other. The spectrum

analysis of the harmonics in source current is shown in Figure-20.

Figure-18. Experimental setup.

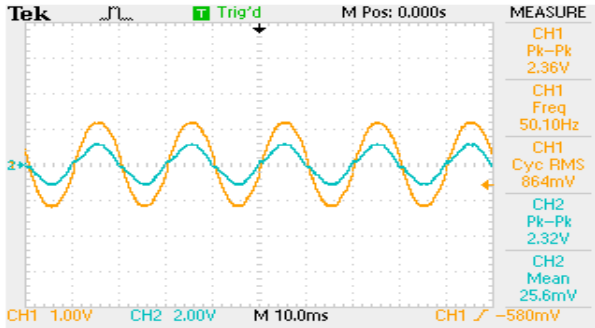

Figure-19. Waveforms of input voltage and current.

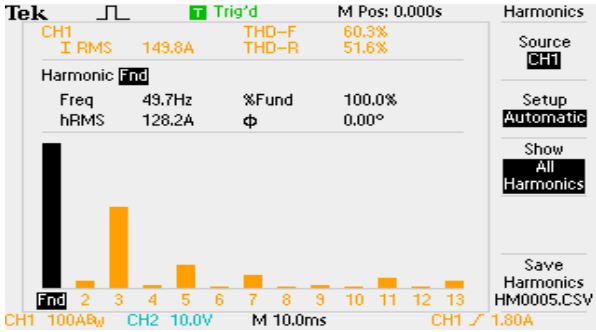

Figure-20. Harmonic spectrum of source current.

The source current is phase displaced by zero degree, which implies the power factor is unity at the source end.

7. CONCLUSIONS

Design and simulation of a PFC buck-boost converter fed PMBLDC drive for mining application is presented. The proposed drive is also implemented using a prototype. The switching signals for the inverter are obtained from speed and position feedback signals of the drive. The experimental based results obtained from the developed prototype are found to be in accordance with the results obtained from simulation. A certain level of power factor improvement has been noticed when the buck-boost converter is used as PFC converter. The performance is found to have increased due to the improvement in the power factor. With the buck-boost converter, power factor is found to be almost closer to one over a broad range of supply voltage. This proposed drive can be a promising PFC converter that can be used with PMBLDC drives.

Since the absence of brush in the PMBLDC drive eliminates sparking, this drive is found to be more applicable for mining applications. Our contributions to this work are the modeling and simulation of a closed loop drive system and development of algorithm for the prototype. In this present work a microcontroller is used which produces a 20 kHz pulse frequency. The results of buck-boost converter based drive system are compared with those of PMBLDC drive system with L-filter and T-filter. Power factor is improved with simultaneous reduction in THD with the proposed system

REFERENCES

[1] Kenjo T. and Nagamori S. 1985. Permanent Magnet Brushless DC Motors, Clarendon Press, Orford, UK.

[2] Sokira T, J. and Jaffe W. 1989. Brushless DC Motors: Electronic Commutation and Control. Tab Books.

[3] Umayal C. and Rama Reddy S. 2011. Modeling and simulation of closed loop controlled PFC half bridge converter fed PMBLDC motor using Simulink. Journal of Electrical Engineering. 4:375-387.

[4] Limits for Harmonic Current Emissions (Equipment input current ≤ 16A per phase), International Standard IEC 61000-3-2, 2000.

[5] Singh S. and Singh. B. 2009. Power quality improvement of PMBLDCM driven air-conditioner using a single-stage PFC boost bridge converter. Proc. IEEE India Conference, Gujarat, India. pp. 1-6.

[6] Hui T.S., Basu K.P. and Subbiah V. 2008. Permanent magnet brushless motor control techniques. Proc. IEEE National Power Engineering Conference, Bangi, Malaysia. pp. 133-138.

[7] Thirusakthimurugan P., and Dananjayan P. 2006. A new control scheme for the speed control of PMBLDC motor drive. Proc. IEEE International Conference on Control, Automation, Robotics and Vision, Singapore. pp. 1-5.

[8] Puttaswamy C.L., Singh B., Singh B.P. 1995. Investigations on dynamic behavior of permanent magnet brushless DC motor drive. Electrical Machines and Power Systems. 23(6): 689-701.

[9] Bianchi N., Bolognani S., Jang J.H. and Sul S. 2007. Comparison of PM motor structures and sensorless

control techniques for zero-speed rotor position detection. IEEE Trans. on Power Electronics, 22, pp. 2466-2475.

[10] Umayal C. and Rama Reddy S. 2013. Implementation of closed loop controlled PFC Cuk converter fed PMBLDC motor in mining applications. International Review on Modelling and Simulations. 6: 1088-1096.

[11] Umayal C. and Reddy S.R. 2014. Embedded controlled power factor correction zeta converter fed permanent magnet brushless DC motor for mining applications. Australian Journal of Electrical and Electronics Engineering. 11: 226-238.

[12] Vashist B. and Bhim Singh. 2015. PFC Cuk Converter-Fed BLDC Motor Drive. IEEE Trans on Power Electronics. 30(2): 871-887.

[13] Bhim S., Vashist B., Ambrish C. and Kamal Al-Haddad. 2014. Power Factor Correction in Bridgeless-Luo Converter-fed BLDC Motor Drive. IEEE Trans on Industrial Applications. 50(2): 1179-1188.

[14] Bhim S. and Vashist B. 2015. A BL-CSC Converter-Fed BLDC Motor Drive with Power Factor Correction. IEEE Trans on Industrial Elec. 62(1): 172-183.

[15] Tsai H.Y., Hsia T. and Chen D. 2007. A novel soft-switching bridgeless power factor correction circuit. IEEE European Conference on Power Electronics and Applications, Aalborg, Denmark. pp. 1-10.

[16] Lu B., Brown R. and Soldano M. 2005. Bridgeless PFC implementation using one cycle control technique. Applied Power Electronics Conference and Exposition, Austin, Texas. pp. 812-817.

[17] Choi W.Y., Kwon J., Kim E., Lee J. and Kwon B. 2007. Bridgeless boost rectifier with low conduction losses and reduced diode reverse-recovery problems. IEEE Trans on Industrial Elec. 54: 769-780.