VOL. 12, NO. 4, FEBRUARY 2017 ISSN 1819-6608
ARPN Journal of Engineering and Applied Sciences

www.arpnjournals.com

THE DEVELOPMENT OF SUBSYSTEM OF ACCOMMODATION TO FAULTS FOR DEAD RECKONING SYSTEM OF AUTONOMOUS UNDERWATER VEHICLES

Vladimir Filaretov[1], Alexey Zhirabok[2], Alexander Zuev[1] and Alexander Procenko[2]
[1]Institute of Automation and Control Processes FEB RAS, Vladivostok, Russia
[2]Far Eastern Federal University, Suhanova St., Vladivostok, Russia
pro293133@gmail.com

ABSTRACT

This paper is dedicated to developing of new method of synthesis of subsystem of accommodation to continuous faults for dead reckoning system (DRS) of autonomous underwater vehicles (AUV). Proposed method consists of three basic stages. On the first step, the problem of detection and localization of faults through the use of kinematic model of AUV and special data fusion from its navigation sensors is solved. On the second stage, the task of identification of fault values is solved by the introduction of additional observers with feedback by residual signals. In the third stage additional signals, compensating the faults are formed in the respective control channels of AUV. The advantage of proposed method is simplicity of realization and high precision of compensation of the revealed faults in the conditions of uncertainty and essential variability of parameters of environment. The results of mathematical simulation is fully confirmed the efficiency and high performance of the proposed method.

Keywords: accommodation, faults, AUV, navigation sensors.

INTRODUCTION

Today, the AUV are one of the most effective tools for study and development of the oceans. The navigation sensors are very important components of AUV, because its signals are used to generate trajectories of AUV. Usually, the basis of the navigation system of AUV is dead reckoning system (DRS), which includes navigation sensors. Since the faults or malfunction of these sensors can lead to errors in the implementation of underwater mission or to loss of expensive AUV, the task of timely faults detection is important. In case of faults arising, the diagnostic system should send information about detected faults to control system of AUV that should decide to stop the mission or to continue with by using special correction of control signals (case of fault tolerant control). Forming of such signals is an important part of increasing reliability problem. The solution to this task is called the accommodation of faults [1].

Now, the several approaches to solving the problems of diagnosing and fault tolerant control for AUV sensors is known [2-6]. These approaches and methods are based on using of diagnostic observers synthesized with the help of nonlinear dynamical model of AUV. Each of such observers receives control signals and the information about measured components of the AUV state vector. At this, diagnosis is carried out by using analysis of error signals (residuals) arising between the sensor output and outputs of respective observers.

The analysis showed, that most of these known approaches and methods provide a qualitative solution of problems of diagnosis and synthesis of fault tolerant control only in case of AUV movement in the plane and on the low speed. It is related to using in the synthesis of diagnostic observers nonlinear dynamic models of AUV. Such models have undefined and significantly variable parameters. This results in a non-zero residuals generated by observers, even in the absence of faults.

Various methods of robust diagnosing of AUV subsystems is used to effectively eliminate of noted disadvantage. These methods are based on sliding observers [10], neural networks [11], fuzzy logic [12], and others. There are also different methods of fault tolerant control, which are based on methods of optimal control [13], H_inf - optimization [14], tracking of reference model [15], and adaptive control [16]. These methods provide the reducing of sensitivity of synthesized observers to unknown (mostly a slowly changing) parameters of diagnosed objects. At the same time, the complexity of practical implementation of many adaptive systems of diagnosis and fault tolerant control for AUV is big problem.

Thus, problem of development of easily implementable subsystems of accommodation to faults for DRS of AUV without use of non-linear equations of dynamics, containing variable and undetermined parameters, remains important. In this paper the new synthesis method for high-quality subsystem of accommodation to faults for DRS of AUV is proposed and investigated.

The development of subsystem of accommodation to faults for DRS of AUV

In the course of development of synthesis method of fault tolerant systems for autonomous underwater robots with navigation sensors failures at first it is necessary determine the composition of navigation sensors of AUV and the relationship between signals coming from them. These relationships should be used for the synthesis of diagnostic observers for the detection and localization of occurring faults.

The set of onboard navigation sensors of AUV depends on its type and appointment. The most underwater vehicles, intended for autonomous

performance of various missions have the following set of navigation sensors [6].

The Doppler speed log, which is measure the linear speeds $[v_x, v_y]$ of AUV in joint coordinate system (JCS).

The sensor of orientation of AUV $[\varphi, \theta, \psi]$ that measure angles of course roll and trim in absolute coordinate system (ACS).

The hydroacoustic navigation system that measure the linear coordinates of AUV $[x, y]$ in ACS.

The sensor of depth of AUV, measuring coordinate of z in ACS.

The sensors of angular speeds of AUV $[\omega_x, \omega_y, \omega_z]$ concerning JCS.

There are some different causes leading to these sensors fault [2]. The faulty sensor should be early detected and isolated by the diagnostic system to avoid the erroneous mission fulfillment or loss of AUV.

All of these sensors will be used to develop a method of fault tolerant control. Connection between the values of the corresponding signals in the JCS and ACS is described by the following expression [6]:

$$\dot{\eta} = J(\eta)\upsilon, \tag{1}$$

where $\upsilon = [v_x, v_y, v_z, \omega_x, \omega_y, \omega_z]^{\mathrm{T}}$ is a vector of projections of the linear and angular speeds of AUV on the axis of JCS, $\eta = [x, y, z, \varphi, \theta, \psi]^{\mathrm{T}}$ is a vector of position and orientation AUV in ACS, $J(\eta)$ is a block matrix of transition from JCS to ACS [6]:

$$J(\eta) = \left[\begin{array}{c|c} J_1(\eta) & 0 \\ \hline 0 & J_2(\eta) \end{array}\right], \tag{2}$$

where

$$J_1(\eta) = \begin{bmatrix} \cos\psi\cos\theta & \begin{array}{c}-\sin\psi\cos\varphi - \\ -\cos\psi\sin\theta\sin\varphi\end{array} & \begin{array}{c}\sin\psi\sin\varphi + \\ +\cos\psi\cos\varphi\sin\theta\end{array} \\ \sin\psi\cos\theta & \begin{array}{c}\cos\psi\cos\varphi + \\ +\sin\varphi\sin\theta\sin\psi\end{array} & \begin{array}{c}-\cos\psi\sin\varphi + \\ +\sin\theta\sin\psi\cos\varphi\end{array} \\ -\sin\theta & \cos\theta\sin\varphi & \cos\theta\cos\varphi \end{bmatrix},$$

$$J_2(\eta) = \begin{bmatrix} 1 & \sin\varphi\tan\theta & \cos\varphi\tan\theta \\ 0 & \cos\varphi & -\sin\varphi \\ 0 & \dfrac{\sin\varphi}{\cos\theta} & \dfrac{\cos\varphi}{\cos\theta} \end{bmatrix}.$$

The proposed synthesis method of subsystem of accommodation to faults for DRS of AUV includes three main phases. In the first step, the bank of diagnostic observers is constructed for detecting and locating faults using the equations of AUV kinematics and navigational sensors data fusion. At the second stage, the task of identification of fault values is solved by the introduction of additional observers with feedback by residual signals. In the third stage additional signals, parrying the faults are formed in the respective control channels of AUV. Consider all three phases of the proposed approach in more detail.

For the purpose of diagnosis and localization of faults occurring in the sensors of DRS of AUV, it is necessary to introduce bank of observers O_1-O_5, which is described by next equations [7, 8]

$$\begin{aligned}
&O_1:\ \dot{\bar{x}} = J_{11}(\tilde{\theta},\tilde{\psi})\tilde{v}_x + J_{12}(\tilde{\varphi},\tilde{\theta},\tilde{\psi})\tilde{v}_y + J_{13}(\tilde{\varphi},\tilde{\theta},\tilde{\psi})\tilde{v}_z,\\
&O_2:\ \dot{\bar{y}} = J_{21}(\tilde{\theta},\tilde{\psi})\tilde{v}_x + J_{22}(\tilde{\varphi},\tilde{\theta},\tilde{\psi})\tilde{v}_y + J_{23}(\tilde{\varphi},\tilde{\theta},\tilde{\psi})\tilde{v}_z,\\
&O_3:\ \dot{\bar{\varphi}} = \tilde{\omega}_x + J_{45}(\tilde{\varphi},\tilde{\theta})\tilde{\omega}_y + J_{46}(\tilde{\varphi},\tilde{\theta})\tilde{\omega}_z,\\
&O_4:\ \dot{\bar{\theta}} = J_{55}(\tilde{\varphi})\tilde{\omega}_y + J_{56}(\tilde{\varphi})\tilde{\omega}_z,\\
&O_5:\ \dot{\bar{\psi}} = J_{65}(\tilde{\varphi},\tilde{\theta})\tilde{\omega}_y + J_{66}(\tilde{\varphi},\tilde{\theta})\tilde{\omega}_z,
\end{aligned} \tag{3}$$

where $[\bar{x}, \bar{y}, \bar{\varphi}, \bar{\theta}, \bar{\psi}]^{\mathrm{T}}$ is a state vector of bank of observers; the symbol "~" denotes the signals received from DRS of AUV, which may contain faults; $\tilde{v}_z = \dfrac{\dot{\tilde{z}} - J_{31}(\tilde{\theta})\tilde{v}_x - J_{32}(\tilde{\varphi},\tilde{\theta},\tilde{\psi})\tilde{v}_y}{J_{33}(\tilde{\varphi},\tilde{\theta},\tilde{\psi})}$ is a linear velocity of AUV by Z-axis in JSC; $[\tilde{\omega}_x, \tilde{\omega}_y, \tilde{\omega}_z]^{\mathrm{T}}$ is a vector of angular velocity of AUV; J_{ij} is a element of block matrix $J(\eta)$.

Using a bank of observers (1) and a special error matrix D [10], specifying the relations between the values of obtained residuals and faults that occur in the signals coming from specific sensors of DRS will detect the fact of the appearance of incorrect statements from specific sensors. In this case, the error matrix will look like the following:

$D=$

	$d\varphi$	$d\theta$	$d\psi$	dv_x	dv_y	$d\omega_x$	$d\omega_y$	$d\omega_z$
r_1	1	1	1	1	1	0	0	0
r_2	1	1	1	1	1	0	0	0
r_3	1	1	0	0	0	1	0	0
r_4	1	0	1	0	0	1	1	1
r_5	1	1	0	0	0	1	1	1

where $r = [r_1, ..., r_5]^{\mathrm{T}}$ is a residual vector between the outputs of the bank of observer and signals from the respective sensors.

In order to further localization of the faults it is necessary to introduce the vector I:

$$I = [I_1 \quad I_2 \quad \dots \quad I_5]^{\mathrm{T}},\ I_k = \begin{cases} 1, & if \quad |r_k| > r_{k0} \\ 0, & if \quad |r_k| \le r_{k0} \end{cases},$$

where r_{k0} is a value determining the threshold of sensitivity of k-th observer ($k = \overline{1,5}$).Thus, k-th element of vector of I will be equal 1 if residual of k-th observer exceed threshold value, and to zero otherwise. Next,

compare vector I and columns of faults matrix D_1 to obtain a vector $L = [L_1 \quad L_2 \quad L_3 \quad L_4 \quad L_5]^T$:

L_1=1, if I=D^1; L_2=1, if I=D^2; L_3=1, if I=D^3;

L_4=1, if I=D^4 or I=D^5; L_5=1, if I=D^6 or I=D^7 or I=D^8;

where D^l is a l-th column of matrix of error D ($l = \overline{1,8}$).

If there are no faults all elements of vector L are equal to zero. If an error occurs in determining the roll angle the 1st element in the vector L becomes equal to 1, and the rest are zero. The error in determining the course and trim, as well as the testimony of Doppler log and an angular velocity sensor correspond to the 2nd, 3rd, 4th and 5th elements of the vector L. Thus, the problem of diagnosis and localization of errors in the signals received from navigation sensors of DRS of AUV can be considered solved.

After detecting of faults, which occurring in the DRS sensors, it is necessary accurately identify magnitude of these faults in real time. The values of some faults (eg, $d\theta$ and $d\psi$) can be estimated directly from residual signals obtained, from observers O_1 and O_5 from system (1). To determine the faults in the signals received from other sensors of DRS of AUV, additional procedures, which will be discussed later, are required.

It should be noted, that equation of the observer O_3 contains coefficients that depend on φ. Therefore it is not possible to determine the magnitude of the fault $d\varphi$ directly from residual and a new observer O_1^* should be introduced, based on a joint solution of equations 3 and 4 of the system (1) (in the presence of only this fault):

$$\hat{\varphi} = \arcsin \frac{\omega_y \psi \cos\theta - \dot{\theta}\omega_z}{\omega_y^{\,2} + \omega_z^{\,2}},$$

where $\hat{\varphi}$ is state variable of the observer O_1^*. This fault value will be equal to: $d\varphi = \tilde{\varphi} - \hat{\varphi}$.

To determine the magnitude of the faults dv_x, dv_y, $d\omega_x$, $d\omega_y$ and $d\omega_z$ it is necessary to introduce the new observers O_2^* - O_6^*, that match in form with the observers O_1 – O_5, but contain feedback formed using the residual signal [7, 8]. The observer O_1^* can be described by equation (if an error dv_x occurs when there are no faults in other sensors):

$$\dot{\hat{x}} = J_{11}(v_x + dv_x) + J_{12}v_y + J_{13}v_z + k_1\hat{r}_1, \tag{4}$$

where $\hat{x}$ is a state variable this of the observer, k_1 - feedback gain, $\hat{r}_1 = x - \hat{x}$ - residual of the observer O_1^*.

With taking into account expressions (3) and (4), it is possible to obtain:

$$\begin{aligned}\dot{\hat{r}}_1 &= \dot{x} - \dot{\hat{x}} = J_{11}v_x + J_{12}v_y + J_{13}v_z - J_{11}(v_x + dv_x) - \\ &- J_{12}v_y - J_{13}v_z - k_1\hat{r}_1 = J_{11}dv_x - k_2\hat{r}_1.\end{aligned} \tag{5}$$

In a general view the behavior of the signal $dv_x(t)$ in time can be described as:

$$dv_x(t) = ae^{j\omega t},$$

where a is a amplitude of the change of fault; ω is a frequency of the change of fault; j – the imaginary unit.

Thus, the solution of the equation (5) has the form:

$$\hat{r}_1(t) = C_1 e^{-k_2 t} + \frac{-J_{11}a}{\sqrt{k_1^{\,2} + \omega^2}} e^{j\omega t + \phi}. \tag{6}$$

where $\phi = arctg\ (\omega / k_2)$, C_1 – constant.

If $k_1 >> \omega$ (this is true in most real systems), the expression (6) can be rewritten as [7, 8]:

$$\hat{r}_1(t) = C_1 e^{-k_2 t} - \frac{J_{11}dv_x}{k_1}.$$

It is known that it is desirable to choose $k = 3/T_C$, where T_C is a time at which the residual signals reach ±5% area of the required quantity. After the end of the transition process, the size of fault can be obtained from the following expression:

$$dv_x = -\frac{\hat{r}_1(t)k_1}{J_{11}}.$$

The values of the remaining faults are determined in a similar manner.

Thus, after the introduction of new observers O_1^* - O_5^* problem of estimating the faults occurring in all navigation sensors of DRS of AUV has been resolved.

In the third phase of synthesis of subsystem of accommodation to faults for DRS of AUV additional signals are generated in the control systems of AUV to eliminate faults. To solve this problem the vector of calculated fault values R is used:

$$R = [L_1 d\varphi \quad L_2 d\theta \quad L_3 d\psi \quad L_4 dv_x \quad L_4 dv_y \quad L_5 d\omega_x \quad L_5 d\omega_y \quad L_5 d\omega_z]^T.$$

In the event of a fault d_l, in the output of the diagnosis system, there will be vector R, where the l-th element is equal to the size of the fault, and the rest are zero. In the absence of faults in all elements of the vector will be zero. Thus, the second stage of the synthesis of fault tolerant system (a definition of faults size) can be considered solved. The final step is to obtain estimates of

the true values of the state vector that is necessary for quality control [7]:

$$[\varphi,\theta,\psi]=[\tilde{\varphi}-R_1,\tilde{\theta}-R_2,\tilde{\psi}-R_3],$$
$$[v_x,v_y]=[\tilde{v}_x-R_4,\tilde{v}_y-R_5],$$
$$[\omega_x,\omega_y,\omega_z]=[\tilde{\omega}_x-R_6,\tilde{\omega}_y-R_7,\tilde{\omega}_z-R_8].$$

The developed system allows determining, locating and calculating the size of the faults that occur in the navigation sensors of DRS of AUV. Block diagram of the synthesized system of accommodation is shown in Figure-1.

On Figure-1 the following designations are entered: FPS is a block of forming program signals, FL is a block of faults localization, FS is a block of determining the size of fault, CS is a control system.

The advantage of proposed method is simplicity of realization and high precision of compensation of the revealed faults in the conditions of uncertainty and essential variability of parameters of environment.

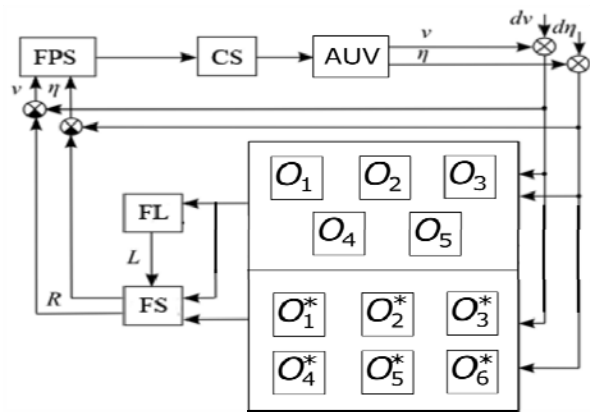

Figure-1. Block diagram of the AUV with system of accommodation.

SIMULATION OF SUBSYSTEM OF ACCOMMODATION TO FAULTS FOR DRS OF AUV

To investigate the performance and effectiveness of the proposed synthesis method, mathematical simulations were performed. The full dynamic model of underwater vehicle with adaptive control [9] was used. The simulation was done with zero initial conditions of AUV and observers. Faults in the sensors were simulated by adding a $dv_y = 0.5\sin(t)+0.25$, to sensor signal which began at time $t = 20$ s until $t = 80$ s.

Figure-2 shows the results of the work of diagnostic system, which allows to carry out real-time diagnostics procedure of AUV faulty sensors, and accurately determine the value of arising faults (errors). In this figure, line 1 indicates the value of a given fault and line 2 indicates the value of fault, obtained using the diagnostic system discussed in the article.

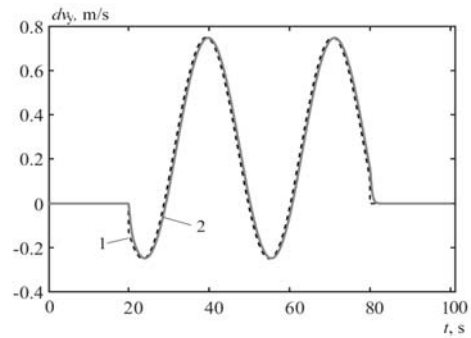

Figure-2. The value of the error dv_y, defined by diagnosis algorithm when $dv_y = 0.5\sin(t)+0.25$.

It is shown from the Figure-2 that synthesized subsystem of accommodation to faults for DRS of AUV not only discovered the fault, but also maintain the required accuracy. Similar results were obtained in the simulation cases of other types and values of faults in other sensors.

Figure-3 and Figure-4 shows AUV specified trajectory, when fault is present and the trajectory, when fault compensated by fault tolerant system. On this figures 1 is a specified trajectory, 2 is a trajectory when fault is present, 3 is a trajectory with the fault tolerant control system, 4 is a point of introduction of fault.

Thus, the results of mathematical simulation is fully confirmed the efficiency and high performance of the proposed method of synthesis of subsystem of accommodation to faults for DRS of AUV.

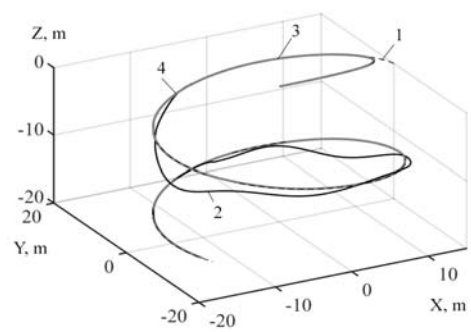

(a)

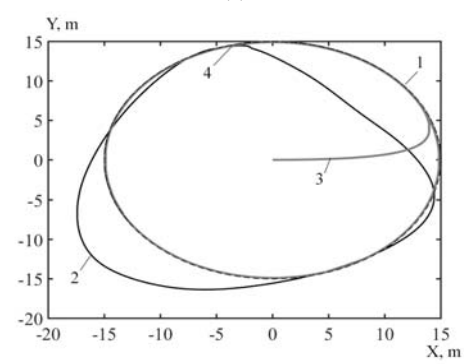

(b)

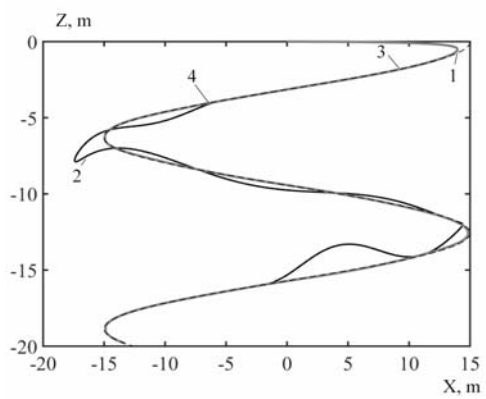

(c)

Figure-3. *a*) - The spatial trajectory of AUV; ***b*) -** the trajectory of AUV in the XY plane; ***c*) -** the trajectory of AUV in the XZ plane;

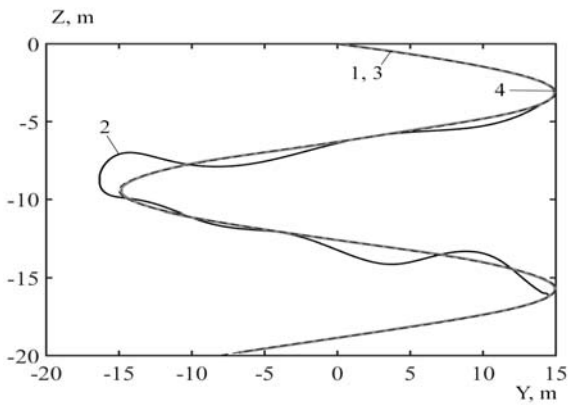

Figure-4. The trajectory of AUV in the YZ plane.

CONCLUSIONS

In this paper, the new synthesis method of subsystem of accommodation to faults for dead reckoning system of autonomous underwater vehicles is proposed and investigated. This method consists of three main stages. The problem of detection and localization of faults is solved on the first stage. The problem of faults size identification is solved at the second stage. At the third stage, there is a formation of additional control signals for AUV guaranteeing the compensating of the arising faults.
The advantage of proposed method is simplicity of realization and high precision of compensation of the faults in the conditions of uncertainty and essential variability of parameters of environment. The results of simulation confirm the high efficiency of the synthesized system of accommodation.

ACKNOWLEDGEMENTS

This Research was supported by grants of President of Russia (MK-8536.2016.8).

REFERENCES

[1] M. Blanke, M. Kinnaert, J. Lunze, M. Staroswiecki. 2003. Diagnosis and Fault Tolerant Control. Springer-Verlag.

[2] A. Pisarets, A. Zhirabok. 2002. Navigation-piloting sensor fault diagnosis in autonomous under-water vehicles. Proc. Int. Conf. ISOP PACOMS. Korea. Daejeon. pp. 70-74.

[3] G. Antonelli, F. Caccavale, C. Sansone, L. Villani. 2004. Fault diagnosis for AUVs using support vector machines. Proceedings of IEEE International Conference on Robotics and Automation. vol. 5. pp. 4486 – 4491.

[4] A. Alessandri, M. Caccia, G. Verruggio. 1998. A Model-Based Approach to Fault Diagnosis in Unmanned Underwater Vehicles. Proceedings of Oceans. Nice. France. pp. 825–829.

[5] G. Antonelli. 2003. A Survey of Fault Detection/Tolerance Strategies for AUVs and ROVs. Springer Tracts in Advanced Robotics. vol. 1. pp. 109-127.

[6] Fossen, T.I. 1994. Guidance and control of ocean vehicles. John Wiley & Sons Ltd.

[7] V.Filaretov, A.Zhirabok, A.Zuev, A.Protcenko. 2014. The new approach for synthesis of diagnostic system for navigation sensors of underwater vehicles. Procedia Engineering. 69. pp. 822-829.

[8] V.Filaretov, A.Zhirabok, A.Zuev, A.Protcenko. 2014. The Development of System of Accommodation to Faults of Navigation Sensors of Underwater Vehicles with Resistance to Disturbance. Proc. of 2014 14th International Conference on Control, Automation and Systems (ICCAS 2014). Korea. pp. 1548-1553.

[9] Filaretov V., D. Yukhimets. 2012. Synthesis Method of Control System for Spatial Motion of Autonomous Underwater Vehicle. International Journal of Industrial Engineering and Management (IJIEM). vol. 3. no 3. pp. 133-141.

[10] Alessandri A., Hawkinson T., Healey A.J., Veruggio G. 1999. Robust Model-Based Fault Diagnosis for Unmanned Underwater Vehicles Using Sliding Mode Observers. Proc. Int. Symposium Unmanned Untethered Submersible Technology. pp. 1-8.

[11] Deuker B., Perrier M., Amy B. 1998. Fault-Diagnosis of Subsea Robots Using Neuro-Symbolic Hybrid Systems. Proceedings of Oceans. Nice. France. pp. 830-834.

[12] Wang J. Wan L. Jiang C., Sun Y. 2011.Wavelet neural network applied to fault diagnosis of underwater vehicle. Proceedings of Control Conference (CCC). pp. 4301 – 4306.

[13] Staroswiecki M., Yang H., Jiang B. 2006. Progressive accommodation of aircraft actuator faults. Proc. IFAC Symp. Safeprocess'2006. Beijing. China. pp. 877–882.

[14] Weng Z., Patton R. Cui P. 2006. Active fault-tolerant control of a double inverted pendulum. Proc. IFAC Symp. Safeprocess'2006. Beijing. PR China. pp. 1591–1596.

[15] Staroswiecki M. 2005. Fault tolerant control: the pseudo inverse method revisited. Proc. 16th IFAC Congr. Prague. Czech. Republic.

[16] Jang B., Staroswiecki M., Cocquempot V. 2003. Active fault tolerant control for a class nonlinear systems. Proc. IFAC Symp. pp. 127-132.