VOL. 12, NO. 6, MARCH 2017 ISSN 1819-6608
ARPN Journal of Engineering and Applied Sciences

www.arpnjournals.com

QUASI-STATIC MODELING OF SPUR GEAR TIME VARYING STRENGTH ANALYSIS

M. R. Lias[1], Z. Sharif[1], M. Awang[2], A. Jailani[1] and H. Warap[1]
[1]Department of Engineering and Skills, Kolej Komuniti Kluang Johor, Kluang, Johor, Malaysia
[2]Department of Mechanical, Faculty of Engineering, Universiti Teknologi Petronas, Tronoh, Perak, Malaysia
E-Mail: mohdrizal.lias@kkkluang.edu.my

ABSTRACT

Measurement of gear tooth strength is important procedures in a preliminaries gear design. Two components of spur gear time-varying strength known as tooth surface contact stress (TSCS) and tooth root bending stress (TRBS) can be evaluated using an analytical or finite-element method (FEM). With the advent of computerization era; many researchers turned to finite-element modeling as the important tool in gearing studies. Two different modeling approach commonly used was based on static or dynamics application to the finite-element solution. Both solution are capable to offer several output results and interpretation. However, the complexities of the gear tooth may cause the modeling to imperfect zone of assumption. Therefore, the main aim of this study is to develop a new simple quasi-static modeling based on ANSYS Workbench. The objective was to conduct the analysis of time-varying strength of the spur gear system and compare to the analytical equations. The critical location (CL) for each strength property was also investigated. As the result, the proposed modeling was in a good agreement to the analytical model and reliable to conduct the spur gear time-varying strength analysis.

Keywords: time varying strength; quasi-static, finite element modelling, TSCS, TRBS, CL.

INTRODUCTION

Gear is fundamental components, which was used for about 3000 years to transmit power in rotating machines. As the time change, modern industry use gears as their design properties, compactness with high torque-to weight ratios. As cyclic nature of the gear function, the gear tooth is always subjected to the change of contact tooth pairs to the line of action (LOA) in their meshing position. This function causes tooth surface contact stress (TSCS) and the tooth root bending stress (TRBS) varies periodically with time. These are two major causes of gear tooth failures. TSCS leads to gear surface failure while TRBS will lead to total breakage of the gear tooth. Thus it is vital to calculate these parameters as accurately as possible.

Preliminaries design of a gear system is based on their tooth strength. It is often estimated using empirical standard such as AGMA and ISO. However, this standards province only general guidance of design method. This is happened mainly causes by the time varying natures of gear engagement with complexities' tooth geometries limited analytical method to the imperfects' zone of assumption. Advanced computational models are often required to arrive at preliminaries designs to satisfying these stated functions. Furthermore, the introduction of some empirical values for rating factors sometimes overly conservatives, reduces the computation accuracy of these standards. Therefore, with the advent of computerization era; many researchers turned to finite element modeling as the reliable tool for the tooth strength calculation.

Hwang *et al*. [1] used two-dimensional static FE modeling to analyse the hertzian stress of a gear pair engagement. Compared with the AGMA standard, they found the results obtained by FEM were more severe than that of the AGMA standard. Barbieri *et al*. [2] [8] presented an adaptive grid-size finite element model to perform the Loaded Tooth Contact Analysis (LTCA). Its computation accuracy was improved compared with previous methods. Patil *et al*. [3]studied the static contact stresses of helical gear pairs, by using the 3D model with the finite-element methods. Gear sets with different helical angle were analysed. They found that friction was varied along the line of action (LOA) at the point of contact. Using the finite element with dynamics simulation, the contact stresses of spur gears were also investigated by Qin and Guan [4]. The stresses near the tooth entering to the worst loading position found to be greater than the static contact conditions and thus result in low fatigue life, particularly at high speeds. Wu *et al.* [5] implemented a combination of tooth face contact with 3D FEM to investigate the contact and root stress of spur gears. In their study, a pair of spur gear was diffracted into 11 different contact positions to replicate a full engagement process. Their method provided an effective solution to contact problem in a quasi-statics modeling. An integrated finite-element analysis was also conducted Li. *et al* [6]. The complete correlation of gear pressure angle to the contact stress of the gear engagement was presented. The results were expected to enhance the technology of gear system design.

Costopoulos and Spitas [7] investigated the gear fillet stresses by using FEM. They found that the load capacity of asymmetric gear could be increased up to 28% compared to the standard 20 involute teeth. Based on FEM method and Linear elastic fracture mechanics, Kramberger *et al*. [8] developed a computational method to calculate the root stress of gear teeth and predicted the complete service life of spur gear. S. Li [9] investigated the effect of an addendum on tooth bending strength in 2008 by using FEM. He found that the increment of the addendum can increase the number of contact teeth, then this increment can reduce equivalent bending stress at the gear root. The

effects of misalignments on machining errors, assembly errors and tooth modifications on bending strength were also analyzed by the same author with similar FEM [10].

In the above-mentioned literatures, there are two ways to evaluate the gear tooth strength, the dynamic FEM and the static FEM. The bigger disadvantage of dynamic FEM is time-consuming. If dynamic FEM is used to numerically estimate the load capacity of meshing gear pairs, the integration time step needs to be smaller. It is is also sensitive to the normal contact stiffness, penetration tolerance and mesh density. The gear contact may cause convergence difficulty due to its non-linear characteristics. The static FEM also has drawbacks because this method was based on single point estimation of the load capacity. In this case, for time-vary strength measurement, the finite-element analysis needs to be repeated at every contact point of gear pairs. Therefore, in order to avoid the repeated setup process and save computation time, scholars developed various types of program codes to analyze the time-vary strength of gear tooth. It is, however, difficult for an inexperienced researcher without sufficient ability in the use of computer language.

In this study, instead of focusing on the complex programming codes, the strength property of gears (TSCS and TRBS) was investigated according to quasi-static modeling. Our attempt is to develop a simple and repeatable new simulation method based on ANSYS Workbench. The analysis was based on time-varying strength calculation of the gear tooth. Critical location (CL) for the TSCS and TRBS was also investigated and the result was presented at the end of this research.

AGMA GEAR STRENGTH CALCULATION

Tooth surface contact stress (TSCS)

With assumption that the contact pressure is based on pure bending of the short cantilever beam, elliptic distribution of stresses at tooth contact, purely align condition of gear meshing and friction between the gear contacting surfaces is not accounted in the stress equation. The AGMA contact stress equation is given a;

$$\sigma_c = C_p \sqrt{W_t K_o K_v K_s \frac{K_m C_f}{d_p b_w Y_j}} \quad (1)$$

Where;

Y_j	=	AGMA form factor
K_o	=	overload factor
K_v	=	dynamic factor
K_m	=	load distribution factor
K_s	=	size factor
W_t	=	tangential load
d_p	=	pitch circle diameter
b_w	=	mean face width
C_p	=	elastic coefficient correlated to the material
C_f	=	surface condition factor that correlate the surface of the finishing gear

Tooth root bending stress (TSCS)

In the AGMA standard, the bending stress at tooth root is calculated based on the load applied at HPSTC as shown in Figure-1, the critical section is determined by the tangential points of a parabola inscribed into the tooth profile. This parabola represents profile of the beam with uniform strength along its axis

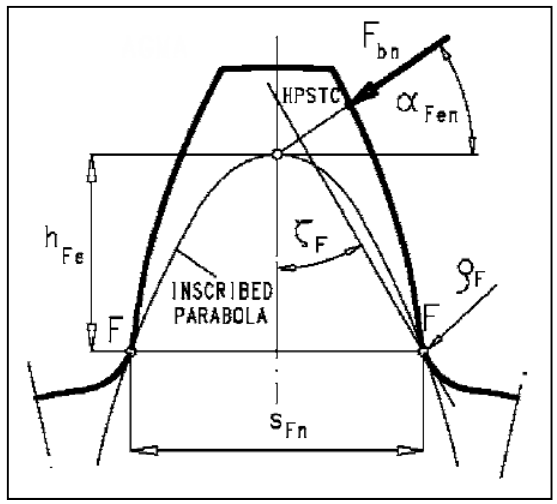

Figure-1. Static load at high point single tooth contact HPSTC determination from AGMA [11].

The AGMA equation for calculating the gear bending stress is given as[12],

$$\sigma_t = W_t K_o K_v K_s . \frac{K_H K_B}{m_t b_w Y_j} \quad (2)$$

Where, K_H is load distribution factor , K_B is rim thickness factor, m_t is transverse module, and the other factor is the same as AGMA contact stress equation.

QUASI-STATIC FEM MODELING

Finite element modelling

The creation of involute gear is an essential task which determines the accuracy of final results. For this reason, a lot of efforts have been made to program the generation of the involute curve. In this study; the geometric CAD model is constructed using Autodesk Inventor Gear Design generator. The CAD model with (.iam files format) is translated to Design Modeler compatible file (.step files) in ANSYS workbench using Automotive Design standard protocol 214. With these translation methods, parameter from the CAD .iam files is assured to have less than 0.00001mm error. The format of

the STEP-File is compatible to most of the finite-element software. ANSYS Workbench automatically locks all the length and coordinates of the gear model assembly with specified value as CAD model, which used in Autodesk Inventor. No adjustment is necessary and exact coordinate CAD system can be absolutely transferred with no parametric discrepancies or error to finite-element model.

Meshing and element selection in FE model reflect the output result analysis[13]. A new approach with customized finite-element meshing technics is developed with computationally efficient way. These technics was generic with auto Mesh Tool from ANSYS workbench platform viability to any spur gear model. It is called a slicing plane approach. It is applied by mapping the actual gear tooth solid body onto a pre-defined mesh template with several segments from an individual gear tooth consists of pinion and wheel.

A single tooth model is sliced into multiple faces that govern with structured parametric meshes for each segment. The creation of the mesh is based on the division of the segment into sub-areas. Two distinct slicing planes are created in order to separate the tooth segment into three solid parts.

$$r_o = 1/2d_p \tag{3}$$

where, r_o is the slice plane. The upper segment plane (A and B) represents the involutes curves and root fillet section. This section is one of the difficult parts in FEM meshing due to its un-symmetrical curve and fillet. Correspondingly, the middle segments are created as in intermediate partial in between the rim (C and D) and the upper segments. The main objectives of these segment (middle segment), is to create a dependencies mesh element which adjusted the possible elements and create a smooth symmetrical pattern as shown in Figure-2 (b) and Figure-3(a) The numbers of nodes on the sides of those segments represent the mesh parameters which can be defined by the user.

20-noded isoperimetric quadratic hexahedron elements, shown in Figure-3 (b) are used. Hexahedron is the analog of the 8-node "serendipity" quadrilateral. The 8 corner nodes are augmented with 12 side nodes, which are usually located at the midpoints of the sides. For elasticity applications, this element has 20 × 3 = 60 degrees of freedom. Hexahedral element is suggested by several FEM of gears due to its capability to deliver structured meshes in high quality with minimal user effort.

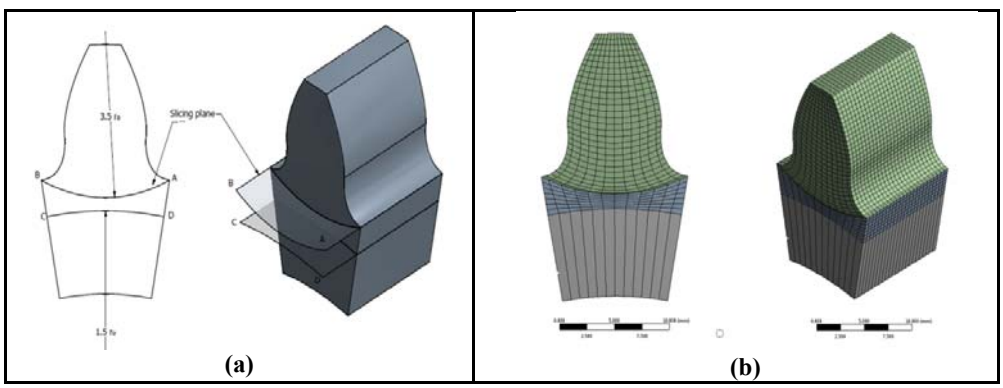

Figure-2. FEM meshing (a) Slicing plane location (b) Symettrical single tooth meshing.

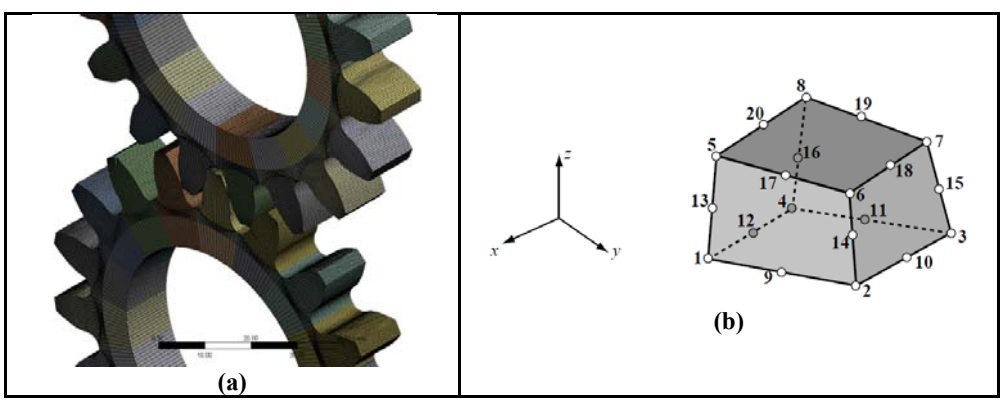

Figure-3. (a) Full gear pair FEM meshing (b) 20-noded isoperimetric hexahedron elements.

With the Pre-possessing, model is set up; other simulation properties can be assigned, such as the material definition. The gears are assumed to be manufactured with fine surface. In order to reduce the non-linearity effect in this model, it is assumed that the material properties are both homogeneous and isotropic. It is also assumed that the stress-strain relationship remains in the elastic region, such that the stresses and strains can be determined through the Young's Modulus and the Poisson's Ratio alone. Which means the values to the material properties are constant throughout the analysis.

Surface-to-surface contact was selected discretization between all generic nodes on the surface of solid contact element associated with target contact between two bodies. Projections are drawn between the master element surface (pinion) and slave element surface (gear); where each contact constraint involves a single slave node and a group of adjacent master nodes, meaning the contact direction is therefore based on the normal contact with the master surface. After the contact discretization method is selected, the next step is to create contact interaction which pairs the surfaces that come in contact with each other.

The interaction between the contacting surfaces includes the normal and tangential components. Each contact interaction can refer to a contact property that specifies the model for its contacting surfaces, as for this model; a “Hard Contact” option was applied as the normal behaviour; a “Frictionless” is added to take into account of the sliding in the tangential behaviours. Furthermore, with ANSYS-APDL algorithm, the gear model states that only the master surface(pinion) can penetrate the slave surface (wheel) between slave nodes as the surfaces come in contact when the gear in meshing engagements' position.

A quasi-static loading with three teeth gear model was used. As refer to Figure-4, loads and boundary conditions are applied to both gears through their respective local centers, where the local centers are coupled with the rest of each gear body (pinion and wheel) using a kinematic link inside of the gear-to-shaft hole. Reference center nodes M1 and M2 are defined on the pinion and wheel to transmit the motion from the center hole to the pinion tooth and from the wheel tooth to the wheel center holes through their respective rigid surfaces. This means that the nodal degrees-of-freedom (DOF) inside the gear-to-center hole for pinion are governed by the DOF of the control node at the gear wheel center. This node is constrained in all six DOF, and the rigid beam elements are connected between this node and the inside diameter of the gear and pinion. Both gears central control points are restricted to allow only rotation about their local z-axes. Where there is no rigid body motion are allowed.

At this point, the quasi-static finite-element solution is ready to begin. The magnitude of loads (torques -T) depending on the analysis time steps which applied constants through the pinion side at the stiffness portion at A and the rotation is blocked at B with the same stiffness value. All 0.6s time step with 30^0 pinion engagements position is used. Table-1 showed the engagements position with time step values for one meshing period for the models.

SIMULATION OF QUASI-STATIC MODELING

The simulation of current research was based on physical model of spur gear pair as illustrated in Figure-5. The gear was mounted onto the shaft with four supported bearing. X_P, Y_P and Z_p is the virtual forces for the pinion while X_g, Y_g and Z_g is virtual forces for the wheel respectively. The preliminaries gear design parameter is attached as Table-1.

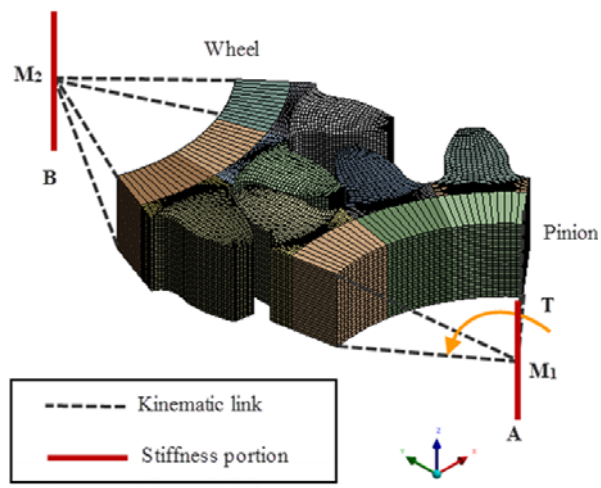

Figure-4. Quasi-static loading and boundry condition applied to the model.

ARPN Journal of Engineering and Applied Sciences

Table-1. Gear geometrical design parameter with material properties and loading.

Pinion rotation (^{0})	Time steps (s)	Engagement position
1	0.02	Double Tooth Contact (DTC)
2	0.04	DTC
3.5	0.07	DTC
5	0.1	DTC
6	0.12	DTC
7	0.14	DTC
8.5	0.17	DTC
10	0.2	DTC
11	0.22	Lowest Point Single Tooth Contact (LPSTC)
12	0.24	Single Tooth Contact (STC)
13.5	0.27	STC
15	0.3	Pitch circle diameter PCD-STC
16	0.32	STC
17	0.34	STC
18.5	0.37	STC
20	0.4	Highest Point Single Tooth Contact (HPSTC)
21	0.42	DTC
22	0.44	DTC
23.5	0.47	DTC
25	0.5	DTC
26	0.52	DTC
27	0.54	DTC
28.5	0.57	DTC
30	0.6	DTC

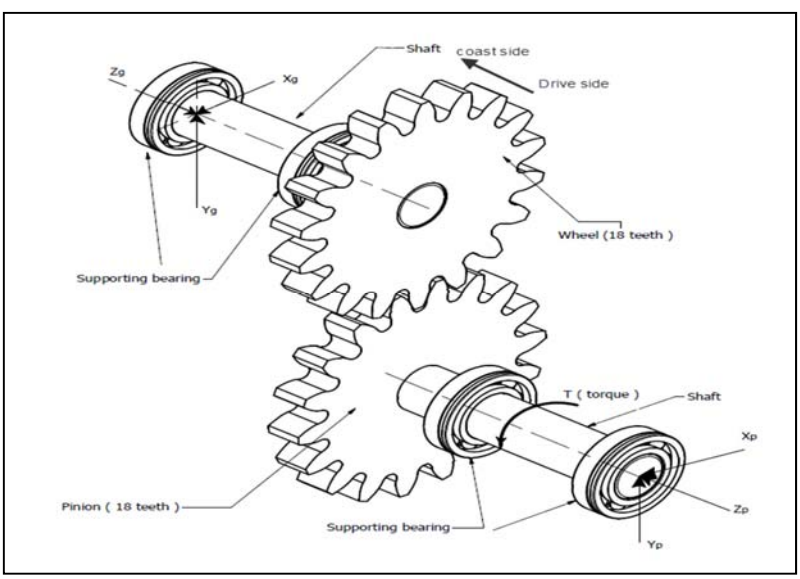

Figure-5. Physical model of a spur gear pair.

Table-2. Gear geometrical design parameter with material properties and loading.

Parameter	Symbol	Unit	Pinion	Gear
Geometry properties				
Normal Module	m_t	mm	5	
Normal Pressure Angle	α_n	degree	20^0	
Number of Teeth	z		18	18
Pitch Diameter	d_p	mm	90	90
Centre Distance	C	mm	90	
Face width	b		12	
Material properties ANSI/SAE1045[14]				
Modulus of Elasticity	E	GPa	206	
Poisson's Ratio	μ		0.300	
Density	ρ	kg/m^3	7830	
Loading				
Torque	T	Nm	50,100,150,200,250	
Velocity	w	rad/s	0.87	

QUASI-STATIC MODELING VS AGMA COMPARISON

Tooth surface contact stress (TSCS)

TSCS is measured at the observe teeth in single mesh cycles in between the interval time engagements of the pinion. Equivalent von misses stress criterion is used as the surface contact stress value to evaluate the time-varying TSCS. Figure 6 showed the TSCS for a pinion and wheel plotted as the function of pinion rotation and time-varying when the input torque is 50 Nm. From the figure, the observe tooth started to enter at 0.02s (d_{int}) move to LPSTC when 10^0 pinion rotation. At this engagement, DTC was action where the load is shared between two teeth. The range values of stress recorded is between 45.951 - 68.386 MPa.

As the engagements moved to PCD region, STC was in action. This cause the value of TSCS is increasing to a range 83-86 MPa. At this range, the worst loading condition (maximum stress) was recorded with TSCS = 86.596 MPa. From here, the engagement passing through HPSTC at time 0.4 pinion rotations 20^0. As the engagement progress, DTC again in action, which the contact force is sharing, thus reduce the TSCS to the range of 66 – 40 MPa. After this range, the engagement release and single mesh cycle is complete, which the next tooth continued the same cycles.

AGMA contact formulation was based on maximum contact stress happened when the tooth is in action [15]. Thus, for this result, the torque which is a function of force is plotted against TSCS and compared with the AGMA contact stress model. Figure-7 showed a maximum TSCS in different torque condition applied to quasi-static FEM model and AGMA formulation.

From the figures, observes that TSCS obtained by quasi-static FEM and AGMA formulation showing similar trending to increase exponentially towards the end of the torque applied, 300 Nm. It is noticed that, TSCS according to current model is slightly higher compare to AGMA model. For example, at 50 Nm torque, TSCS with quasi-static FEM 86.93 MPa, while AGMA showed 71.2 MPa. These are 7.8% different, which considered very small. Known that, AGMA contact analytical formulation is based on modification of hertzian model with two contacts cylinder in pressure. However, hertzian formulation is proof to be over really conservative and un-realistic to simulate in between tooth surface of the gears[12]. Hence, AGMA contact formulation is much more preferred by many gear designers [14] . On the other hands, quasi-static FEM model shows a similar trending with AGMA (less than 8% different), indicates that the verification of this model is acceptable for discussion of TSCS.

Critical location (CL) of TSCS is determined by the node number where maximum TSCS is recorded in between one mesh cycles of pinion and wheel. Figure 8(a) and Figure 8(b) showed CL happened for a pinion. In this case, CL is happened at node 29501 where the max TSCS is 86.594 MPa. This node is located at the edge in the drive side of pinion contact surface, which is slightly above the pitch line of the tooth.

As for the wheel, the CL is happened at node 172675 with max. TSCS = 83.172 MPa which also located at the edge (coast side) slightly below PCD line of the wheel contact surface. A few researchers describe a contact surface CL for align gear pair FE model should happen in the middle of their face width. As the contact line of Action (LOA) is assumed to be perfect, the TSCS should remain constant for one mesh cycles, hence the CL should have happened in the center of the contact face with. However, the edge stiffening effect, with many others geometrical discontinuities happened may causes shifted of the CL. Correspondingly, fairly to say that CL is totally depending on the TSCS of the gear engagements.

Tooth root bending stress (TRBS)

TRBS is measured over the flanks area of the observe tooth for single mesh cycles of the gears. Figure 9 showed the time-varying TRBS for a single mesh cycle of the gear system at T = 50 Nm for the pinion and wheel. At first, engagement (dint), TRBS values for the wheel is

higher than the pinion. This is where the load is shared between the teeth where the DTC is in action. When the engagement continued to LPSTC at 100, TSCS is still in the same pattern as the wheel with 42.510 MPa higher and the pinion 35.376 MPa

The worst loading position is recorded for the wheel at (t = 0. 22s, 100) with stress values 54.127. MPa. As the engagement moves to 0.3s at pitch line, the pattern switch and the pinion TRBS showed higher values than the wheel. At between these times, the worst loading position of the pinion is recorded (t = 18.5s, 18.50s) at 54.2 MPa. The engagement continues passes HPSTC where the load function is changing from STC to DTC again. Between this time (0.4s-0.6s) the range of stress recorded was (32.5 MPa - 14.6 MPa) respectively, before the mesh cycles complete and the tooth disengagement. Notice that the maximum stress is happened when the mesh cycles passing through at the worst loading position located at the upper the tooth pitch line. Maximum TRBS is higher for the pinion compared to the wheel. At severe of time, these stresses keeps fluctuating as the nature of gear function, thus will fail the pinion first before the wheel.

Figure-10 shows the TRBS calculation using quasi-static FEM model to AGMA in varies torque values from 50 to 300 Nm. Designed of the gear system is depended on its pinion strengths[15]. Thus, these comparisons are based on the pinion TRBS. Results obtained from quasi-static FEM model seem a bit lower compare to the AGMA.

However, the trending of the maximum TRBS is proportionally increased to the torque had put an agreement for both models. As AGMA state the loading affected at the HPSTC location as Figure-2, while quasi-static FEM used the maximum stress happened at the worst loading position in one mesh cycles, which is more realistic in gear pair engagement. However, these slightly different which only less that 10% is acceptable as to conclude that quasi-static fem is adequate to evaluate the strength of the gear pair

In order to define the absolute CL of TRBS, the contour plot is presented as Figure-11 (a) and Figure-11(b). From the figure, it clearly seen that CL for both gear (pinion and wheel) happened at middle face width node, at line drawn 30^0 perpendicular to pressure angle (20^0) which is known as hoofer's critical section. This section is expected as describe by [14], widely used in many gear design handbooks to calculated the maximum bending stress of the tooth.

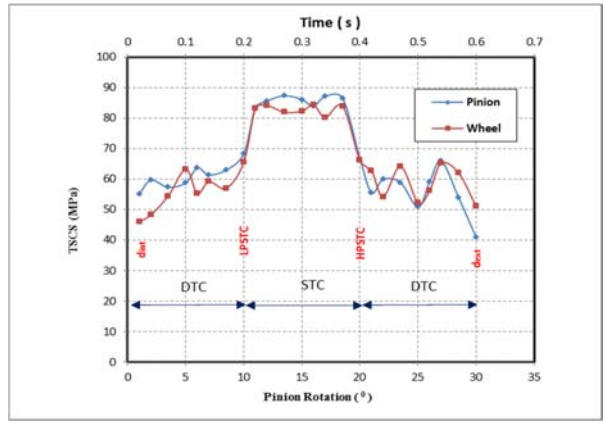

Figure-6. Time-varying TSCS for a single mesh cycles of the gear system at T = 50 Nm.

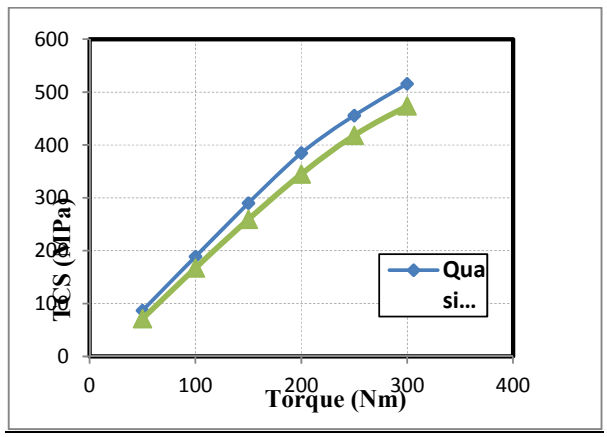

Figure-7. TSCS - Quasi-static FEM simulation compared to AGMA.

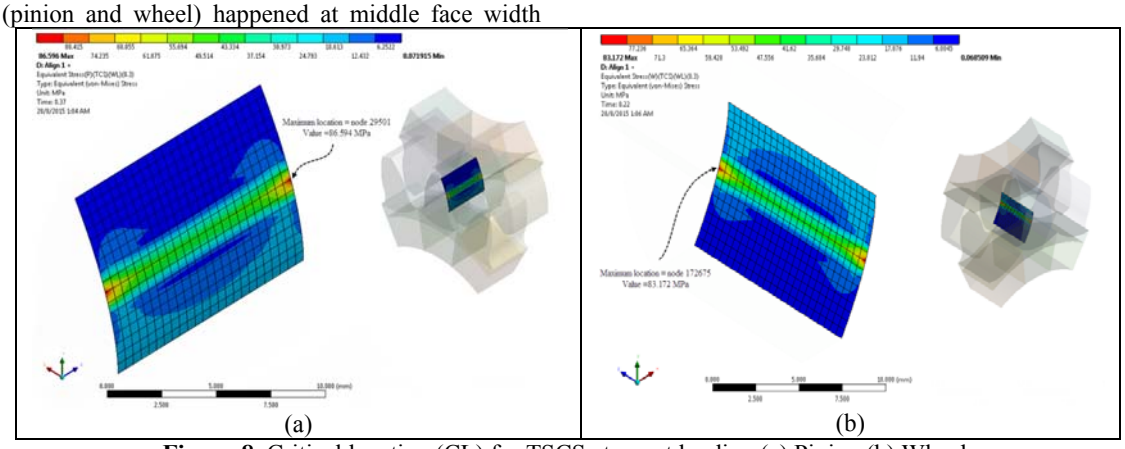

Figure-8. Critical location (CL) for TSCS at worst loading (a) Pinion (b) Wheel.

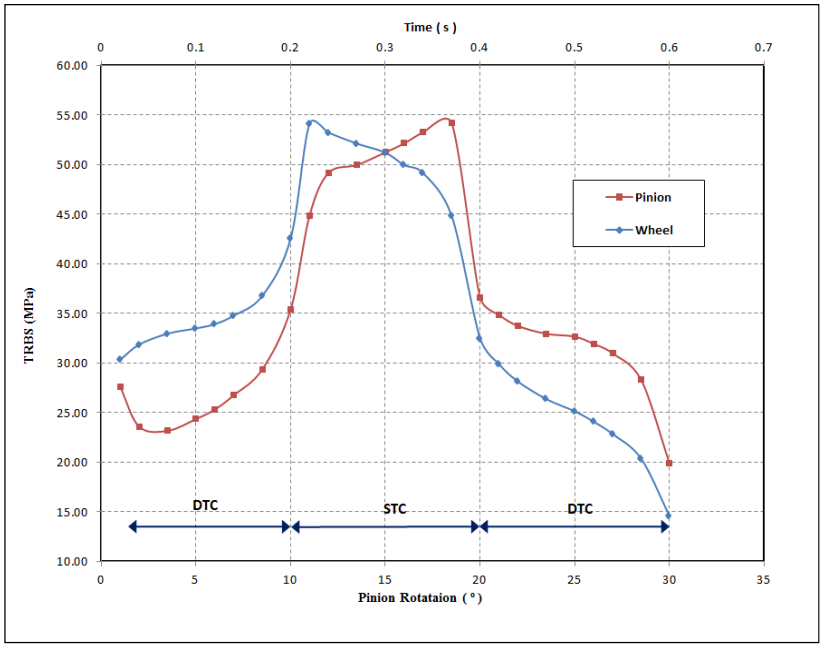

Figure-9. Time-varying TRBS for a single mesh cycles of the gear system at T = 50 Nm.

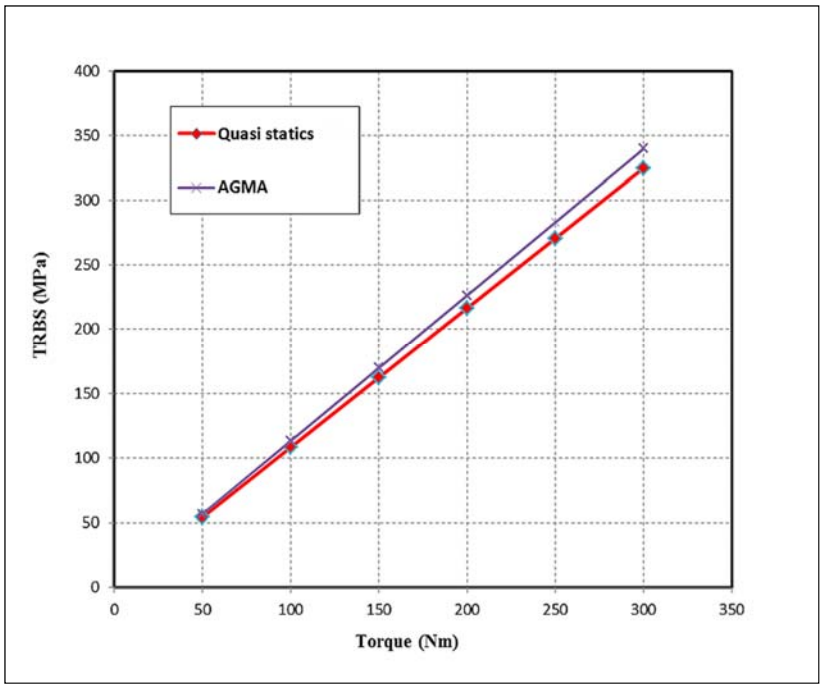

Figure-10. TRBS - Quasi-static modeling compared to AGMA with different Torque.

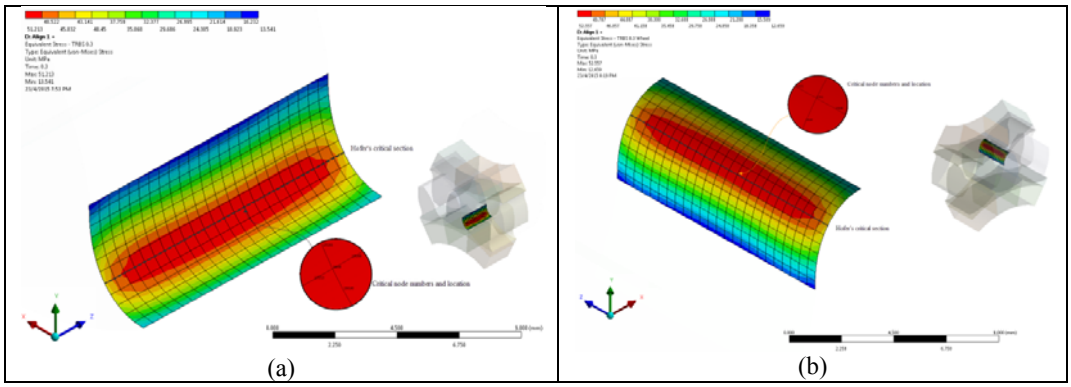

(a) (b)

Figure-11. Critical location (CL) for TRBS at worst loading (a) Pinion (b) Wheel.

CONCLUSIONS

In this study, quasi-static modelling using FEM was use to analyse the time-varying strength of gears system. The simulation was conducted with ANSYS workbench software. With accordingly, the following conclusions may be drawn:

a) The proposed quasi-static modelling can demonstrate the time-varying strength analysis of spur gears and the outputs parameter of TRBS and TSCS can be observed.
b) Critical location (CL) can be easily defined using current simulation method. This make the observation of the weakest point at the root section virtually possible in high accuracies results.
c) A good agreement in between quasi-static modelling to the AGMA formulation indicates that this method is adequate and reliable to simulate the spur gear in time varying strength analysis.

ACKNOWLEDGEMENTS

This research work is funded by ERGS-MOHE Malaysia under grant 0153AB-I14. The authors greatly appreciate the support provided by Universiti Teknologi PETRONAS and KK Kluang Johor for this research.

REFERENCES

[1] S.-C. Hwang, J.-H. Lee, D.-H. Lee, S.-H. Han, and K.-H. Lee, "Contact stress analysis for a pair of mating gears," Mathematical and Computer Modelling, vol. 57, pp. 40-49, 2013.

[2] M. Barbieri, A. Zippo, and F. Pellicano, "Adaptive grid-size finite element modeling of helical gear pairs," Mechanism and Machine Theory, vol. 82, pp. 17-32, 2014.

[3] S. S. Patil, S. Karuppanan, I. Atanasovska, and A. A. Wahab, "Contact stress analysis of helical gear pairs, including frictional coefficients," International Journal of Mechanical Sciences, vol. 85, pp. 205-211, 2014.

[4] W. Qin and C. Guan, "An investigation of contact stresses and crack initiation in spur gears based on finite element dynamics analysis," International Journal of Mechanical Sciences, vol. 83, pp. 96-103, 2014.

[5] J. S.-S. Wu, S.-L. Xu, Y.-T. Lin, W.-H. Chen, and Y.-L. Lai, "3D contact analysis of conjugate spur gears by a complete mating process," Journal of Mechanical Science and Technology, vol. 27, pp. 3787-3795, 2013.

[6] C.-H. Li, H.-S. Chiou, C. Hung, Y.-Y. Chang, and C.-C. Yen, "Integration of finite element analysis and optimum design on gear systems," Finite Elements in Analysis and Design, vol. 38, pp. 179-192, 2002.

[7] T. Costopoulos and V. Spitas, "Reduction of gear fillet stresses by using one-sided involute asymmetric teeth," Mechanism and Machine Theory, vol. 44, pp. 1524-1534, 2009.

[8] J. Kramberger, Sraml, M., Glodez, S., "Computational Model for the Analysis of Bending Fatigue in Gears," International Journal of Fatigue, vol. 82, pp. 2261-2269, 2004.

[9] S. Li, "Effect of addendum on contact strength, bending strength and basic performance parameters of a pair of spur gears," Mechanism and Machine Theory, vol. 43, pp. 1557-1584, 2008.

[10] S. Li, "Finite element analyses for contact strength and bending strength of a pair of spur gears with machining errors, assembly errors and tooth modifications," Mechanism and Machine Theory, vol. 42, pp. 88-114, 2007.

[11] A. Kawalec, J. Wiktor, and D. Ceglarek, "Comparative analysis of tooth-root strength using

ISO and AGMA standards in spur and helical gears with FEM-based verification," Journal of Mechanical Design, vol. 128, pp. 1141-1158, 2006.

[12] J. E. Shigley, Shigley's mechanical engineering design: Tata McGraw-Hill Education, 2011.

[13] Y. Hu, Y. Shao, Z. Chen, and M. J. Zuo, "Transient meshing performance of gears with different modification coefficients and helical angles using explicit dynamic FEA," Mechanical systems and signal processing, vol. 25, pp. 1786-1802, 2011.

[14] S. P. Radzevich and D. W. Dudley, Handbook of practical gear design: CRC press, 1994.

[15] L. E. Alban, Systematic analysis of gear failures: ASM International, 1985.