VOL. 12, NO. 8, APRIL 2017 ISSN 1819-6608
ARPN Journal of Engineering and Applied Sciences

www.arpnjournals.com

NUMERICAL WORKS ON 2-DIMENSIONAL AND 3-DIMENSIONAL TURNING DIFFUSER WITH BAFFLES

Nur Hazirah Binti Noha Seth[1], Norasikin Binti Mat Isa[1], Safiah Binti Othman[1] and Vijay R. Raghavan[2]
[1]Faculty of Mechanical and Manufacturing Engineering, University of Tun Hussein Onn Malaysia
[2]OYL R&D Centre Sdn. Bhd, Taman Perindustrian Bukit Rahman Putra, Sungai Buloh, Selangor, Malaysia
E-Mail: sikin@uthm.edu.my

ABSTRACT

Apart of standard diffuser, turning diffuser combine both turning and diffusing in a single system. 3-dimensional turning diffuser has more distorted flow and most likely to offer deep discussion related to flow uniformity and pressure recovery. Present study focuses on numerical approach to study flow characteristic in both 2-dimensional and 3-dimensional turning diffuser with area ratio (AR) of 2.16. Experiment to investigate the flow behaviour and performance of turning diffuser in low subsonic system were conducted previously and with the objective to improve turning diffuser performance, baffle was intorduced. To enhance the study, present work conducted simulations on the same 2-dimensional and 3-dimensional turning diffuser to find the optimum numerical model and parameters to be used when studying both turning diffuser. Realizable K-Epsilon (RKE) model was the most suitable model to be used since the result obtained closely resembles the result from experiment. Low deviations between numerical and experimental validated results conclude that the model selected were verified and other parameters input setting could be used in other numerical work related to 2-dimensional and 3-dimensional turning diffuser. Flow separation for 3-dimensional turning diffuser occurs not only at the inner wall, but at the left and right wall as well. Future study in designing baffle for 3-dimensional turning diffuser should improve these areas in order to enhance turning diffuser performance in terms of pressure recovery as well as flow uniformity.

Keywords: turning diffuser, flat plate baffle, airfoil baffle.

INTRODUCTION

The study of fluid mechanics involve with action of forces on fluids. Steady flow engineering device, like diffuser for example, is a device with the simplest design of an expanding area in the direction of the flow. With the main function of increasing the fluid static pressure by slowing it down, flow characteristic of a diffuser was studied previously [1]. Baffle configuration and placement inside a diffuser plays a vital role in determining the improved performance of diffuser [1].Over the years, researchers used their [1] studies as their main reference on developing and enhancing the study of flow in diffusers and curved (turning) diffusers. When both curved and diffusers were combined, pressure loss will be incurred [2]. This is due to interruption by the inclusion of pipe fitting such as bend onto the uniform cross section of a diffuser [2]. The study of 2-dimensional and 3-dimensional turning diffuser has been intensely done previously [3-6] using both experiment and numerical approach. Introduction of baffles were also studied previously[7-11]. Present study focuses on using numerical approach to study flow characteristic in 2-dimensional and 3-dimensional turning diffuser.

Computational domain

To prevent excessive backflow at the outlet, both 2-dimensional turning diffuser with baffle and 3-dimensional turning diffuser with baffle were extended by 10cm downstream [12, 13]. According to [12], extending downstream outlet boundary could avoid significant error when pressure at the real outlet was assigned constant. Details of the computational domain are shown in Figure-1.

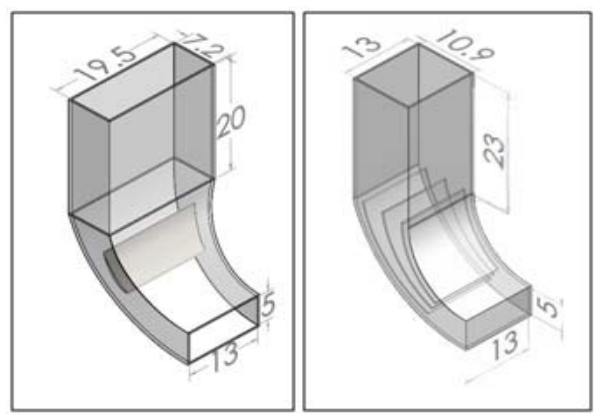

Figure-1. 3-dimensional turning diffuser (left) and 2-dimensional turning diffuser (right). All dimensions in cm

Dimensional turning diffuser

Reynolds number selected for present study was classified as turbulent internal flow. Solving turbulent boundary layer requires more effort than solving laminar boundary layer. Each wall-adjacent cell's centroid need to be placed in the sub-layer and buffer layer region of the turbulent boundary layer[14].Inflation applied to the model must base on the calculation of first layer thickness, y_p as shown in Equation 1.

$$y_p \equiv \frac{y_p^+ v}{u_\tau} \quad (1)$$

VOL. 12, NO. 8, APRIL 2017 ISSN 1819-6608
ARPN Journal of Engineering and Applied Sciences

www.arpnjournals.com

y_p = first layer thickness,
y_p^+ = for EWT, $y^+_p = 1$
υ = kinematic viscosity
u_τ = total velocity (m/s)

Since inflation were applied, Enhanced Wall Treatment (EWT) were selected as the near wall function, thus $y^+_p = 1$[14]. Calculation of total velocity, $u_\tau$follows Equation 2 involving calculation of skin friction coefficient, $\bar{c_f}$ of rectangular duct using Equation 3.

$$u_\tau = u_i\sqrt{\bar{c_f}/2} \quad (2)$$

u_i = Mean velocity (m/s)
$\bar{c_f}$ = Skin friction coefficient

$$\bar{c_f}/2 = 0.039\,Re_{in}^{-\frac{1}{4}} \quad (3)$$

Re_{in} = Reynolds number

With 5 different values of Reynolds number tested, first layer thickness for each Reynolds number is shown in Table-1. y_p=0.01mm were applied during inflation construction at the buffer layer region.As in Table-2, all three meshes were tested using Realizable K-Epsilon (RKE) turbulence model using parameters laid out in Table-3. Several studies [14, 15,and 2] have successfully predicted the flow in diffuser using K-epsilon turbulence model.

Table-1. 2-dimensional turning diffuser first layer thickness calculation.

Re	$C_f/2$	u_τ(m/s)	y_p(m)	y_p(mm)
4.570E+04	0.00267	0.527	0.0000305	0.0305
4.900E+04	0.00262	0.560	0.0000286	0.0287
7.292E+04	0.00237	0.793	0.0000202	0.0203
9.961E+04	0.00220	1.042	0.0000154	0.0154
1.122E+05	0.00213	1.157	0.0000139	0.0139

Table-2. Mesh details tested for 2-dimensional turning diffuser grid independence study.

Mesh	Nodes	Elements
Mesh 1	693201	2011609
Mesh 2	1065757	3281442
Mesh 3	1389205	4429968

Table-3. ANSYS FLUENT input parameters.

Parameters	Input
Time	Steady
Viscous Wall Treatment	Realizable K-epsilon turbulence model Enhanced Wall Treatment (EWT)
Fluid	Air
Density	1.164 kg/m3
Viscosity	1.872e-05 kg/ms^{-1}
Solid	Acrylic Plate
Density	1180 kg/m3
Velocity inlet	10.208 m/s 10.945 m/s 16.287 m/s 22.249 m/s 29.067 m/s
Pressure outlet	0 gauge pressure
Wall	No slip

Line A allocation at outlet plane of interest are shown in Figure-2. Simulations were conducted for all three meshes using RKE turbulence model and velocity profile along Line A were plotted as shown in Figure-3. Particle Image Velocimetry (PIV) results obtained from the experiment [17]was also included as comparison. According to Figure-3, similar pattern of velocity profile plot were observed between Mesh 2 and Mesh 3. This concludes that Mesh 2 and Mesh 3 were no longer grid dependence. Mesh 2 was selected as the desired mesh because it takes less computational effort to meet convergence. Velocity profile plot for all meshes also shows similar pattern with PIV velocity profile.

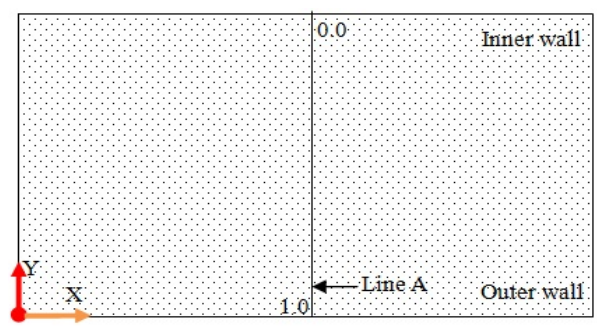

Figure-2. Outlet plane of interest and allocated position of line A.

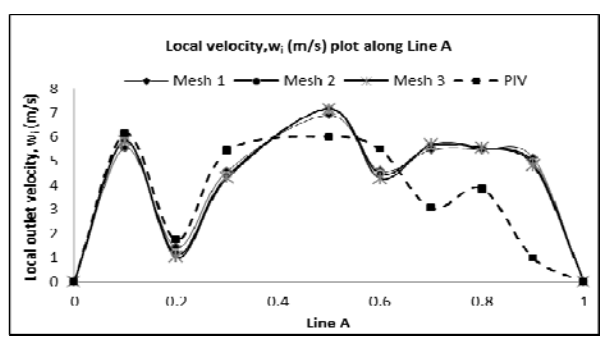

Figure-3. Velocity plot along line A for all meshes and comparison with PIV.

Other than RKE, selected Mesh 2 was used with other turbulence model such as Re-normalization Group (RNG) k-epsilon and Standard K-Epsilon (RKE). Outlet velocity plot along Line A between these model and PIV results are shown in Figure-4. Even with slight difference with one another, RKE still results with the least deviation with PIV values as shown in Figure-4. Thus, RKE was selected as the optimum turbulence model to study 2-dimensional turning diffuser with baffle. To further strengthen the selection of RKE turbulence model, results from running the simulation with various inlet Reynolds number were compared with experimental values. Mean velocities and static pressure at both inlet and outlet were compared as shown in Table-4, Table-5 and Table-6.

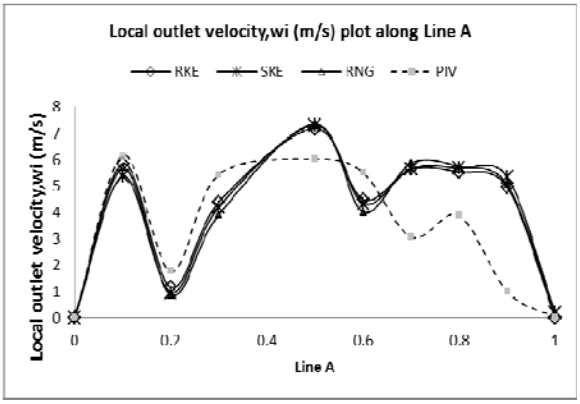

Figure-4. Velocity plot along line A for all turbulence models tested and comparison with PIV.

Table-4. Mean outlet velocity comparison.

Re_{in}	V_{exp} (m/s)	V_{CFD} (m/s)	Deviation (%)
4.57E+04	4.944	4.904	0.802
4.90E+04	5.626	5.329	5.282
7.29E+04	7.394	8.056	8.214
9.96E+04	11.215	12.405	9.595
1.12E+05	11.433	14.627	21.837

Table-5. Static pressure at inlet comparison.

Re_{in}	P_{exp}(Pa)	P_{CFD}(Pa)	Deviation (%)
4.57E+04	101306	101312	0.00592
4.90E+04	101305	101309	0.00395
7.29E+04	101255	101287	0.0316
9.96E+04	101174	101238	0.0632
1.12E+05	101049	101191	0.1403

Table-6. Static pressure at outlet comparison.

Re_{in}	P_{exp}(Pa)	P_{CFD}(Pa)	Deviation (%)
4.57E+04	101333	101324	0.00888
4.90E+04	101329	101323	0.00592
7.29E+04	101322	101321	0.000987
9.96E+04	101316	101315	0.000987
1.12E+05	101308	101309	0.000987

Mean outlet velocity, V_{mean} deviates less than 10% for all Reynolds number tested except for the highest Reynolds number, 1.12E+05. This is due to improper practice when conducting the experiment. Controlling fog generator alongside with high velocity inlet is quite challenging, thus appropriate amount of fog to be injected into the rig was hardly controlled. Results extracted from PIV might differ from the actual, which is why the deviation for the highest Reynolds number is quite high. On the other hand, static pressure at both inlet and outlet shows great similarity between simulation and experimental. RKE turbulence model has been proven to give the closest values to experimental values and deem suitable for 2-dimensional turning diffuser. It is believed that with a proper grid independence study, the same RKE turbulence model with the same input parameters can be used on 3-dimensional turning diffuser.

Dimensional turning diffuser

Study on 3-dimensional turning diffuser started with the preliminary work by [3]. After intense study, study the flow characteristic of 3-dimensional turning diffuser to measure the flow uniformity and pressure recovery [14]. The effort continues by installing baffle to the same 3-dimensional turning diffuser and run the same experiment. As depicted in the experiment, installation of baffle could improve turning diffuser performance. Flow uniformity has been improved with low deviations between the tabulated velocity outlet with mean velocity. Pressure recovery also improved when the value of C_p measured is higher than turning diffuser without baffle. Commonly 3-dimensional turning diffuser has more distorted flow due to diffusing activity in both x-y and y-z direction, hence offer wider topic up for discussion. Even so, it is believed that numerical approach for 3-dimensional turning diffuser is the same as 2-dimensional turning diffuser. Starting with grid independence study, 3-dimensional turning diffuser model were constructed using ANSYS Design Modeller and 3 different meshes was tested using RKE turbulence model. Calculation of first layer thickness for inflation insertion at buffer layer region was done as depicted in Table-7.y_p=0.01mm was selected as first layer thickness for all meshes. The selected first layer thickness was reasonable to test with all inlet Reynolds number condition. Using EWT as was function, simulation was run using FLUENT and RKE turbulence model to test all three meshes constructed as Table-8.

VOL. 12, NO. 8, APRIL 2017 ISSN 1819-6608
ARPN Journal of Engineering and Applied Sciences

www.arpnjournals.com

Table-7. 3-dimensional turning diffuser first layer thickness calculation.

Re	$C_f/2$	u_τ(m/s)	y_D(m)	y_D(mm)
4.527E+04	0.00268	0.519	0.0000309	0.031
5.110E+04	0.00260	0.577	0.0000278	0.028
7.580E+04	0.00235	0.815	0.0000197	0.019
9.950E+04	0.00220	1.035	0.0000155	0.015
1.263E+05	0.00207	1.275	0.0000126	0.013

Table-8. Mesh details tested for 3-dimensional turning diffuser grid independence study.

Mesh	Nodes	Elements
Mesh 1	611572	2711596
Mesh 2	848754	3838379
Mesh 3	988410	4622116

Inlet Reynolds number, Re=4.494E+04 with input parameters as Table-3 previously were used in FLUENT and velocity plot along Line A for all three meshes tested were compared with PIV plot. According to Figure-5, Mesh 2 and Mesh 3 agree well with each other, concluding that both meshes have reached grid independency. However, due to computational effort, Mesh 2 only will be selected to be tested with other inlet Reynolds number since it will take less time to reach convergence compared to Mesh 3.Comparison between other turbulence models tested (SKE and RNG) also shows good agreement with PIV and RKE as shown in Figure-6.

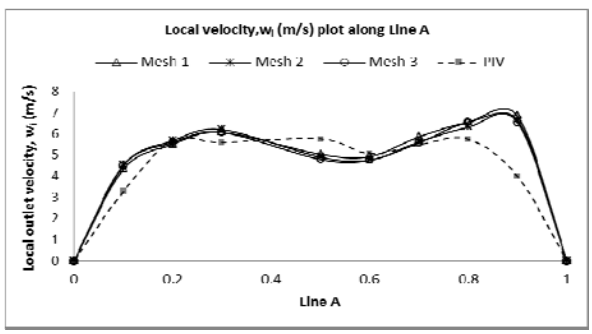

Figure-5. Velocity plot along line A for all meshes and comparison with PIV.

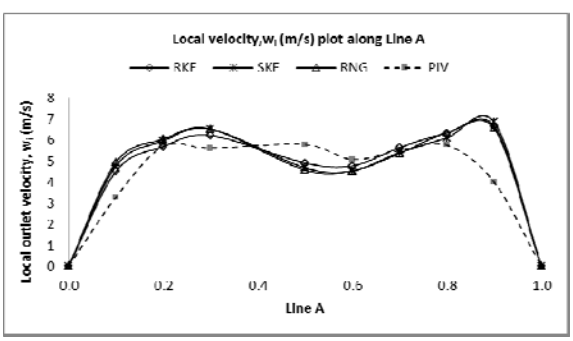

Figure-6. Velocity plot along line A for all turbulence models tested and comparison with PIV.

RKE deviates the least compared to others. Thus, RKE turbulence model is the optimum turbulence model to be used to solve both 2-dimensional and 3-dimensional turning diffuser. Other than velocity plot along Line A, velocity at point 1, were measured and compared with experimental value from PIV. Static pressure at both inlet and outlet were also compared. Details were shown in Table-9, Table-10 and Table-11. Similar values were observed with deviation less than 10% for all inlet Reynolds number tested. Both inlet and outlet static pressure shows great similarity with experimental values. This concludes the numerical solution has been validated with experimental result quantitatively.

Table-9. Velocity at point 1 comparison.

Re_{in}	$V_{1,PIV}$	$V_{1,CFD}$(m/s)	Deviation (%)
4.527E+04	4.46	4.776	7.093
5.110E+04	5.77	5.543	3.925
7.580E+04	9.35	9.004	3.839
9.950E+04	13.97	13.515	3.365
1.263E+05	16.88	16.203	4.177

Table-10. Static pressure at inlet comparison.

Re_{in}	P_{exp}(Pa)	P_{CFD}(Pa)	Deviation (%)
4.527E+04	101298	101294	0.003949
5.110E+04	101292	101284	0.007898
7.580E+04	101250	101229	0.020741
9.950E+04	101188	101154	0.033601
1.263E+05	101105	101067	0.037585

Table-11. Static pressure at outlet comparison.

Re_{in}	P_{exp}(Pa)	P_{CFD}(Pa)	Deviation (%)
4.527E+04	101314	101325	0.010856
5.110E+04	101313	101325	0.011843
7.580E+04	101300	101325	0.024673
9.950E+04	101282	101324	0.041451
1.263E+05	101261	101320	0.058231

Qualitative Analysis of Flow Structure

Numerical approach offer wider cases up for discussion. Experimental setup such as PIV for example, could only capture 1 plane at a time. Time consuming on the setup to change to other planes limits the chance of studying flow structure in turning diffuser. On the other hand, simulation work consumes time on the calculation and convergence only. End user could diversify extracted results as required and brought up for discussion. For flow in turning diffuser, flow separation at the inner wall was the setback discussed by [6]. These flaws disrupt turning diffuser performance in terms of pressure recovery and flow uniformity. Present study aims to strengthen findings which conclude that installation of baffles could reduce flow separation at the inner wall. Velocity contour from x-y plane at the middle of z-axis (Plane A) were captured. Details are shown in Figure-7 and Figure-8.

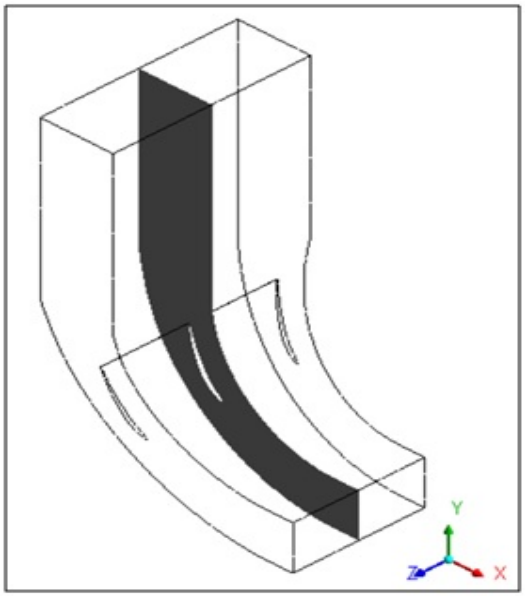

Figure-7. Plane of interest, plane A.

As shown in Figure-8, minor flow separation was observed at the inner wall. Ideally, this was supposed to be a great achievement on improving the performance of turning diffuser. Less flow separation will results in less pressure loss, thus higher pressure recovery. Less flow separation was also supposed to improve flow uniformity significantly. Table-12 laid out calculated value of pressure recovery coefficient, C_p and flow uniformity, σ_w comparison between 3-dimensional turning diffuser with and without baffle. Calculated values show improvement as compared to turning diffuser without baffle. However, the value still is not as significant as flow improvement depicted in Figure-8.

Table-12. Pressure recovery and flow uniformity obtained from experiment (Normayati *et al.*, 2014).

Re_{in}	σ_w	C_p	σ_w	C_p
	(Baffle)		(Without baffle)	
4.527E+04	1.62	0.273	1.82	0.210
5.110E+04	1.75	0.281	2.25	0.217
7.580E+04	2.09	0.304	2.7	0.203
9.950E+04	3.09	0.332	4.64	0.219
1.263E+05	3.68	0.342	5.05	0.194

3-dimensional turning diffuser flow separation occurs not only at the inner wall, but at both right and left wall. Present study added another approach on studying the flow structure in turning diffuser. Another plane was selected, namely Plane B (Figure-9). This plane covers diffusing activities at the left and right wall. With the assumption of flow structure at both left and right wall are the same, only flow structure at the left wall will be shown here, as in Figure-10.

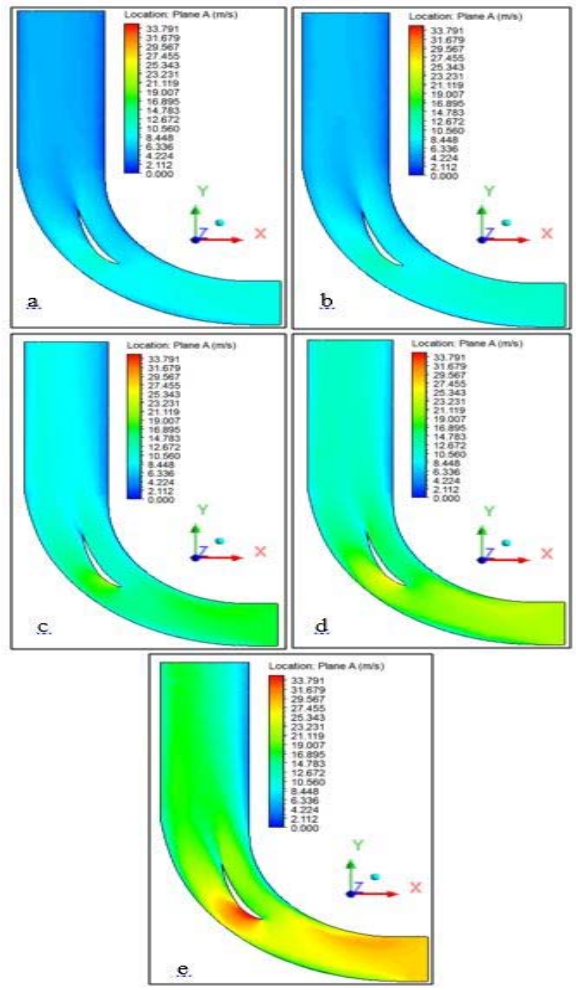

Figure-8. Flow structure at Plane A for: (a) 4.527E+04, (b) 5.110E+04, (c) 7.580E+04, (d) 9.950E+04 and (e) 1.263E+05.

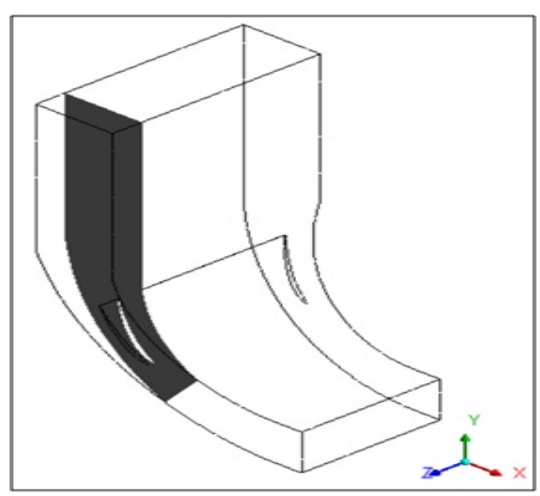

Figure-9. Plane of interest, plane B.

Referring to Figure-10, flow separation still exists at the inner wall resulting in pressure loss. This is the reason why pressure recovery coefficient, C_p measured during experimental calculation did not improve much. Flow separation at Plane B can clearly be seen indicating critical flow separation exists at both left and right wall especially at the inner wall region. This contributes to higher value of σ_w as Re_{in} increases; represent more distorted flow as Re_{in} increases.

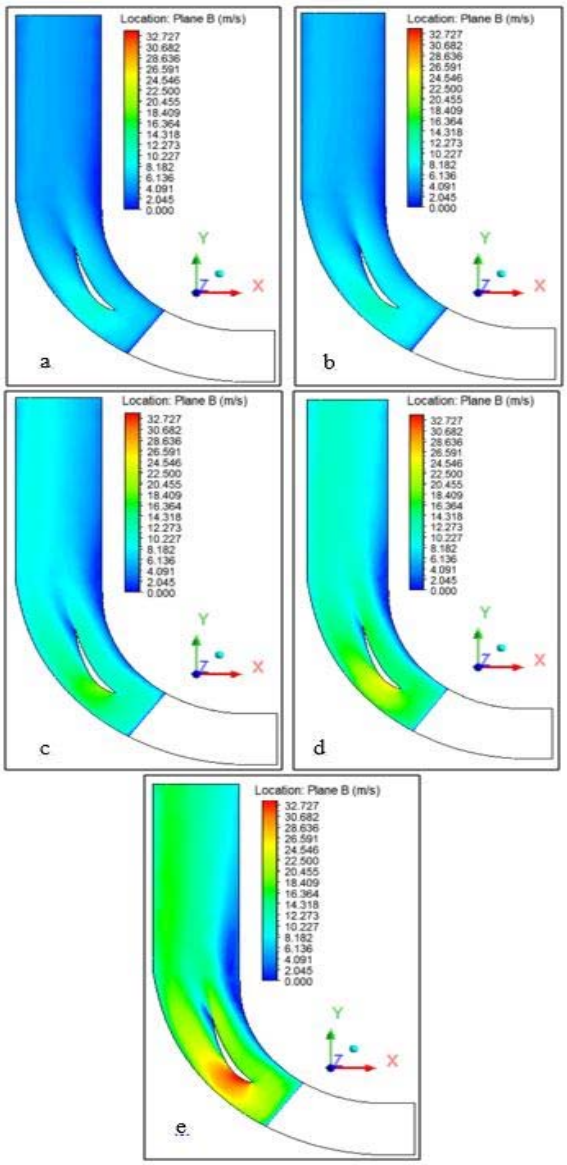

Figure-10. Flow structure at plane B for: (a) 4.527E+04, (b) 5.110E+04, (c) 7.580E+04, (d) 9.950E+04 and (e) 1.263E+05.

CONCLUSIONS

3-dimensional turning diffuser has more distorted flow. Numerical approach in present study strengthens the findings from experiment on how to improve flow uniformity and pressure recovery in turning diffuser. Results from simulation agree well with experimental results, indicating turbulence model selected and mesh constructed at early stage of numerical approach was quite accurate.

RKE turbulence model was the best model to solve both 2-dimensional and 3-dimensional turning diffuser. Velocity contours from ANSYS FLUENT show the location of major flow separation which was not captured in experiment using PIV. The critical area need to be paid attention to in designing baffles are flow separation at both left and right wall, especially at the inner wall region.

REFERENCES

[1] Fox R.W. and Kline S.J. 1962. Flow regime data and design methods for curved subsonic diffusers. J. Basic Eng. ASME, 84.pp. 303-312.

[2] El-Askary W.A. and Nasr M. 2009. Performance of a Bend Diffuser System: Experimental and Numerical Studies. Journal of Computer & Fluids. 38. pp. 160-170.

[3] Normayati N., Raghavan V. R., Safiah O. and Karim, Z.A.A. 2011. Experimental Investigation of Pressure Losses and Flow Characteristics in Bend-Diffusers by Means of Installing Turning Baffles. 2nd International Conference of Mechanical Engineering, June 6-7. Putrajaya, Kuala Lumpur.

[4] Normayati N., Raghavan V. R., Safiah O. and Karim Z.A.A. 2012. Numerical Investigation of Turning Diffuser Performance by Varying Geometric and Operating Parameters. Applied Mechanics and Materials Journal, 229-231 pp.2086-2093.

[5] Normayati N., Karim Z. A. A., Safiah O. and RaghavanV. R. 2013. Design and Development of Low Subsonic Wind Tunnel for Turning Diffuser Application. Advanced Material Research Journal, 614-615pp. 586-591.

[6] Normayati N., Karim, Z.A.A., Safiah O. and Raghavan V. R.2014. The Performance of Turning Diffusers at Various Inlet Condition. Applied Mechanics and Materials Journal, 465-466 pp. 597-602.

[7] Lindgren B. and Johansson A.V. 2002. Design and Evaluation of a Low-Speed Wind Tunnel with Expanding Corners. Technical Report No. TRITA-MEK, 2002:14, Dept. of Mechanics, KTH, SE-100 44 Stockholm, Sweden.

[8] Farsimadan E. and Mokhtarzadeh-Dehghan M.R. 2010. An Experimental Study of the Turbulence Quantities in the Boundary Layer and Near-Wake of

an Airfoil Placed at Upstream of a 90° bend. Journal of Exp. Thermal and Fluid Science. 34. pp. 979-991.

[9] Nakano T., Fujisawa N., Oguma Y., Takagi Y., and Lee S. 2007.Experimental Study on Flow and Noise Characteristics of NACA0018 Airfoil. Journal of Wind Engineering. 95pp. 511-531.

[10] Chong T. P., Joseph P. F. and Davies P.O.A.L. 2008. A parametric Study of Passive Flow Control for a Short, High Area Ratio 90 Degree Curved Diffuser. ASME J. Fluids Eng. 130(11): 212-220.

[11] Majumdar B., Mohan R., Singh S. N. and Agrawal D. P. 1998.Experimental Study of Flow in a High Aspect Ratio 90 Degree Curved Diffuser. ASME J. Fluids Eng., 120(1): 83-89.

[12] Song C.C.S., Wetzel J.M., Killen J.M. and Arndt R.E.A. 1988. Physical and Mathematical Modeling of the HYKAT. Project Report No.282, University of Minnesota.

[13] Othman S., Wahab A.A. and Raghavan V.R. 2009. Statistical Analysis on the Design of Flow Modifying Centre-Bodies in a Plenum Chamber. CFD Letters. 1(2).

[14] Adrian R.J., Meinhart C.D. and Tomkins C.D. 2000.Vortex Organization in the Outer Region of the Turbulent Boundary Layer. Journal of Fluid Mechanics. 422. pp. 1-54.

[15] Gopaliya M.K., Kumar M., Kumar S. and Gopaliya S.M 2007. Analysis of performance characteristics of S-Shaped diffuser with offset. Aerospace Science and Technology. 11. pp. 130-135.

[16] Guohui G. and Saffa B.R. 1996. Measurement and computational fluid dynamics prediction of diffuser pressure-loss coefficient. Applied Energy 54(2) pp. 181-195.

[17] Nur H. N., Normayati N., Safiah O. and Vijay R.R. 2014. Investigation of Flow Uniformity and Pressure Recovery in a Turning Diffuser by Means of Baffles. Applied Mechanics and Materials, 465-466.pp 526-530.