VOL. 12, NO. 8, APRIL 2017 ISSN 1819-6608
ARPN Journal of Engineering and Applied Sciences

www.arpnjournals.com

PRODUCTIVITY IMPROVEMENT OF SHAPING DIVISION OF AN AUTOMOBILE INDUSTRY BY USING SINGLE MINUTE EXCHANGE OF DIE (SMED) METHODOLOGY

Mukesh Shyamkant Desai[1] and A. M. Rawani[2]
[1]Department of Mechanical Engineering, National Institute of Technology Raipur Chhattisgarh, India
[2]Department of Mechanical Engineering and Dean Academics National Institute of Technology Raipur Chhattisgarh, India
E-Mail: mukeshsdesai@gmail.com

ABSTRACT

This paper presents the results of an experimental work carried out at Varroc Engineering Private Limited, an automobile industry, located in Maharashtra, India. Aim of this experimental work is to improve productivity of shaping division of the industry by reducing setup time and tool change time. For this, Single Minute Exchange of Die (SMED) methodology is applied along with Kaizen. Suitable design improvements of critical components viz. clamping fixture and tie rod are also done. Implementation of these resulted in reduction of setup time by 82.44% and tool change time by 44.21%. This helped to produce additional 23 jobs/ shift with same input. Therefore, it is concluded that modifying the existing practices results in significant reduction in setup time and tool change time ultimately improving productivity.

Keywords: internal and external activities, productivity improvement, setup time reduction, single minute exchange of die (SMED).

1. INTRODUCTION

Globalization and industrialization has change the way of organizations has to do business now a day. Customers are not satisfied by a one particular product for a long time because their expectations from the particular products cannot be fulfilled. As a result of which, they are going to purchase other products which are available in the market with more features and lesser cost and there are many manufacturers available in the market for the same product. It means that a large variety of products and machines are available in the market. Those machines are used to produce different types of products or different product variants within one product family. At the time of manufacturing every time the production of a series of product (A) is stopped, there will be some activities that needs to be carried out in order to change the configuration or the settings of the machine to be able to produce a series of another product (B) This is called a 'setup' or a 'changeover' [1].

The SMED is a theory and set of techniques that make it possible to perform equipment setup and changeover operations within 10 minutes. SMED improves setup process and provide a setup time reduction up to 90% with moderate investments. Setup operation is the preparation or after adjustment that is performed once before and once after each lot is processed [2]. Shingo divides the setup operation into two parts: Internal Setup and External Setup. Internal setup is that setup operation which can be done only when the machine is shut down (attaching or removing the dies). External setup is that setup operation which can be done when the machine is running. These operations can be performed either before or after the machine is shut down. For example getting the equipment ready for the setup operation before the machine is shut down. In Figure-1 setup operation periods are shown [2]. The setup period is constituted by internal setup and external setup. During the internal setup there is no production. In the run-up period re-adjustments and trial productions take place. This period terminates when full output capacity is reached. SMED system includes three main steps. These steps are as follows [3].

1.1 Separating internal and external setup

At this step an important question must be asked for each setup activity. "Do I have to shut down the machine to perform this activity?" The answer helps us in distinguishing between internal and external setup. This step can reduce the setup time by as much as 30 to 50 percent. The three techniques that SMED uses at this step are: Check lists, function's checks, and improved transport of dies and other parts.

1.2 Converting internal setup to external setup

In order to achieve the single digit setup time objective SMED introduces this step. At this step internal setup activities tried to be converted to external activities. So the total time that the machine is shut down will be reduced. Advance preparation of operating conditions, function standardization, and use of intermediary jigs are the techniques to support the second step.

1.3 Streamlining all aspects of the setup operation

At this step "specific principles" are applied to shorten the setup times. Implementing parallel operations, using functional clamps, eliminating adjustment and mechanization techniques are used to further setup time reduction [2] All these steps are shown in Figure-1.

ARPN Journal of Engineering and Applied Sciences

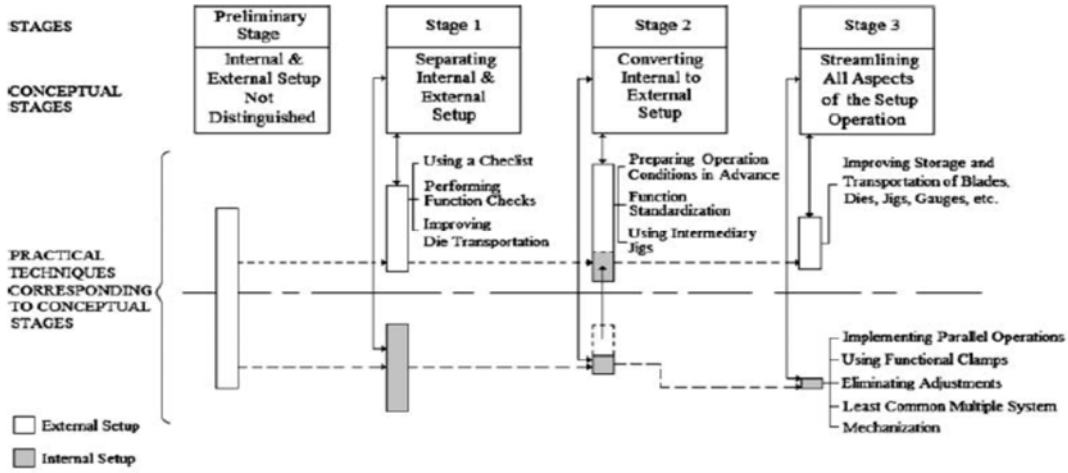

Figure-1. SMED conceptual stage and practical techniques.

2. BACKGROUND OF INDUSTRY

This experimental work was carried out at Varroc Engineering Private Limited, Aurangabad, Maharashtra, India. It is an automobile industry, which produces two and three wheeler's gears for Bajaj Auto Limited India. It has three divisions: Hot forging, Cold forging and Machining department. This study was carried out in shaping division which is a part of Machining department. The Varroc Engineering Private Limited is established to manufacture gear for two and three wheelers automobiles. They have started using SMED and some degree of success has been attained in reducing setup time and through a combination of work study and SMED methodology. However, they were looking for further reduction in setup time to a single digit through a more rigorous application of Shingo's SMED methodology. For this purpose the work was initiated.

3. PROBLEM DEFINITION

Aim of the study is to improve productivity of shaping division by reducing setup time and tool change time by applying SMED with Kaizen and design improvement of critical components viz clamping fixture, tie rod, clamping cap and setup trolley.

4. METHODOLOGY

This experimental work is focused on application of Shigeo Shingo's Single Minute Exchange of Dies methodology to reduce setup time and tool change time required to perform changeovers of shaping machine at Varroc Engineering Private Limited, Aurangabad Maharashtra. The overall goal of setup time and tool change time reduction is to minimize the amount of time needed to changeover of a shaping machine.

The six basic steps used to apply the SMED methodology are as follows. The first step of the process is to measure the total setup time and tool change time in the current state. In the second step, analysis of the setup performed to identify the internal and external activities including calculation of individual times for all setup elements performed by the person doing the changeover. The third step involves converting internal activities in to external activities. The fourth step is to reduce the total time required to perform the remaining internal elements. The five step which focuses on reducing the time for all external activities with Kaizen and design improvement of critical components viz clamping fixture, tie rod, clamping cap and setup trolley. Finally, step six is standardization of changeover procedures.

5. DATA COLLECTION AND ANALYSIS

The data has been collected from the Production Planning and Control Department of the Varroc Engineering Pvt. Ltd. The production schedule for the last three months has been analyzed. The analysis showed that shaping machines setting were the bottle neck in the company. Setup process is thoroughly evaluated on the shaping machine. It is found that there are several non value added activities happening during the setup process. The industry is more into agile manufacturing and it needs varieties of tool changes it is observed that there are many time consuming activities affecting the productivity of shaping division. Data of such activities are collected from Production Planning and Control Department of the industry. Data are tabulated in table no 1 indicating the time consumed in minutes for a given month.

Table-1. List of activities affecting productivity.

S. No	Activities	Time (Minutes/ Months)
1	Equipment failure	1360
2	Setup change and adjustment	730
3	Tool change	3800
4	Want of Man/Materials	1070
5	Want of Electricity	360
6	Measurement and adjustment	400

Above table shows that tool change time, setup and adjustment time affects the productivity of the shaping division. Hence these two parameters are considered further for this work.

6. IMPLEMENTATION OF METHODOLOGY

6.1 Measurement of the total setup time in the current state

In traditional setup operations, internal and external setups are not clearly distinguished. Setup activities that could be performed externally to the machine setup are performed as internal setup and machines therefore remain idle for extended periods of time. In order to document the current state of a typical changeover for this study, an entire changeover was videotaped. Next, the video was viewed and a changeover observation chart was created detailing all of the work elements that were performed to complete the changeover. In the current state, all work is performed as internal to the changeover, meaning that all changeover elements were performed while the machine was not running. Analysis of the current changeover process shows that 45 minutes were required to perform the changeover from the last good piece of the previous run until the first good piece of the next run.

Table-2: Shows setup analysis sheet of a shaping machine. Researcher observed the three complete setups and time calculated for each activity before implementation of SMED.

The Table-2 shows the data of the different activities during setup. The table also shows:

- Initially all activities of setup change were performed under internal activities.
- Initially time required for one complete setup was 45 - 50 minutes.

6.2 Identification of internal and external elements

In the current state, all activities required to perform the setup are internal to the machine setup. Table-3. Provides individual times of the internal elements required to perform the changeover in the original state. As previously stated, total time to perform the changeover in the current state was 45 minutes with all elements being internal to the setup and required that the machine be idle during completion of all setup elements.

The Table-3 shows Identified internal and external activities.

6.3 Conversion of internal activities in to external activities

The most important step in implementing SMED is distinguishing between internal and external setup activities and then implementing changes to convert as many of the internal activities to external as possible. In this step, it is important to recognize that preparation of parts or tools in addition to any maintenance activities and so forth should not be done while the machine is stopped. The goal of this step in the process is to identify any changeover activities that can be performed while the machine is running, which in turn leads to a direct reduction in the amount of time the machine is required to sit idle during the changeover. Mastering the distinction between internal and external setup is the essential task towards achieving SMED

To assist in the analysis and conversion of internal to external elements, a changeover element chart was created. Table-4 details the analysis of elements that were evaluated for conversion from internal activities in to external activities.

The Table-4 shows Setup analysis sheet of to converting internal activities in to external activities. It also shows that

- Activity numbers 1, 11, 13 and 15 has been converted in to external activities from internal activities.
- 140 sec saved by converting in to external activities from internal activities.

6.4 Reduction of total time required to perform the remaining internal elements

In applying step four of the SMED methodology, the task of the researcher is to explore alternate ways the setup elements shown as Table 5. Setup analysis sheet of total time required to perform the remaining internal elements

Inference of table no 5

- Activity number 22 (rotate, tighten & adjust the fixtures bolts w.r.to run out) and activity 25 (fix and adjust the height of tie rod) are critical activities which takes 245 and 800 seconds respectively during setup.
- It is observed that during the setup change various activity like fixing and unfixing various nuts and bolts was done by manual spanners like activities no 6 to 10, 16 to 19 and 22 to 24 by using SP1825 screw driver, Hexagon wrench and automatic Spanner modification as shown in Photograph no 2. Hence 926 seconds i.e. 15.43 minutes has been saved. It has been shown in the table number 5 against the activity number mentioned

It is observed that during the setup change various activities like removing the burrs from fixture and base plate etc was done by manual like activities no 5,8,10 and 14. It has been modified by using compressed Air (Air Blow Gun) as shown in Photograph no 3. As a result of this, burrs removed easily and Hence 178 seconds has been saved. It has been shown in the table number 5 against the activity number mentioned.

Table-2. Setup analysis sheet of a shaping machine.

Name of machine: Shaping; BA 4156; Lorenz gear		**Operator: Anil Patil**			
Shift: First		**Set up time before SMED**			
S. No	**Activities**	**Day One Time (Sec)**	**Day Two Time (Sec)**	**Day Three Time (Sec)**	**Initially all activities was internal**
1	To prepare trolley for setup	120	120	120	Internal
2	Take an Allan key	10	10	10	Internal
3	Rotate the fixture	30	30	30	Internal
4	Remove the tie rod	25	20	22	Internal
5	Remove the burrs from tie rod, with the help of Allan key	65	60	70	Internal
6	Remove the fixtures bolts	40	35	38	Internal
7	Remove the previous fixture	200	206	209	Internal
8	Remove the burrs from fixture	35	30	28	Internal
9	Remove the insert rod of fixture	20	25	30	Internal
10	Clean the hole or remove the burrs from base plate	68	50	56	Internal
11	Take new fixture	10	10	10	Internal
12	Rotate the base plate	20	20	20	Internal
13	Clean the new fixture by compressed air	20	20	20	Internal
14	Clean the base plate	40	40	40	Internal
15	Take dial indicator with magnetic stand	10	10	10	Internal
16	Fix & adjust the collector	65	60	58	Internal
17	Fix the new fixture	85	75	74	Internal
18	Fix the bolts of fixture	278	240	253	Internal
19	Rotate, tight & adjust the fixture	120	100	110	Internal
20	Fix the stand of dial indicator	10	10	10	Internal
21	Check the run-out of tie rod	100	100	100	Internal
22	Rotate, tighten & adjust the fixtures bolts w.r.to run out	245	240	243	Internal
23	Remove the dial indicator	20	20	20	Internal
24	Fix the bottom bolts of fixture	20	25	27	Internal
25	Fix and adjust the height of tie rod	800	940	955	Internal
26	Fix the job & fix the cap	45	50	50	Internal
27	Set the M/c parameter in CNC Programme	150	100	120	Internal
	Total time (sec)	2651	2636	2743	
	Total time (Min)	45	44	46	

Table-3. Setup analysis sheet of to identify the internal and external activities.

Name of Machine: Shaping; BA 4156; Lorenz gear	**Operator: Anil Patil**	**Name of machine: Shaping; BA 4156; Lorenz gear**
Shift: First	**Set up time before SMED**	

Sr. No	Activities	Day One Time (Sec)	Day Two Time (Sec)	Day Three Time (Sec)	Separation of Internal & External Activities
1	To prepare trolley for setup	120	120	120	External
2	Take an Allan key	10	10	10	Internal
3	Rotate the fixture	30	30	30	Internal
4	Remove the tie rod	25	20	22	Internal
5	Remove the burrs from tie rod, with the help of Allan key	65	60	70	Internal
6	Remove the fixtures bolts	40	35	38	Internal
7	Remove the previous fixture	200	206	209	Internal
8	Remove the burrs from fixture	35	30	28	Internal
9	Remove the insert rod of fixture	20	25	30	Internal
10	Clean the hole or remove the burrs from base plate	68	50	56	Internal
11	Take new fixture	10	10	10	External
12	Rotate the base plate	20	20	20	Internal
13	Clean the new fixture by compressed air	20	20	20	External
14	Clean the base plate	40	40	40	Internal
15	Take dial indicator with magnetic stand	10	10	10	External
16	Fix & adjust the collector	65	60	58	Internal
17	Fix the new fixture	85	75	74	Internal
18	Fix the bolts of fixture	278	240	253	Internal
19	Rotate, tight & adjust the fixture	120	100	110	Internal
20	Fix the stand of dial indicator	10	10	10	Internal
21	Check the run-out of tie rod	100	100	100	Internal
22	Rotate, tighten & adjust the fixtures bolts w.r.to run out	245	240	243	Internal
23	Remove the dial indicator	20	20	20	Internal
24	Fix the bottom bolts of fixture	20	25	27	Internal
25	Fix and adjust the height of tie rod	800	940	955	Internal
26	Fix the job & fix the cap	45	50	50	Internal
27	Set the M/c parameter in CNC Programme	150	100	120	Internal
	Total time (sec)	2651	2636	2743	
	Total time (Min)	45	44	46	

ARPN Journal of Engineering and Applied Sciences

Table-4. Setup analysis sheet of to converting internal activities in to external activities.

Activity no	Activity	Before SMED	After SMED	Benefits
01	To prepare trolley for setup	It was Internal activity		Searching time of tools, spanners, Allen keys etc is eliminated
11	Take new fixture	Fixture was not arranged as per part no	Converted in to external activity	Fixture has been arranged as per part no hence saved 05 sec
13	Clean the new fixture by compressed air	It was Internal activity	Converted in to external activity	Easy, fast and parallel operation
15	Take dial indicator with magnetic stand	It was Internal activity	Converted in to external activity	Parallel operation

Table-5. Setup analysis sheet of total time required to perform the remaining internal elements.

Name of machine: Shaping ; BA 4156; Lorenz gear		**Operator : Anil Patil**			**Name of machine: Shaping ; BA 4156; Lorenz Gear**	**Operator : Anil Patil**			**Name of fixture: RE 332 Part no: 2 01 3 150**
Shift: First		**Set up time before SMED**				**Set up time after SMED**			**Shift: First**
S. No	Activities	Day One Time (Sec)	Day Two Time (Sec)	Day Three Time (Sec)	Separation of Internal & External Activities	Day One Time (Sec)	Day Two Time (Sec)	Day Three Time (Sec)	Modifications/ Remarks and Benefits
2	Take an Allan key	10	10	10	Internal	02	02	02	Setup trolley has been prepared as shown in below in photograph no 01 Benefits: Searching time of tools, spanners, Allen keys etc is eliminated
3	Rotate the fixture	30	30	30	Internal	20	20	18	Repeated activity
4	Remove the tie rod	25	20	22	Internal	05	05	05	SP1825 screw driver, Hexagon Wrench has been used as shown in below in photograph no 02
5	Remove the burrs from tie rod, with the help of Allan	65	60	70	Internal	05	05	06	By compressed Air (Air Blow Gun) Modification as shown in

	key								Photograph no 03 Benefits: easy and fast operation and burrs removed fast
6	Remove the fixtures bolts	40	35	38	Internal	15	15	17	SP1825 screw driver, Hexagon Wrench & automatic Spanner Modification as shown in Photograph no 02 Benefits: easy and fast operation
7	Remove the previous fixture	200	206	209	Internal	45	47	47	SP1825 screw driver, Hexagon Wrench & automatic Spanner Modification as shown in Photograph no 02 Benefits: easy and fast operation
8	Remove the burrs from fixture	35	30	28	Internal	05	07	07	By compressed Air (Air Blow Gun) Modification as shown in Photograph no 03 Benefits: easy and fast operation and burrs removed fast
9	Remove the insert rod of fixture	20	25	30	Internal	10	10	13	SP1825 screw driver, Hexagon Wrench & automatic Spanner Modification as shown in Photograph no 02 Benefits: easy and fast operation
10	Clean the hole or remove the burrs from base plate	68	50	56	Internal	10	12	09	By compressed Air (Air Blow Gun) Modification as shown in Photograph no 3 Benefits: easy and fast operation and burrs removed fast
12	Rotate the base plate	20	20	20	Internal	15	16	15	
14	Clean the base plate	40	40	40	Internal	10	11	12	By compressed Air (Air Blow Gun) Modification as shown in Photograph no 03. Benefits: easy and fast operation and burrs removed fast
16	Fix & adjust the collector	65	60	58	Internal	30	32	29	SP1825 screw driver, Hexagon Wrench & automatic Spanner Modification as shown in Photograph no 02. Benefits: easy and fast operation
17	Fix the new fixture	85	75	74	Internal	60	62	61	SP1825 screw driver, Hexagon Wrench & automatic Spanner Modification as shown in Photograph no 02 Benefits: easy and fast operation
18	Fix the bolts of fixture	278	240	253	Internal	30	32	33	SP1825 screw driver, Hexagon Wrench & automatic Spanner Modification as shown in Photograph no 2 Benefits: easy and fast operation
19	Rotate, tight &	120	100	110	Internal	25	24	22	SP1825 screw driver, Hexagon

	adjust the fixture								Wrench & automatic Spanner Modification as shown in Photograph no 02 Benefits: easy and fast operation
20	Fix the stand of dial indicator	10	10	10	Internal	12	10	11	
21	Check the run-out of tie rod	100	100	100	Internal	40	39	38	Here time saved by 50 sec by keeping Dial gauge ready before the setup
22	Rotate, tighten & adjust the fixtures bolts w.r.to run out	245	240	243	Internal	20	22	23	Critical activity SP1825 screw driver, Hexagon Wrench & automatic Spanner Modification as shown in Photograph no 02 Benefits: easy and fast operation
23	Remove the dial indicator	20	20	20	Internal	10	10	09	
24	Fix the bottom bolts of fixture	20	25	27	Internal	10	10	12	SP1825 screw driver, Hexagon Wrench & automatic Spanner Modification as shown in Photograph no 02 Benefits: easy and fast operation
25	Fix and adjust the height of tie rod	800	940	955	Internal	35	37	38	Critical activity Here maximum time had saved by Design the dedicated tie rod for each fixture drawings of modified tie rod as shown in figure no 05
26	Fix the job & fix the cap	45	50	50	Internal	20	22	19	Here time had saved by design and modifications of Cap as shown in figure no 06
27	Set the M/c parameter in CNC Programme	150	100	120	Internal	25	27	24	Here maximum time had saved by keeping the CNC Programme ready for a particular Job / Work piece
	Total time (sec)	2651	2636	2743		474	478	486	
	Total time (Min)	45	44	46		7.9	7.96	8.1	

6.5 Reduction in time for all external activities with Kaizen and design improvement of critical components

During the setup it has been observed that, activity number 22 (rotate, tighten & adjust the fixtures bolts w.r.to run out) and activity 25 (fix and adjust the height of tie rod) are critical activities which take 800 - 960 seconds during setup. Especially activity number 25 takes 800 – 960 seconds at the time of setup change, so it is absolutely necessary to analyze this activity and to do why - why analysis for this activity.

Figure-2 shows drawing of tie rod before designed changes and Figure-3 shows drawing of tie rod after designed changes as well as Figure-4 shows drawing of cap before designed changes and Figure-5 shows drawing of cap after designed changes

ARPN Journal of Engineering and Applied Sciences

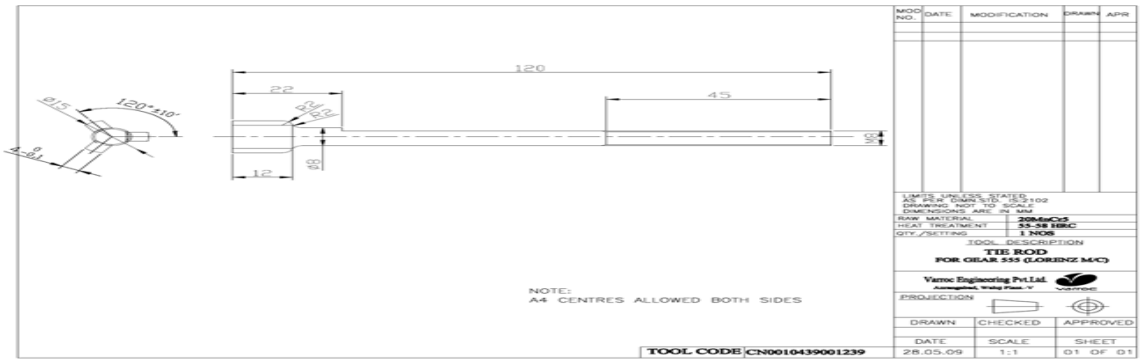

Figure-2. Drawing of tie rod before design changes.

During analysis it is found that the length of the tie rod is not suitable for the part no 2 01 3 150. Also it is found that Clamping cap of the tie rod is not designed properly for particular tie rod of particular part number say part no 2 01 3 150 for example. In order to find out the proper and permanent solution on this problem researcher has designed the dedicated tie rod with the help of designed department of the stated industry. In the existing tie rod sleeping of Clamping cap` is a common problem due to this lot of time has been taken during the setup above Figure-2. Shows drawing of tie rod before designed changes in which thread length was 45mm here thread length were more that is why Clamping cap was not fixed properly and hence problems of sleeping was occurred. Also Tie rod was not fixed properly at base plate this two areas has been concentrated at the time of design.

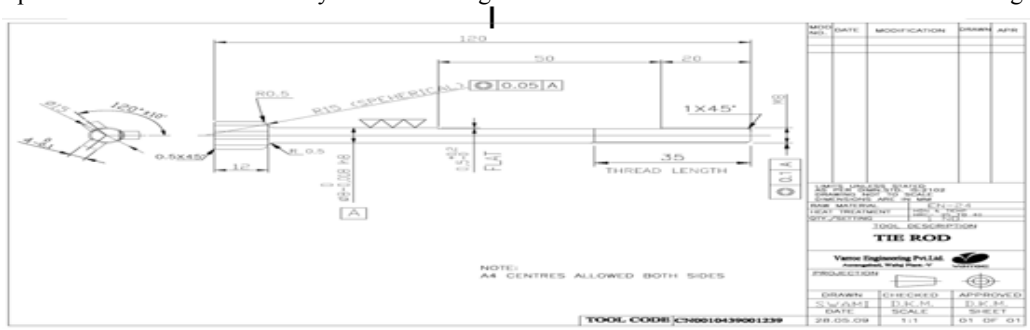

Figure-3. Drawing of tie rod after design changes.

Figure-3: Shows the modified drawing of tie rod. In this design, we have reduced the thread length from 45mm to 35 mm. Also we have made a change in the tie rod head by providing the six slots, which is parallel to the axis of the tie rod as shown in the above Figure-3. As well as we have improved the surface finish of the tie rod up to 0.2 microns so that it is easy to fixed and remove in the base plate. After modification, it was found that a lot of time has been saved in this activity 25 (fix and adjust the height of tie rod) and time has been reduced by 765 seconds. i.e. from 800 seconds to 35 seconds

ARPN Journal of Engineering and Applied Sciences

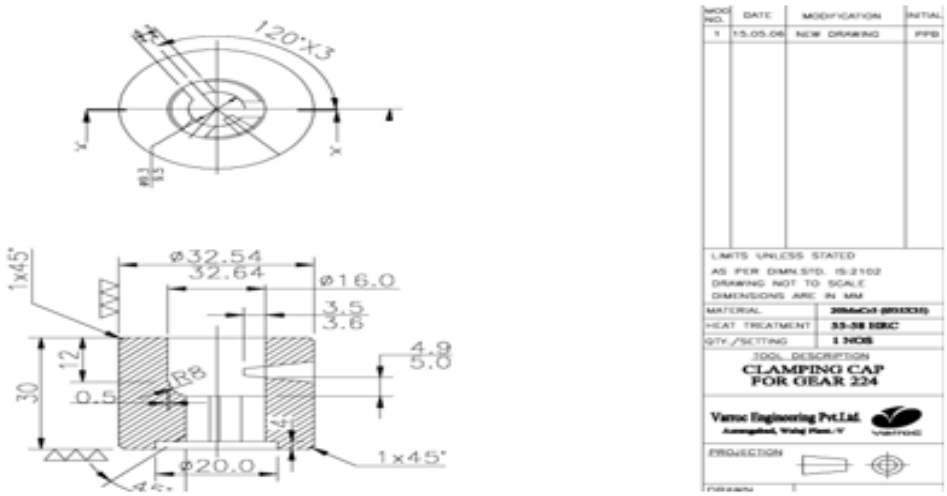

Figure-4. Drawing of Clamping cap before changes of design.

Figure-4 shows drawing of clamping cap before changes of design. In this, clamping cap slippage was the common problem as well as clamping pin was not fixed properly

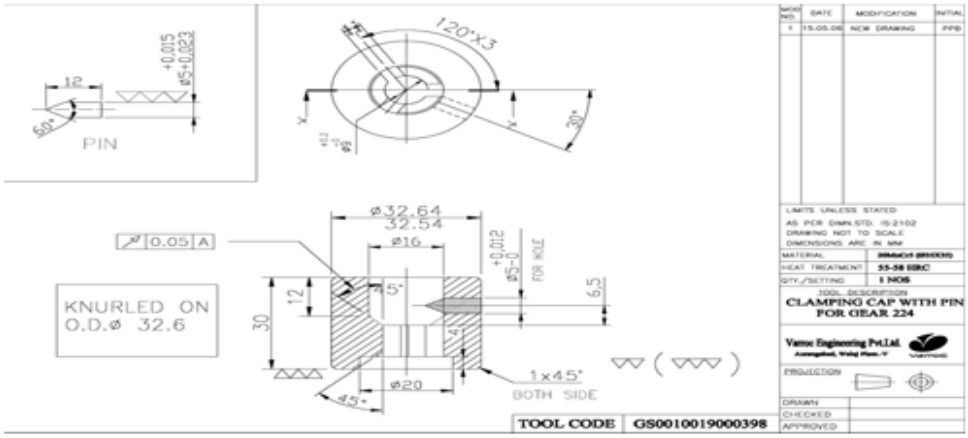

Figure-5. Drawing of clamping cap after designed changes (modified drawing of clamping cap).

Figure-5 shows drawing of clamping cap after designed changes (modified drawing of clamping cap). To overcome the problem of slippage in the clamping cap design we have provided the Knurling operation on OD 32.64 hence slippage problem was eliminated. Also we have made changes in the socket of Pin, previously it was trapezoidal, and we have made it conical, as shown in Figure-5. And as a result of which, it was properly fixed in to the socket. Hence tie rod is not vibrated during the operation as well as it provided good grip with the base plate

Photograph-1. SP1825 screw driver, Hexagon wrench & automatic Spanner.

Photograph-1: Shows SP1825 screw driver, Hexagon wrench and automatic Spanner. Initially fixing and removing of nuts and bolts was done by simple screw drivers and Allen keys manually. At the time of setup, it is

ARPN Journal of Engineering and Applied Sciences

found that lot of time had been spending in these activities and these activities are 4, 6, 7, 9, 16, 17, 18, 19, 22, 24 and 25 as mentioned in the Table-2. It is observed that near about 47 % activities related to fixing and removing of nuts and bolts and these activities are carried out by manually. This is one of the important modifications that we have done at the time of setup change. As a result of which total time saved by this modification/ automation in the Shaping cell was 926 seconds i.e. 15.43 minutes.

Photograph-2 Air blow gun.

Photograph-2: Shows Air Blow Gun. Initially removing of burrs from base plate, tie rod, clamping cap, fixture was done by manually. At the time of setup, it is found that lot of time has been spend in this activities and this activities are 5, 8, 10 and 14 as mentioned in the Table no 02. It is observed that near about 18 % activities related to removing the burrs and these activities are carried out by manually. This is one of the important modifications that we have done at the time of setup change. As a result of which total time saved by this modification/ automation in the Shaping cell was 178 seconds.

6.6 Standardization of new procedure

Establishing precise procedures for operator's work in the changeover process is necessary to show the precise sequence of operations in which the operator is required to perform the changeover. Standardized work instructions detailing the new changeover process will be developed and posted at workstations. Additionally, operators will be trained on the new changeover procedures to ensure the benefits of the new method are realized. The benefits of standardizing the setup procedures are documentation of the correct process for all shifts, reductions in variability, easier training of new operators and a baseline for improvement activities.

Table-6: Shows tool change time analysis sheet of a shaping machine. Researcher observed the three complete setups and tool change time calculated for each activity before implementation of SMED and after implementation of SMED methodology.

Table-6. Tool change time analysis sheet.

Name of Machine: Shaping; BA 4156; Lorenz Gear Shift: First Operator: Anil Patil		**Tool change time before SMED**					**Tool change time after SMED**	**Name of fixture: RE 332 Part no: 2 01 3 150**
S. No	Activities	Time (Sec)	Time (Sec)	Time (Sec)	In Past all Activities was Internal	Activity (Internal External)	Time After (Sec)	Modifications/ Remarks and Benefits
1	To take spanner	10	10	10	Internal	Internal	03	Setup trolley has been prepare as shown in above in photograph no 1
2	To take a new cutter	8	7	8	Internal	External	05	Originally this is external activity
3	To remove the old cutter	30	25	28	Internal	Internal	20	SP1825 screw driver, Hexagon Wrench has been used as shown in above photograph no 2
4	To placed old cutter aside	14	16	17	Internal	External	06	Originally this is external activity
5	To clean the Spindle of M/c	240	243	245	Internal	Internal	60	By compressed Air (Air Blow Gun) Modification as shown in Photograph no 03 Benefits: easy and fast operation and burrs removed fast
6	To clean the cutter	23	25	27	Internal	External	11	By compressed Air (Air Blow Gun) Modification as shown in Photograph no 03 Benefits: easy and fast

								operation and burrs removed fast
7	To clean the Nut & cap of cutter	60	55	58	Internal	Internal	32	By compressed Air (Air Blow Gun) Modification as shown in Photograph no 03 Benefits: easy and fast operation and burrs removed fast
8	To fixed the cutter on the spindle & tight it	180	175	182	Internal	Internal	62	SP1825 screw driver, Hexagon Wrench has been used as shown in above photograph no 2
9	To rotate & take the Run-out of the cutter	175	175	175	Internal	Internal	170	
10	To fixed the job	120	120	120	Internal	Internal	100	SP1825 screw driver, Hexagon Wrench has been used as shown in above photograph no 2
	Total time (sec)	860	851	870			469	
	Total time (Min)	14.33	14.10	14.50			7.81	

Inference of Table-6:

- Initially, all activities of setup change were performed under internal activities.
- Initially, time required for one complete setup was 15 - 20 minutes.
- Activity number 6 has been converted in to External Activity from Internal Activity.
- It is observed that during the tool change various activities like fixing and unfixing various nuts and bolts was done by manual spanners like activities no 3,8 and 10 by using SP1825 screw driver, Hexagon wrench & automatic spanner. Modification as shown in Photograph-2 as a result of which a lot of time has been saved. It has been shown in the table number 2 against the activity number mentioned above.
- It is observed that during the tool change various activity like removing the burrs from fixture and base plate etc was done by manual like activities no 5, 6 and 7 by using by compressed Air (Air Blow Gun) as shown in Photograph-3 This burrs removed easily and lot of time has been saved and it has been shown in the Table-3 against the activity number mentioned

7. RESULTS AND CONCLUSIONS

The ultimate result of the study is to improve the productivity of shaping division. To support that, some of the sub results also need to be addressed. The sub results are the results of setup time reduction after SMED implementation as follows. Table 7 shows the setup time reduction, before and after implementation of SMED at shaping division.

Table-7. Set up time reduction (minutes).

S. No	Setup time before implementation of SMED (min)	Setup time after implementation of SMED (min)	Set up time reduced (min)	Set up time reduced (%)
1	45	7.9	37.1	82.44 %

As a result, the setup time has been reduced from 45 minutes to 7.9 minutes. Hence 37.1 minutes has been saved for one setup and 82.44 % Setup change time has been reduced due to successful implementation of SMED methodology in a shaping division. It is shown in above Table-7.

Table-8 shows the tool change time reduction in minutes, before and after implementation of SMED at shaping division.

Table-8. Tool change time reduction (minutes).

S. No	Tool change time before implementation of SMED (min)	Tool change time after implementation of SMED (min)	Tool change time reduced (min)	Tool change time reduced (%)
1	14.33	7.81	6.52	44.21 %

As a result, the tool change time has been reduced from 14.33 minutes to 7.81 minutes. Hence 6.52 minutes has been saved for one tool change and 44.21 % tool change time has been reduced due to successful implementation of SMED methodology in a Shaping division. It is shown in above Table-8.

Table-9 shows the improvement of productivity of shaping division due to successful implementation of SMED

Table-9. Numbers of Jobs before and after implementation of SMED.

S. No	Total no of Jobs before implementation of SMED (Nos)	Total no of Jobs after implementation of SMED (Nos)	Total no of Jobs increased due to implementation of SMED (Nos)
1	213	236	23

After successful implementation of SMED, Productivity of shaping division was improved. As results of which shaping machine produces 23 additional jobs / shift with same input. In this experimental work, SMED with integration of quick clamping fixture design, tie rod design and Kaizen has applied to reduce setup time and tool change time of shaping machine. The results of this study prove that setup time and tool change time reduction is an effective tool which can be applied to improve a manufacturing organization's ability to improve customer satisfaction through better utilization of plant assets. Therefore, it is concluded that modifying the existing practices results in significant reduction in setup time and tool change time ultimately improving productivity.

ACKNOWLEDGEMENT

Author would like to thank to Dr. A. M. Rawani, Professor, department of mechanical engineering and Dean academic National Institute of Technology Raipur, India for supporting this work by providing a good research environment, motivation to publish a paper.

REFERENCES

[1] Dirk Van Goubergen. 2009. An Integrated Change Framework for Setup Reduction. Proceedings of the Industrial Engineering Research Conference. pp. 30-36.

[2] Berna Ulutas. 2011. An application of SMED Methodology. World Academy of Science, Engineering and Technology Turkey. 79.

[3] Desai M. S., Warkhedkar R. M. 2011. Productivity Enhancement by Reducing Adjustment Time and Setup Change. International Journal of Mechanical and Industrial Engineering. 1(1): 30-37.

[4] Ali Allahverdi., H. M. Soroush. 2008. The Significance of Reducing Setup Times/Setup Costs. European Journal of Operational Research. 187, pp. 978- 984.

[5] B. Kayis., S Kara. 2007. Set-up Reduction (SUR) in Injection Molding Process - A Study in packing Industry. 4th International Conference and Exhibition on Design and Productivity of Machine and Dies /Moulds, CESME, Turkey. 21-23.

[6] Ciavott Michele, Paolo Detti, Carlo Meloni, Marco Pranzo. 2008. A Bi-Objective Coordination Setup Problem in a Two-Stage Production System. European Journal of Operational Research. 189, pp. 734-745.

[7] Cakmakci Mehmet. 2009. Process Improvement: Performance Analysis of the Setup Time Reduction-SMED in the Automobile Industry. International Journal Advance Manufacturing Technology. pp. 168-179.

[8] Cakmakci Mehmet., Karasu Mahmut Kemal. 2007. Set-up time reduction process and integrated predetermined time system MTM-UAS: A study of application in a large size company of automobile industry. International Journal Advance Manufacturing Technology. pp. 334-344.

[9] Dirk Van Goubergen., Hendrik Van Landeghem. 1990. A Quantitative Approach for Set-Up Reduction of Machine Line. Production and Inventory Management Journal. 31, pp. 55-59.

[10] Dirk Van Goubergen., Hendrik Van Landeghem. 1994. An Integrated Methodology for More Effective Set-up Reduction. Production and Inventory Management Journal. 60 pp. 45-59.

[11] Dirk Van Goubergen., Hendrik Van Landeghem. 2002. Reducing Set-up Times of Manufacturing Line. International Conference on Flexible Automation and Intelligent Manufacturing. Dresden, Germany.

[12] Dirk Van Goubergen., Hendrik Van Landeghem. 2000. An Integrated Methodology for More Effective Set-up Reduction. Proceedings of IIE Solutions Clevelan.

[13] Asim Kumar Tilkar., Nagaich Ravi., Marwah Amit Kumar. 2013. Improving Productivity of a Manufacturing Plant using Single Minute Exchange of Die. International journal of advanced scientific and technical research. 1(3): 12-20.

[14] Abraham Arun, Ganapathi K.N., Motwani Kailash. 2012. Setup Time Reduction through SMED Technique in a Stamping Production Line. SAS TECH Journal. 11(2012).

[15] Desai M.S. 2012, Productivity Enhancement by Reducing Setup Time - SMED: Case study in the Automobile factory. Global Journal of Researches in Engineering Mechanical and Mechanics Engineering. 12(5), Version 1.

[16] Docki Saraswati., Andi Cakravastia., Halim Abdul Hakim. 2006. A Joint Economic Lot Sizing Model with a Setup Time Reduction for a Single Supplier and a Single Buyer. Proceedings of the 7th Asia Pacific Industrial Engineering and Management Systems Conference 17-20 December 2006, Bangkok, Thailand.

[17] Darwish M.A. 2008. EPQ Models with Varying Setup Cost. International Journal of Production Economics. 113, pp. 297-306.

[18] Dave Yash., Nagendra Sohani. 2012. Lean thinking. International Journal of Lean Thinking. 3(2).

[19] Loera., G. Espinosa., C. Enríquez., J. Rodriguez. 2013. Productivity in Construction and Industrial Maintenance. The Manufacturing Engineering Society International Conference, MESIC 2013, Procedia Engineering. 63, pp. 947-955.

[20] Jeffrey E., Schaller b., Gupta Jatinder N. 2008. Single Machine Scheduling With Family Setups to Minimize Total Earliness and Tardiness. European Journal of Operational Research. 187, pp. 1050-1068.

[21] Joakim Storck., Bengt Lindberg. 2007. A Cost Model for the Effect of Setup Time Reduction in Stainless Steel Strip Production. Swedish Production Symposium. pp. 10-17.

[22] Hemanand, Improving Productivity of Manufacturing Division Using Lean Concepts and Development of Material Gravity feeder - A Case Study. International Journal of Lean Thinking. 3(2).

[23] Khalid S. Al-Saleh. 2011. Productivity improvement of a motor vehicle inspection station using motion and time study techniques. International Journal of King Saud University - Engineering Sciences. 23, pp. 33-41.

[24] Mohammed Ali Almomani., Mohammed Aladeemy., Abdelhakim Abdelhadi., Ahmad Mumani. 2013. A proposed approach for setup time reduction through integrating conventional SMED method with multiple criteria decision-making techniques. International Journal of Computers and Industrial Engineering. 66, pp. 461-469.

[25] M. Kemal karasu., Mehmet Cakmakci., Merve B.Cakiroglu. 2014. Improvement of Changeover Times via Taguchi Empowered SMED/Case study on Injection molding Production. International Journal of Measurement. 47, pp. 741-748.

[26] Mandwe Priti. 213. Productivity Improvement of Crankshaft. International Journal of Science & Technology Research. 2(7).

[27] Mostafa E. Shehata., Khaled M. El- Gohary. 2011. Towards improving construction labor productivity and projects' performance. Alexandria Engineering Journal. 50, pp. 321-330.

[28] Mahto Dalgobind, Anjani Kumar. 2010. Novel Method of Productivity Improvement and Waste Reduction through Recycling of Submerged Arc Welding Slag. Jordan Journal of Mechanical and Industrial Engineering. 4(4), ISSN 1995-6665, pp. 451-466.

[29] Pablo Guzman Ferradas., Konstantinos Salonitis. 2013. Improving changeover time: a tailored SMED approach for welding cell. Forty Sixth CIRP

Conferences on Manufacturing Systems Procedia CIRP. 7 pp. 598-603.

[30] Robinson A. 1990. Modern approaches to manufacturing improvement: The Shingo system. (Portland, OR: Productivity Press).

[31] Shingo Singo. 1985. A Revolution in Manufacturing: The SMED System (Productivity Press, Cambridge.).

[32] S. Palanisamy., Salman Siddiqui. 2013. Changeover Time Reduction and Productivity Improvement by Integrating Conventional SMED Method with Implementation of MES for Better Production Planning and Control. International Journal of Innovative Research in Science, Engineering and Technology. 2(12).

[33] S. Patel., P. Shaw., B. G. Dale. 2001. Set-up time reduction and mistake proofing methods: A study of application in a small company. Business Process Management Journal. 1: 65-75.

[34] Sofia Ana Alves. 2009. Improving SMED in the Automotive Industry: Case study, POMS 20th Annual Conference Orlando, Florid U.S.A.

[35] Samaddar Subhashish., Craig A. Hill. 2007. Controlling Adverse Effect on Work in Process Inventory While Reducing Machine Setup Time. European Journal of Operational Research. 180 pp. 249-261.

[36] Shu-Lu Hsu. 2000. Setup Cost Reduction in the Lumpy Demand Production Quantity Model with Discounting. International Journal of Information and Management Science. 11(4): 31-44.

[37] T. Czumanski., H. Lodding. 2012. Integral Analysis of Labor Productivity, 45th CIRP Conference on Manufacturing Systems, Procedia CIRP. 3 pp. 55-60.

[38] William M. Goriwondo., Samson Mhlanga., Tapiwa Kazembe. 2011. Optimizing a Production System Using tool of Total Productive Maintenance: Data labs Pharmaceuticals as a Case Study. Proceedings of the 2011 International Conference on Industrial Engineering and Operations Management Kuala Lumpur, Malaysia.