VOL. 12, NO. 13, JULY 2017 ISSN 1819-6608
ARPN Journal of Engineering and Applied Sciences

www.arpnjournals.com

THE DEVELOPMENT OF SMOKING TOOLS FOR BILIH AT LAKE SINGKARAK SOLOK DISTRICT, WEST SUMATRA, INDONESIA

Delvi Yanti
Agricultural Engineering Program, Faculty of Agricultural Technology, Andalas University, Limau Manis, Padang, West Sumatra, Indonesia
E-Mail: delviyanti@fateta.unand.ac.id

ABSTRACT

Bilih *(Mystacoleuseus padangensis)* is an endemic fish which population found only in Lake Singkarak, Solok regency, West Sumatra Province, Indonesia. Bilih is a product that decompose quickly. Therefore, we need a treatment so that bilih is able be stored longer. Then, it could be easily marketed, ie by smoking. This study is aimed to determine the nutritional value of smoked bilih generated and the financial feasibility of smoking tool developed. The results of the technical test tool is the smoked bilih have a good quality (yellow brownish and there was no physical damage on smoked bilih). The nutritional value of smoked bilih generated was 14.85 ± 0.06% (moisture); 11.61 ± 0.03% (dust); 60.14 ± 1.16% (protein), 12.14 ± 0.01% (fat), and 1.26 ± 1.06% (carbohydrate). The results of the economic analysis tool is the smoking tool is appropriate to be used because it has the B / C ratio> 1 and NPV> 0, i.e. 1.11 and 4, 329, 039.00.

Keyword: smoking tools, bilih, technical testing, economic analysis.

1. INTRODUCTION

Bilih (Mystacoleuseus padangensis) is an endemic fish which population found only in Lake Singkarak. Bilih is one of the income source for the people who live around Lake Singkarak. To date, the fishing communities on Lake Singkarak sell raw bilih (by: out processing the fish). The Income of fishermen around Lake Singkarak is highly dependent on the amount of the catch and the price of the fish. If the catch is often an obstacle for many fishermen because fish prices decreased and if the catch was a bit of the proceeds of fishermen will be discharged for any transportation costs.

Bilih is one product that is rapidly undergoing the decay process. Therefore, we need a treatment so that bilih could be stored longer so it is easily marketable and can meet the needs of consumers as well as having a high economic value. The necessary treatment is preserving, one of them by smoking.

Preserving fish by smoking commonly made by traditional people using combustion smoke directly. The fish are preserved by using traditional smokehouse, located on top of the iron just above the source of the smoke by : out smoke filter so the smokes from the burning of raw materials directly absorbed by the fish smoked. According to [1], when viewed from environment and health, traditional smoked fish is considered unhealthy, because it can cause polyaromatic hydrocarbons emissions (PAHs) in air and water. PAH is carcinogenic in general. A carcinogenic substance can cause cancer.

Based on the conditions above, a technological innovation that can improve preservation methods that have been used previously society is needed. Smoking tool (smoking home and fish) are designed using aluminum material, so that the smokehouse and the shelf where the fish is laid is not easily corroded and does not damage the texture of smoked fish. Smokehouse will be designed cube-shaped, by : a length of 95 cm x width 70 cm x height 70 cm. So this research was conducted to determine the nutritional value of smoked bilih generated and the financial feasibility of smoking tool designed.

2. STUDY OF LITERATURE

2.1 Bilih

Bilih is a freshwater fish that lives and is endemic in public waters Lake Singkarak. Bilih *(Mystacoleuseus padangensis)* belongs to the genus Mystacoleuseus, Actinopterygii class, Cypriniformes order and Cyprinidae family. Adult Bilih ranged from 58.00 to 107.00 mm in length by : an average length of 89.00 mm. Bilih body weight ranged from 3.00 to 10.50 g by: an average weight of 6.80 grams. Average height of Bilih is18.50 mm by : "Homocercal" tail type. The rays on the dorsal fin, chest, and abdomen consist of one hard ray and 8-9 pieces weak rays. On *(Linea literalists)* side, the cycloid scales type are 35 pieces and over the side line are 5 pieces. Abdominal area scales until the bottom of the tail is silvery-white on the top line while the side or the back is rather dark (brown).

Based on the results of several studies that have been done, bilih also found in several places in Sumatra, for instance Lake Dibawah, Batang Anai River and Lake Toba. According to [2], the bilih population in Batang Anai river found since the opening of the Singkarak hydropower tunnel, meanwhile bilih in Lake Toba is the result of introductions made in 2003.

2.2 Smoking

There are three purposes of fish smoking. First, serving the processed fish for immediate consumption. Second, giving distinctive taste that is preferred by consumers. Third, providing longer storage period by heating, drying and smoking (chemical reaction) to the fish's flesh tissue during the smoking process [3].

According to [4], smoke can act as a preservative if the components of smoke seeped into the material smoked. The substances contained in smoke is an

ingredient that can inhibit the growth of bacteria (bacteriside). The main compounds that act as antimicrobials are phenolic compounds and acetic acid, its role is increasing when the two compounds exist together. In food products, flavor and aroma of smoked products are also caused by carbonyl compounds and phenols.

On the technology of farmers, fish is cleaned by removing the gills and belly, dusted and drained. Furthermore, fish is arranged in a bamboo-shaped house by: an open smoking system. For the introduction of technology, the fish is cleaned by removing the gills and belly, dusted and drained 5-10 minutes to reduce the water content in fish. Furthermore, fish is prepared in a smoke house on the shelves store by: closed smoking system. During the smoking on (0-8 hours) the temperature is set on 65º C, and on 8-12 hours later the temperature is set on 80 ° C. The fuel used is wood as a starter.

3. RESEARCH METHOD

3.1 Materials and tools

The materials used for making smoking tools of fish in the study are: heat resistant glass (length 73 cm x width 58 cm), aluminum-shaped nets (length 73 cm x width 64 cm), aluminum (length 95 cm x width 70 cm x height 70 cm), drum (41.20 cm (diameter) x 44 cm (height), brackets (length 95 cm x height 110, width 60 cm x 70 cm) and the door hinges. Tools used are: grinder, gauge, angled ruler. While the tools and materials used for the technical examination is bilih, salt, scales, fuel (coconut fiber) and a thermometer.

3.2 Research procedure

In this study, there are several stages, namely: 1). Designing smoking tool using solid work applications (Figure-1), 2). Observations on the materials used to make smoking tools, 3). Making smoking tools, 4). Technical testing on smoking tool that has been made.

3.3 Technical test on Bilih Smoking Equipment

Phase testing tools as follows: (1) fish that has been soaked by: salt water are arranged on shelves, (2) the fuel used in the stove is added, (3) observation of smoking results from minute 0 to the evaporation process is completed. The materials used as fuel is agricultural waste, the coconut husks. Analysis conducted is nutritional value analysis including the water content gravimetric method [5], dust content using gravimetric method [5], the protein content using Micro Kjedhal method [5], fat content using Soxhlet method [5], and carbohydrates using different methods.

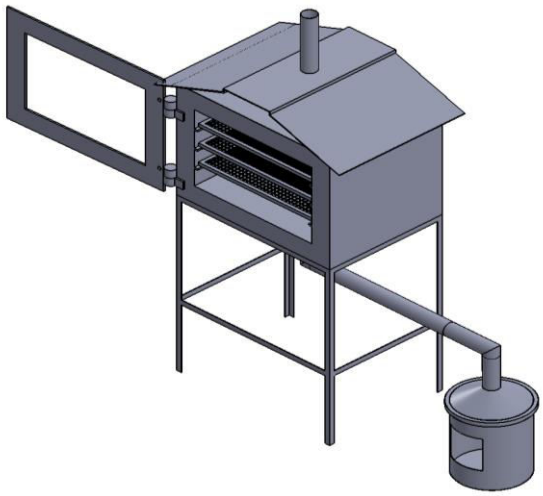

Figure-1. Bilih smoking equipment.

3.4 Economic analysis application on smoking equipment

3.4.1 Smoking equipment Fixed Costs

The fixed costs can be calculated using the formula:

$$BT = D + I \quad (1)$$

By:
BT = fixed costs smoking tool (Rp/year)
D = depreciation (Rp/year)
I = interest on capital (Rp/year)

$$D = \frac{(P-S)}{N} \quad (2)$$

By:
P = smoking tool price(Rp)
S = value = 10% end tool (P) (Rp)
N = age economical tool (years)

$$I = \frac{r\ x\ (P+S)}{2} \quad (3)$$

By:
r = interest rate on bank

3.4.2 Smoking equipment variable costs

Variable cost is calculated by the formula:

$$BTT = PP + Bo + BB \quad (4)$$

By:
BTT = variable costs of smoking tool (Rp/hour)
PP = cost of repairs and maintenance (Rp/hour)
Bo = operator hourly wage (Rp/hour)
BB = fuel costs (Rp/hour)

$$PP = \frac{2\ \%\ (P-S)}{100\ hour} \quad (5)$$

$$Bo = \frac{workers\ fee\ (\frac{Rp}{day})}{working\ time\ (\frac{hour}{day})} \quad (6)$$

$$BB = \frac{Fuel\ Amount\ (kg) x\ Fuel\ Cost\ (\frac{Rp}{kg})}{Smoking\ duration\ (hour)} \quad (7)$$

3.4.3 Smoking Cost

Smoking cost is calculated using the formula:

$$BP = \frac{\{(\frac{BT}{n})+BTT\}}{KP} \quad (8)$$

By:
BP = cost of smoking (Rp/kg)
n = hours in a year (hour/year)
KP = working capacity of tools (output kg/hour)

Capacity = Output (kg) / Time Process (hour) (9)

3.4.4 Total Cost

The total cost of production of smoked fish bilihcalculated using the formula:

$$TC = BT + \left(\frac{BTT}{KP}\right) X \quad (10)$$

By :
TC = total Cost (Rp/year)
X = tool capacity (kg/year)

3.4.5 Total Revenue

Total Revenueis calculated by the equation:

$$Rendemen = \frac{Ouout}{Input} x\ 100\ \% \quad (11)$$

$$\text{The price of dried bilih per 1 kg} = \frac{Fresh\ bilih\ price\ (Rp)}{Efficiency} \quad (12)$$

Selling Price = dried bilih Price (Rp/kg) + Cost of (Rp/kg) + (10% x Cost of (RP / kg)) (13)

$$TR = (Selling\ price\ (\frac{Rp}{kg}) - \left(\frac{Raw\ material\ price\ (\frac{Rp}{kg})}{Efficiency}\right) X \quad (14)$$

3.5 Feasibility analysis on smoking equipment application

A production activity is eligible if the Net Present Value (NPV)> 0, or the B / C ratio> 1. The financial viability can be determined from:

$$NPV = \sum_{t=1}^{n} \frac{B_t - C_t}{(1+i)^t} \quad (15)$$

$$\frac{B}{C} ratio = \sum_{t=1}^{n} \frac{B_t}{(1+i)^t} / \sum_{t=1}^{n} \frac{C_t}{(1+i)^t} \quad (16)$$

By:
NPV = net present value (Rp)
Bt = incoming dust flow in year t (Rp)
Ct = dust flow in year t (Rp)
t = year to-t
i = interest rate (%/year)
n = age of economic tools (year)

3.6 Break even point of smoking equipment operational

The breakeven point is calculated by the equation:

BEP = BT / {HJ - (HB / ή) - (BTT / KP)} (17)

by:

BEP = break even point (kg/year)
HJ = smoked bilih selling price (Rp/kg)
HB = fresh bilih purchase price (Rp/kg)
ή = rendemen

4. RESULTS AND DISCUSSIONS

Bilih smoking tool use multilevel shelving system by: smoke intake holes that exist on both sides of the right and left walls of the smoking cupboard which aims to give the even smoking. Temperatures during the smoking process is between 60 ^{0} C - 80 ^{0} C, by: 6 hours smoking time. Smoked bilih generated have a good quality (yellow browish and there was no physical damage on smoked bilih).

4.1 The analysis of Smoked Bilih's nutritional value

Based on proximate analysis on fresh bilih smoked bilih, the moisture, dust, protein, fat, and carbohydrates are generated, as in Table-1.

Table-1. Chemical composition of processed Lake *Singkarak*'sBilih.

Chemical composition	Fresh Bilih[a)]	Smoked Bilih
Water content (%)	81.45±2.77	14.85±0.06
Dust content (%)	2.64±0.08	11.61±0.03
Protein Content (%)	7.96±0.88	60.14±1.16
Fat level (%)	1.92±0.33	12.14±0.01
Carbohydrate Content (%)	6.03±1.64	1.26±1.06

a)[5]

Standard water content of smoked fish according to Indonesian National Standard (SNI) is 60% (maximum) [3]. The water content of smoked fish produced is 14.85 ± 0.06%, and has met the SNI value. The declining in water content of a material impact on the increased concentration of the nutritional content of the material [6]. The decrease in water content caused by the evaporation of the product due to the influence of temperature on the smoking tool.

In Table-1 we can see, protein content (60.14 ± 1.16%) and fat content (12.14 ± 0.01%) in bilih is increased after smoking. It is due to decreased water

content of the material. The amount of the protein content of smoked fish is strongly influenced by the condition of the fish and how smoking is used. Protein levels in smoked fish are not specified by SNI smoked fish. The percentage of protein content standard used is the value of egg protein levels, at 12.9% [6].

The dust content in smoked bilih produced also increased. This increase to [7] occurs due to precipitation of mineral elements contained in the salt during the soaking in a salt solution. This fits well as stated by [7], dust content related to mineral materials. Minerals contained in the material are two kinds of salt, organic and inorganic salts. Mineral components in the material can be quantified by determining the burning remnants of mineral salts which known as incineration.

4.2 Economic analysis of Bilih Smoking tool

The data required for financial analysis is obtained from interviews with fishermen's groups of Nagari Singkarak and by conducting technical tests of smoking tool at the study site. Data and results of the economic analysis are presented in Tables 2 and 3.

Table-2. Economic analysis tool of Lake *Singkarak's* Bilih Smoking Tool.

No.	Description	
1	Equipment price (Rp)	3,500,000
2	Economic life of the tool (year)	5
3	Interest rate (%)	8
4	Hours of work (hour/day)	8
5	Weekdays (day/week)	3
6	Capacity (kg/hour)	0.12
7	Workers fee (Rp/day)	60,000
8	operator charges	7,500
9	Fuel charger (Rp/kg)	100
10	Smoking duration (hour)	6
11	The amount of fuel (kg)	5
12	Fresh bilih price (Rp/kg)	40,000
13	Tool's efficiency	0.20

Table-3. Results of economic analysis of Bilih Smoking tool.

No.	Description	Total
1	Fixed Cost (Rp/year)	748,000.00
2	Variable cost (Rp/hour)	8,213.33
3	BiayaPokok (Rp/kg)	74,115.74
4	Cost of goods (Rp/year)	11,270,336.00
5	Bilih production cost (Rp/year)	10,245,760.00
6	Net Income (Rp/year)	1,024,576.00

Fixed cost of smoking tool should be spent even though the appliance is not operating. Fixed cost remains the same every year; it didn't depend on amount of smoking. Fixed costs and variable costs smoking tool are used to calculate the basic cost of producing smoked bilih, i.e. Rp 74,115.74 / kg. The results of a financial analysis tool use fish smoking bilih is presented in Table-4.

Table-4. The analysis of the Bilih Smoking tool's financial feasibility.

Year	Benefit	Cost	DF	Present benefit	Present cost
1	11,270,336.00	10,245,760.00	0.93	10,435,496.30	9,486,814.81
2	11,270,336.00	10,245,760.00	0.86	9,662,496.57	8,784,087.79
3	11,270,336.00	10,245,760.00	0.79	8,946,756.08	8,133,414.62
4	11,270,336.00	10,245,760.00	0.74	8,284,033.41	7,530,939.46
5	11,620,336.00	10,245,760.00	0.68	7,908,605.43	6,973,092.10
			Total	45,237,387.79	40,908,348.79
			NPV	4,329,039.00	
			B/C Ratio	1.11	

Net Present Value (NPV) is the difference between the present value benefit and the present value benefit costs. NPV value use of smoking bilih with a discount factor of 8% is Rp. 4, 329, 039.00. This value shows the net result (net benefit) received over the next 5 years, as measured by the present value. Net Benefit Cost Ratio (Net B/C) is the ratio between the positive NPV and negative NPV value. Net value B/C for bilih smoking tool is 1.11.

A production activity is considered eligible if the value of Benefit Cost Ratio (B/C Ratio)> 1 and Net Present Value (NPV)> 0. According to Table-4, the use of bilih smoking tool as one of the innovative work in maintaining the quality of the fish and extend bilih's safe period is financially viable because it has a B/C Ratio> 1 and NPV> 0.

4.3 Break event point of Bilih Smoking equipment operational

The breakeven point is a state where an operation activities have no profit or loss / breakeven (earnings = total costs). Break-even analysis is required to determine the relationship between the volume of production, sales volume, sales price, production costs, other costs both fixed and variable, as well as profit or loss. Breakeven operasional point of bilih smoking tool was 59.93 kg / year. It means that the bilih smoking that has been done for 6 hours had no profit and no loss or break even if production were obtained at 59.93 kg/year. The production obtained after 6 hours smoking is at 138.24 kg / year. This means smoking bilih generated benefits.

5. CONCLUSIONS

From the results of technical tests of smoking tools, the bilih produced have a good quality (yellow brownish and had no physical damage). The nutritional value of smoked bilih generated was 14.85 ± 0.06% (moisture); 11.61 ± 0.03% (dust); 60.14 ± 1.16% (protein content), 12.14 ± 0.01% (fat), and 1.26 ± 1.06% (carbohydrate). The results of the economic analysis of the smoking tool is the tool is appropriate because it has a value of B/C ratio> 1 and NPV> 0, i.e. 1.11 and 4, 329, 039.00.

REFERENCES

[1] Refildadan Indawati. 2009. Penyuluhan Penggunaan Garamdan Asap cairuntuk Menambah Cita Rasa danKualitas Ikan Bilih (Mystacoleusecuspadangensis) dari Danau Singkarakdalam Meningkatkan Perekonomian Rakyat. Warta Pengabdian Andalas. 15(23): 167-178. Sumatera Barat: Universitas Andalas.

[2] Nofrita, Dahelmi, HafrijalSyandri, DjongHokTjong. 2013. Hubungan Tampilan Pertumbuhandengan Karakteristik Habitat Ikan Bilih (Mystacoleusecuspadangensis Blekeer). Prosiding Semirata FMIPA. 179-184. Lampung: Universitas Lampung.http://jurnal.fmipa.unila.ac.id.

[3] Sulistijowati, Rieny. S., OtongSuharaDjunaedi, Jetty Nurhajati, Eddy Afrianto, dan Zalinar Udin. 2011. Mekanisme PengasapanIkan. Bandung: UNPAD Press.

[4] Irlinda R. 2014. Hubunganantara Paparan Asap dngan Kejadian Pembesaran Gingiva (Studipada Pekerja PengasapanIkan di Desa Bandarharjo, Kota Semarang, Jawa Tengah). Semarang: Universitas.

[5] Permata, DeivyAndhikadanWenny Surya Murtius. 2015. KandunganZatGizi Dan BakteriProteolitik Pada Produk Olahan Ikan Bilih. Jurnal Teknologi Pertanian Andalas. 19(1). http://tpa.fateta.unand.ac.id.

[6] Mardiana, Novita., Sri Waluyo., danMahrus Ali. 2014. Analisis Kualitas Ikan Sembilang (Paraplotosusalbilabris) Asap di Kelompok Pengolahan Ikan "Mina Mulya" Kecamatan PasirSakti Lampung Timur. Jurnal Teknik Pertanian Lampung Vol. 3 No. 3. http://jurnal.fp.unila.ac.id.

[7] Swastawati, Fronthea., TitiSurti, Tri Winarni Agustini., dan Patut Har Riyadi. Karakteristik Kualitas Ikan Asap yang Diproses Menggunakan Metodedan Jenis Ikan Berbeda. 2013. Jurnal Aplikasi Teknologi Pangan. 2(3). http://journal.ift.or.id.