VOL. 12, NO. 13, JULY 2017 ISSN 1819-6608
ARPN Journal of Engineering and Applied Sciences

www.arpnjournals.com

IMPLEMENTATION OF PARAMETERS MONITORING AND CONTROLLING SYSTEM USING WIRELESS COMMUNICATION

K. Karthikumar, M. Karuppiah, A. Arunbalaj, S. Krishnakumar and P. Sathyanathan
Department of Electrical and Electronics Engineering, Vel Tech, Avadi, Chennai, India
E-Mail: karthikumar@veltechengg.com

ABSTRACT

Nowadays the automation has become a basic need for emerging technologies. Motors are the nerves of many industries. Hence Industrial automation is required for precise and accurate operation. This project proposes a wireless control and monitoring system for various industrial machines based on Zigbee communication protocol for safe and economic data communication in industrial fields where the wired communication is more expensive or impossible due to physical conditions. Sensor module is used to monitor the parameters of any industrial machine and transmit the data through Zigbee Protocol. In case of fault in the main machine, the controller analyse the data from sensor and automatically sends signal to the alarm circuit and relay circuit which switches to standby machine and also monitors the parameters. ARM processor based system is used for collecting and storing data and accordingly transmits the information to the control room through computer interface and stores the data periodically. A prototype and simulink model is developed and tested to verify the performance of this proposed system.

Keywords: industrial machine, zigbee protocol, ARM processor, parameters monitoring, automatic ON-OFF control.

1. INTRODUCTION

Single Phase and Three Phase Industrial machines are very popular in industries because of their vast applications. Hence it becomes necessary to protect them against faults so as to ensure uninterrupted operation and functioning 1.Various parameter controlling and monitoring systems are there for other types of machine, but in case of industrial machine the controlling and monitoring systems are not extensively used due to high cost of installation and physical constraints. So as to overcome the limitations in monitoring and controlling, Zigbee Based System is used which makes it cost-effective and simple on the other hand2. To start with, first we should know what Zigbee Protocol is. Zigbee is a wireless communication device like Bluetooth and Wireless Local Area Network (WLAN)3. Basic difference between Zigbee and other communication protocol is that all Zigbee devices relay each other's traffic, bypassing the wired network entirely. While Bluetooth devices connect to another wireless that acts as a hub and WLAN devices connect directly to an access point, which is wired to the enterprise network using Ethernet. The Institute of Electrical and Electronics Engineers (IEEE) developed 802.15.4 standards and helped the production of Zigbee protocol and devices that support this protocol. The disadvantage of using traditional systems is that it increases the cost whereas digital systems reduce the cost of system. The basic structure of Zigbee based parameter monitoring and controlling system consists of ARM processor and acts as transmitter for the other microcontroller and Zigbee device which processor and Zigbee device, one set of ARM processor and Zigbee device are near industrial is near the computer where the parameters are displayed on computer using software application. In addition to Zigbee Device various other sensors are used for measuring different parameters. Wireless sensor network (WSN) system are autonomous and operate unattended also adaptive to the environment.

2. ABOUT ZIGBEE TECHNOLOGY

2.1 Wireless sensor network

Wireless sensor network system are autonomous and operate unattended also adaptive to the environment. The wireless system for monitoring purpose will not only reduce the overall monitoring system cost in term of facilities setup and labor cost, but always provide flexibility in system in term of distance or location. So these systems are widely used in military, hospitals, home and other commercial areas. According to these aspects the ZigBee becomes the new standard intended for low cost devices in automation, computer peripherals and home controls. ZigBee standard performs well at industrial environments the fundamental design and implementation of WSN featuring a high power transmission Zigbee based technology4. The developed platform is cost-effective and allows easily in WSN systems and as well as the effect on reducing energy consumption

2.2 ZIGBEE network structures

There are three network topologies which are used. They are Star Network, Cluster- Tree Network and Mesh Network5. Different network topologies built up by Zigbee devices like star topology, cluster tree topology and mesh network. For all network topologies, there can be only one coordinator in each network. In star topology there is a coordinator which is responsible for all over the network. All other devices are back-end devices and directly communicate with the coordinator. This topology is suitable for networks with a centralized device and for time critical applications. Next is a cluster tree network where coordinators are still responsible for the Network initiating and maintenance. However, routers can be used to extend the network. Routers control data flow by using hierarchical routing strategies in the network. They also may imply beacon enabled network that is defined in IEEE 802.15.4 for periodical data transmission. In mesh network coordinator is seen as responsible for the network initiating and maintenance. Routers can be used to extend the network. A mesh network allows full peer to- peer communication.

3. PROPOSED SCHEME

This section gives the overview of the monitoring and controlling scheme of industrial machine using wireless communication. A general block diagram of the proposed scheme is given in Figure-1. The whole system is divided into two parts- transmitter and receiver. In the transmitter part a network of sensor and transducers are used to monitor the risky parameters such as voltage, current, temperature of stator winding and speed of the industrial machine present at the plant location. The monitoring data is simultaneously fed to the ARM processor.

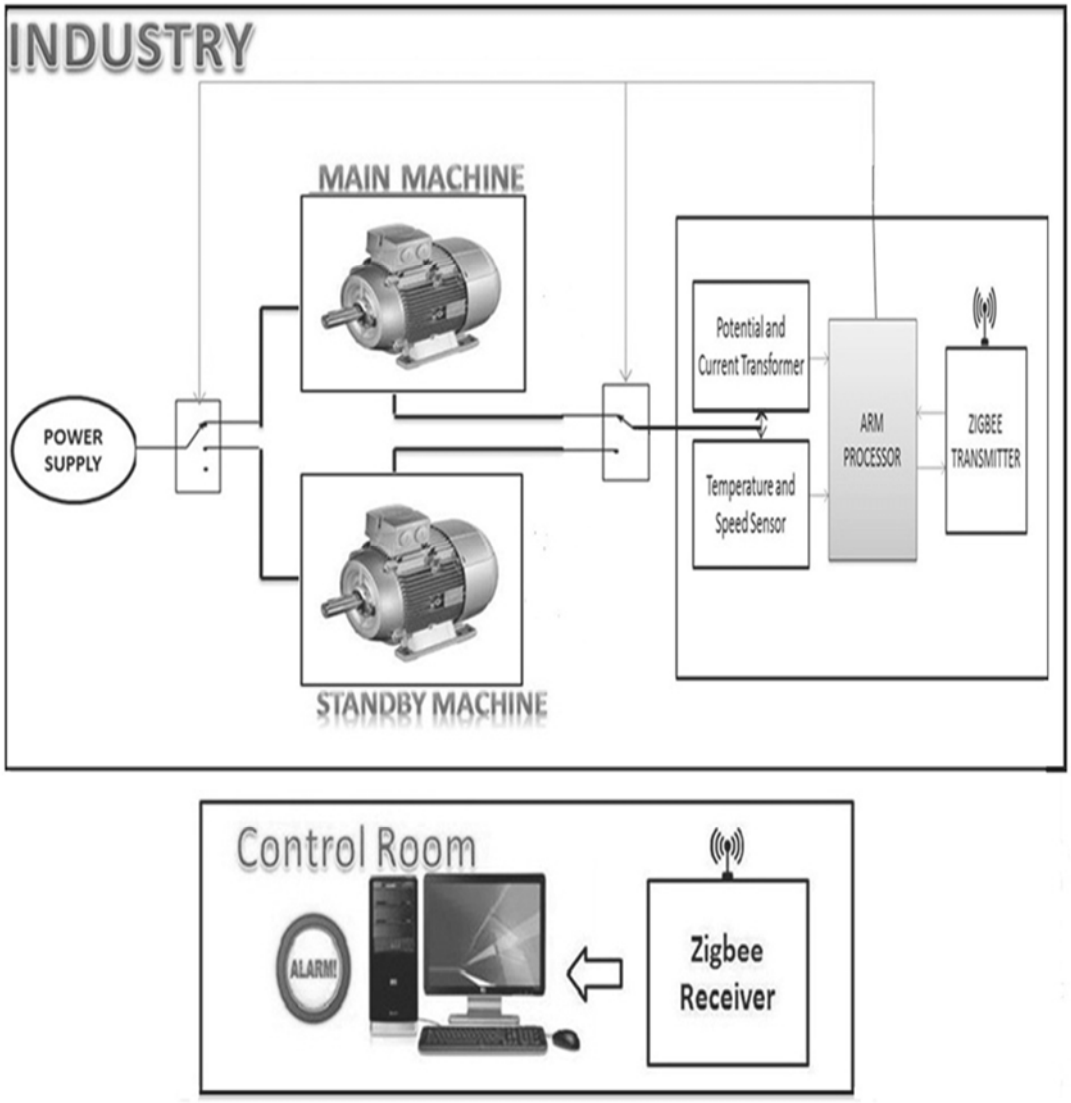

Figure-1. A general block diagram of monitoring and controlling scheme.

This data is transmitted efficiently and smoothly to receiver end through wireless Zigbee Communication Protocol (IEEE802.15.4 Standards). The ARM processor at the transmitter end is so programmed that if the monitoring parameters of industrial machine come out of the desired or safety limit, a signal will be generated by the ARM processor which will energize the relay circuit to trip the supply into standby machine. If Standby machine starts run, automatically the parameter of standby machine also monitored. If fault occurs in both machines the contractor cuts the mains supply to the industrial machine. The data received at the receiver end is transferred to computer system through Labview Software.

Thus a continuous monitoring of the parameters of industrial machine can be done from a remote location far away from the actual working location. If the user anytime wants to Start or stop the industrial machine, a signal will be given by the computer system present at the receiver end, which is communicated at the transmitter end through Zigbee protocol. In turn the ARM processor unit present at plant location generates a signal which energizes and de-energizes the relay circuitry to stop and start the industrial machine respectively. Thus this system not only monitors the operation of industrial machine but also protects it from the severe faults that commonly occur.

4. HARDWARE DESIGN

This section gives the hardware description of the elements making up the Monitoring and controlling system of industrial machine with Zigbee connectivity. The hardware design mainly divided into two modules:

- Transmitter Module
- Receiver Module

4.1 Transmitter module

4.1.1 Monitoring unit

This unit consists of several sensors and transformer circuit used to detect the predetermined parameters of the industrial machine. In this work, we mainly monitor four parameters of industrial machine that are Voltage, Current, Temperature of Stator Windings and Speed of Operation.

4.1.1.1 Voltage monitoring

The output V1 of the transformer is fed to voltage transformation unit which transforms the input voltage into 5 voltsrange. First, a 220V/6V step-down transformer is used to transform Vin into a lower ac voltage V1.
i.e., V1=(6/220)*Vin

Voltage transformation unit consists of diode, Zener diode and resistive divider network.

4.1.1.2 Current monitoring

Current transformer produces a reduced current accurately proportional to the current in the circuit, which can be conveniently connected to transformation unit. The CT is typically described by its current ratio from primary to secondary. The current flowing through the industrial machine can be easily monitored using transformation unit

4.1.1.3 Temperature monitoring

Temperature of stator winding can be measured through Dallas DS1820 Direct to digital temperature sensor. The Dallas Direct-to-Digital Temperature Sensors measure temperature through the use of an onboard proprietary temperature measurement technique.

4.1.1.4 Speed monitoring

Speed of revolution of industrial machine can be measured using proximity sensor. A proximity sensor is a sensor able to detect the speed of a machine without any physical contact. Inductive Proximity Sensors detect magnetic loss due to eddy currents that are generated on a conductive surface by an external magnetic field.

An AC magnetic field is generated on the detection coil, and changes in the impedance due to eddy currents generated on a metallic object are detected. Proximity sensors can have a high reliability and long functional life because of the absence of mechanical parts and lack of physical contact between sensor and the sensed object.

4.1.2 Controller unit

4.1.2.1. ARM processor

Heart of this project is ARM Processor. ARM is one of the most licensed and thus widespread processor cores in the world. It is used especially in portable devices due to low power consumption and reasonable performance (MIPS / watt). It is a family of RISC architectures. “ARM”is the abbreviation of “Advanced RISC Machines”. It does not manufacture its own VLSI devices. ARM7- Von Neuman Architecture, ARM9 - Harvard Architecture. The ARM7TDMI processor has seven modes of operations: -User mode(usr),Normal program execution mode, Fast Interrupt mode (fiq), Supports a high-speed data transfer or channel process, Interrupt mode(irq),Used for general-purpose-interrupt handling Supervisor mode(svc), Protected mode for the operating system. Abort mode (abt), implements virtual memory and/or memory protection, System mode (sys), a privileged user mode for the operating system. (Runs OS tasks), Undefined mode (und), supports a software emulation of hardware coprocessors, except user mode, all are known as privileged mode. The ARM instruction set designers have made good use of this extra latency by adding *auto-indexing* capability to ‘load’/‘store’ instructions. Since the ALU and barrel-shifter would otherwise be idle during the data-word cycle (#4) of the ‘execute’ stage, they can be used to add an offset (index) to the base register. By programming the Arm processor with the help of C language the following actions are developed:

- Receives signals from Sensors and transformer unit

- Identify the voltage, current, speed temperature limit under the specification of particular industrial machine.
- If any fault detect send signal to Relay Ciruit-1 and trip to standby machine.
- If the Standby machines start it gives instructions to relay circuit-2 to monitors the parameters of standby machine.
- It also gives signals to the Alarm circuit in the Control Room.
- Data transmits received by this controller must be saved periodically.

4.1.2.2. Relay circuit

This project proposes a new scheme of using a standby machine. Many of the industries such spinning mills, leather industries need continuous load supply. In such industries, that always provided with a standby machine along with main machine. If any fault occurs in the main machine such as over voltage, under voltage, over current, over heating can be detected by controller it sends signals to the relay circuit-1 which trip the circuit into standby machine. Also we provide a relay circuit-2 to monitor the parameters of standby machine when it start runs. If both machines get into fault, the relay ciruit-1 cuts the power supply.

4.1.3 ZIGBEE transmitter

The ZigBee RF Modules are designed to operate within the ZigBee protocol and support the unique needs of low-cost, low-power wireless sensor networks. The modules require minimal power and provide reliable delivery of data between remote devices. The modules operate within the ISM 2.4 GHz frequency band. It operates over a range of 100-200 meters.

4.2. receiver module

4.2.1. ZIGBEE receiver

The receiver module consists of a Zigbee RF module which is connected to computer system through Labview software. The receiver works in three steps: packet detection, synchronization, and data recovery. At the packet-detection stage, other blocks are turned off until the packet is detected. At synchronization, the carrier frequency synchronization block is turned on to estimate frequency error by preamble, and the phase compensation block works for phase rotation. The dispreading block collects the packet information. Finally, at the data-recovery stage, symbol-to-bit block recovers the data bit stream for media access control (MAC). Thus the monitoring data received by Zigbee module is directly transferred to computer system. The data received by the receiver can be stored in the computer periodically.

4.2.2. Software

Data received by the Zigbee is displayed in the computer system with the help of LabVIEW Software. LabVIEW (short for Laboratory Virtual Instrument Engineering Workbench) is a system-design platform and development environment for a visual programming language from National_Instruments. Execution is determined by the structure of a graphical block diagram (the LabVIEW-source code) on which the programmer connects different function-nodes by drawing wires. These wires propagate variables and any node can execute as soon as all its input data become available. Since this might be the case for multiple nodes simultaneously, Multi-processing and multi-threading hardware is automatically exploited by the built-in scheduler, which multiplexes multiple OS threads over the nodes ready for execution. A key feature of LabVIEW is the extensive support for interfacing to devices such as instruments, cameras, and other devices. Users typically interface to hardware by either writing direct bus commands (USB, GPIB, Serial...) or using high-level, device-specific, drivers that provide native LabVIEW function nodes for controlling the device. National Instruments makes thousands of device drivers available for download on the Instrument Driver Network (IDNet).

4.2.3. Alarm circuit

An alarm circuit is included in the receiver module to alert the operator in the control room. Whenever the monitored parameters steps into the critical value beyond normal working range (like over voltage, over current, overheating) the ARM Processor sends signals to trip alarm which enables the operator to notice that the machine is in abnormal condition. Once the alarm is tripped, after some delay the alarm turns off and the relay circuit gradually switches to the standby machine; meanwhile the time, when the alarm has been activated is stored in the database for future information.

5. SIMULATION

The Simulation of parameters such as voltage, current, speed are monitored using MATLAB. The following result shows the modelling and output waveform

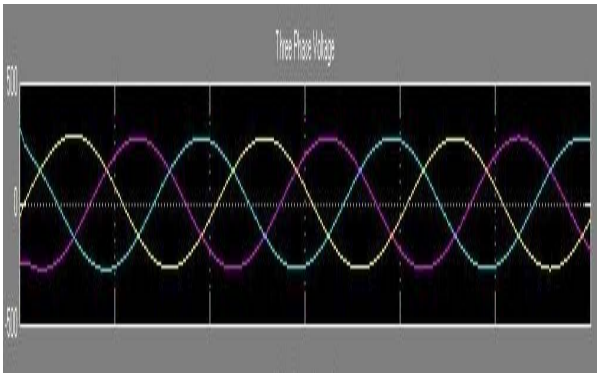

Figure-2. Three phase voltage.

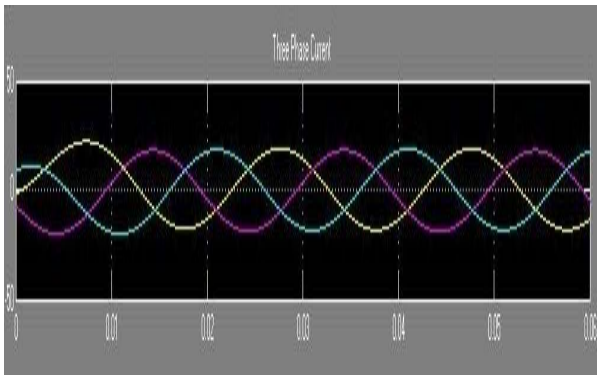

Figure-3. Three phase current.

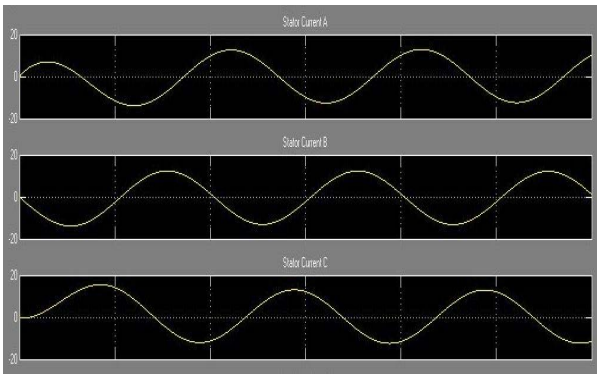

Figure-4. Stator current.

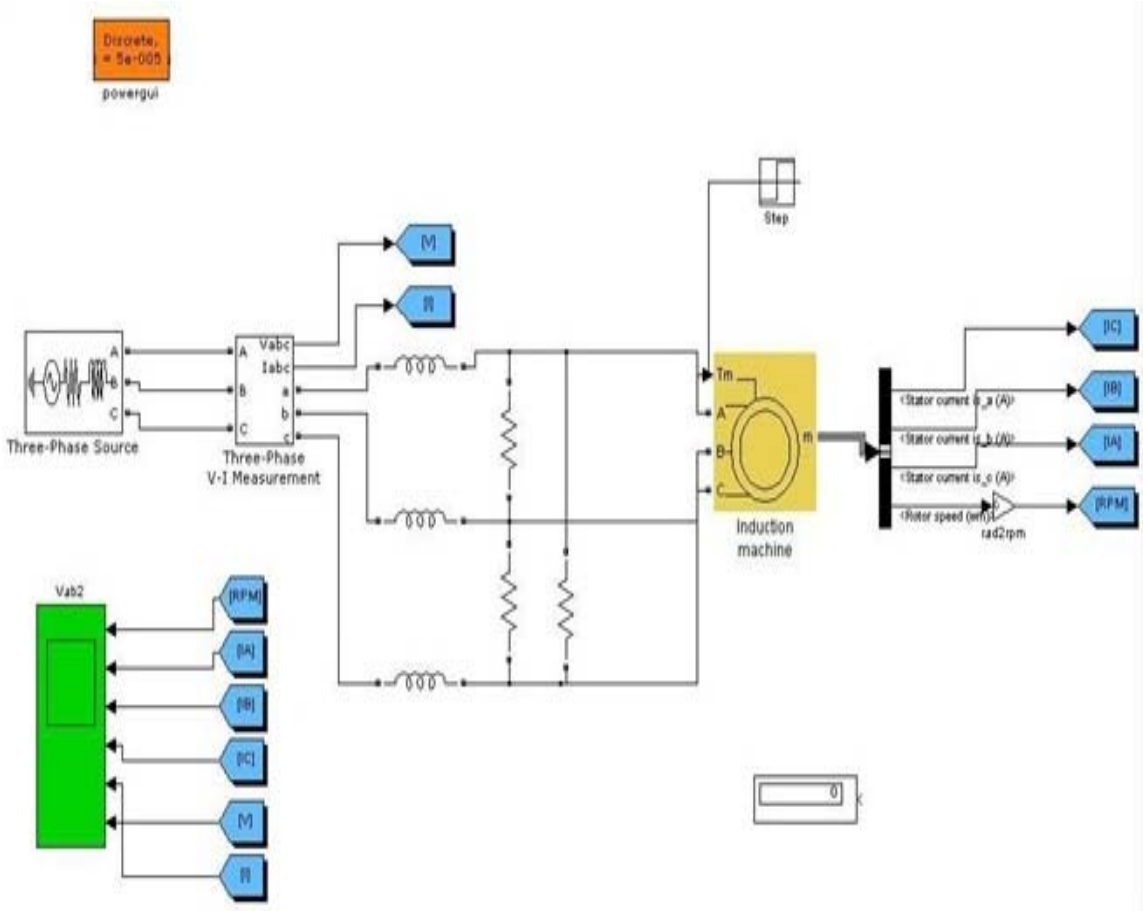

Figure-5. Modelling of parameters monitoring of induction machine using Matlab Simulink.

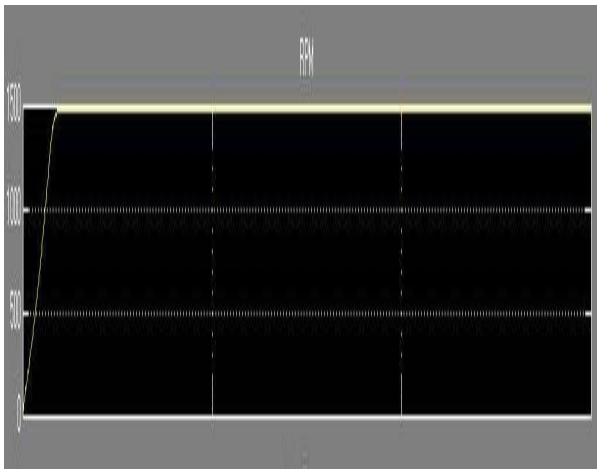

Figure-6. Speed.

6. CONCLUSIONS

With the help of this study, a parameter monitoring system for industrial machines based on Zigbee protocol is achieved and tested successfully. The system developed is capable to perform such operations as running the motor through RF, stopping it, measuring, monitoring and controlling the most parameters of the motor like phase currents, phase voltages, wiring temperature, speed. All of these values can be transferred to the host computer, displayed on the interface, represented graphically; Monitoring and controlling the basic parameters of the industrial motors were examined and achieved in various ways. A new ZigBee technology is a new wireless protocol is used for the communication. This protocol is widely used various areas for its better reliability, low power consuming profile, excellent Capability, high flexibility and low cost. So it's significant to embed the ZigBee protocol into the WSN system that widely applied now in every area. The system achieved can be used for industrial applications. The whole system may be very useful to any industries, colleges and research institutes that have vocational, technical, and industrial education.

REFERENCES

[1] TanmoyMaity, Parthasarathi Das and Mithu Mukherjee. Rescue and protection system for underground mine workers based on Zigbee. Int. Jr. Of Advanced Computer Engineering & Architecture 2(2) (June -December, 12).

[2] Jui-Yu Cheng and Min-Hsiung Hung, Jen-Wei Chang. 2007. A ZigBee-Based Power Monitoring System with Direct Load Control Capabilities. Proceedings of the 2007 IEEE International Conference on Figure.5. X-CTU setup Figure-6. Remote Configuration view on X-CTU software 602 TuesE04 Networking, Sensing and Control, London, UK, 15-17.

[3] A Comparative Study of Wireless Protocols: Bluetooth, UWB, ZigBee and Wi-Fi by Jin-Shyan Lee, Yu-Wei Su, and Chung-Chou Shen, Information & Communications Research Labs, Industrial Technology Research Institute (ITRI).

[4] F.L. Lewis. Wireless Sensor Networks-Chapter 4, Smart environments: Technologies, Protocols, and Applications Journal.

[5] Ramazan BAYINDIR, Mehmet ŞEN. 2011. A Parameter Monitoring System for Industrial Motors based on zigbee protocol. Gazi University Journal of Science. GU J Sci 24(4): 763-771.

[6] ZulhaniRasin, Mohd Rizal Abdullah. Water Quality Monitoring System Using Zigbee Based Wireless Sensor Network.

[7] M. Karuppiah, M. Sanyasi Rao and K. Karthikumar. 2014. Improved Transformer Based Full Bridge Inverter. International Journal of Engineering Research and Technology (IJERT). 9(8).

[8] M. Karuppiah, K. Karthi Kumar and A. Arunbalaj. 2014. The Residential Dc Power Distribution with Multi-Input Single-Control Systems. International Journal of Engineering Trends and Technology (IJETT). 17(4).

[9] K.Karthi Kumar and M.Karuppiah. 2015. PV & Wind Hybrid Output Power Generation and Control Fluctuation By Using Battery Energy Storage Station. International Journal of Trend in Research and Development. 02(2).

[10] K.Karthi Kumar and M. Karuppiah. 2015. Automatic Constant Wattage Auto Transformer Twin Test Station Using Mitsubishi PLC. International Journal of Trend in Research and Development. 02(2).

[11] K. Karthi Kumar M. Karuppiah and A. Arunbalaj. A Novel Relay Used For Fault Detection and Isolation in Distribution Networks Containing of Several DGS. International Journal of Trend and Development. 2(3): 2394-9333

[12] K. Fathima T. Mary Saranya S. Hema and M. Karuppiah. 2014. Step-Up Converter for Load Variation Using Zero Voltage Switching. International Journal of Applied Engineering Research (IJAER). 09(24).

[13] M. Karuppiah K. Karthikumar A. Arunbalaj L. Dineshbabu and S. Krishnakumar. 2015. Improved DC Power Distribution with Multi input Single Control System using Boost Converter. International Journal of Applied Engineering Research (IJAER). 10(3).

[14] K.Karthikumar V Senthilkumar M Karuppiah A Arunbalaj and S Krishnakumar. 2015. Modeling of Solar Panel as Genralised Structure. International Journal of Applied Engineering Research (IJAER). 14(3).