VOL. 12, NO. 16, AUGUST 2017 ISSN 1819-6608
ARPN Journal of Engineering and Applied Sciences

www.arpnjournals.com

DESIGN AND ANALYSIS OF VIBRATION ISOLATION PAD OF A HEAVY LOAD MACHINE AND TO PERFORM THE PROGRESSIVE RATE FREQUENCY ANALYSIS

A. Krishnamoorthy and M. Jayavel
School of Mechanical Engineering, Sathyabama University, Chennai, Tamil Nadu, India
E-Mail: mmjayavel@gmail.com

ABSTRACT

Vibration isolator is a material which is placed at the bottom of the small or heavy machineries in mechanical industries to reduce vibration of machine in dynamic condition. Recent years, the materials used in the isolation pad are elastomeric pads or mounts, helical steel springs, wire rope springs, and air springs. In this paper, we deal with increasing the performance of isolation pad from existing one by changing the design and material of the isolation pad. Existing design has a spring isolator and two new design models are created from the existing "Spring Isolator" model. The redesigned model has a helical spring with a parabolic shaped part, attached to it and the other model is helical spring with the spherical ball shaped part, attached to it. The design models have been designed in solid works. Static and dynamic analysis have been performed in ANSYS Workbench.

Keyword: vibration isolation, static analysis, dynamic analysis.

1. INTRODUCTION

Vibration isolation pad is the part which isolates a material, such as a piece of equipment, from the source of vibrations [13, 15]. Vibration isolation pad is used in many domains, mostly in engineered systems and comfortable spaces, and methods have been developed to prevent the transfer of vibration to such systems. Vibrations spread through mechanical waves and certain mechanical linkages conduct vibrations more efficiently than others [4]. Vibration isolation systems are of two types: active and passive vibration [1, 11]. A passive vibration is used with damping materials like spring, rubber pads elastomers and air isolators etc. and it is used for industrial equipment. Active vibration isolation system also contains a spring and a feedback circuit with a sensor, a controller and an actuator.

A vibration problem can be described based on the source - path - receiver model, which we have used in the noise control systems [2].

Source is a mechanical or fluid trouble, produced within the machine, such as unbalance, torque pulsations, gear tooth meshing, fan blade passing, etc. These characteristics occur at frequencies which are integer multiples of the rotating frequency of the machine.

Path is the structural or airborne path by which the trouble is transmitted to the receiver.

The receiver is the building resident or equipment/process that is damaged by vibration. The major amount of transmitted vibration take the form of either a high level of vibration they observe to be disturbing or alarming, or relatively small amounts of energy transmitted to building components that release as undesirable noise.

In this paper, an analysis has been done on the vibration isolation with the existing model [6] and two new models, which have been designed. For the analysis purpose, a heavy load press machine has been taken into consideration and static loads and dynamic loads of the machine was applied on the spring models and tested for the frequency absorption factor. The Heavy Load Press Machine, which has been used for analysis, causes more Vibration. The capacity of the existing to model absorb the frequency is less. So, the Resonance offered by the machine to floor causes an instability [8] to the machine and machine may collapse, which is overcame by changing geometrical parameters and provision of vibration absorption.

Based on that, two model is designed and compared with the existing model. The existing model had a vibration absorption provision of 4 helical springs, which is to be changed to one helical spring and 4 parabolic spring in one model and other model have one spring with elastomeric spherical ball made up of rubber plastic material.

Those two models are to compared with existing model in static loading condition and also the natural frequency of the model were to be concluded and also the dynamical impact condition of the models are illustrated with the features of heavy 200 ton press machine The main scope of the project is to increase the absorption capacity of existing vibration isolation pad with different model and also reduce the vibration transfer rate to ground by dynamical impact will be analyze.

2. DESIGN MODEL

A. Existing model

Solid works is used to design the model and Figure-1 shows the existing model of isolation pad with a spring isolator. In existing model, damper design with four helical spring [10] is used, and the materials used for the spring isolator is 201 annealed stainless steel. In upper and lower plate of damper, cast carbon steel is used and frame also uses the same material.

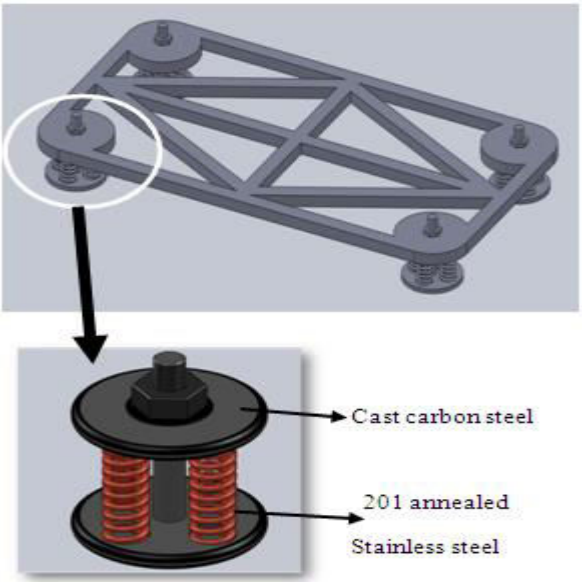

Figure-1. Existing model of isolation pad with spring isolator.

B. Redesign model 1

In this redesign model, four C or Bow Shaped geometry were introduced, which is made up of 201 annealed stainless steel [5, 7]. Material absorber, at the two end in the vibration isolation pad, is combined with this four bow shape design and one single helical spring. Bow shape and helical spring uses same material as shown in Figure-2. It is having an elastic limit of 170~310Mpa considering Hook Law, within the Elastic Limits, Stress Propositional to Strain. The SS Plate with thickness below 5mm bending in c shape, considering Elastic limit value, those it act as an impact absorber. It increase the efficiency and absorption frequency of the isolation pad when it combines both the spring and bow shape design.

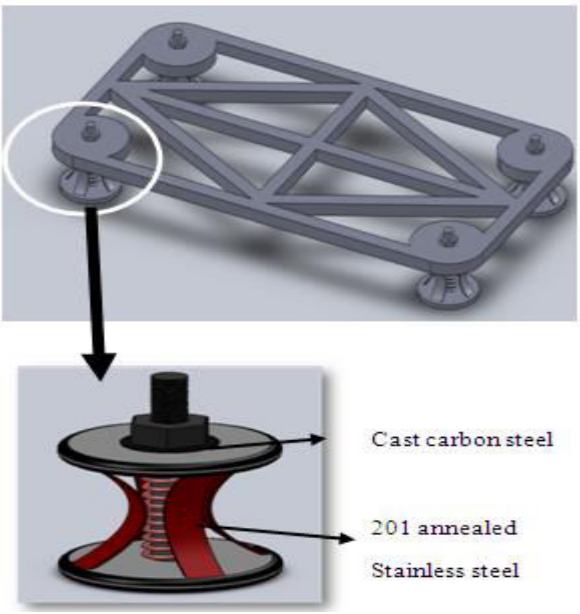

Figure-2. Redesign model of isolation pad with spring and bow shape.

C. Redesign model 2

Introducing hollow spherical geometry shape rubber plastic material absorber with single helical spring isolator of material 201 annealed stainless steel in the vibration isolation pad as shown in Figure-3. [14] Rubber plastic composing material having more elasticity which have more retention capacity of high impact load and it obeys hooks law. It has an elastic limit between 550 ~ 650mpa. The sphere geometry having two bow shape which is having naturally regaining properties to its original shape at the time of deformation. Combining spring retraction with those spheres, it increases the efficiency of the isolation pad.

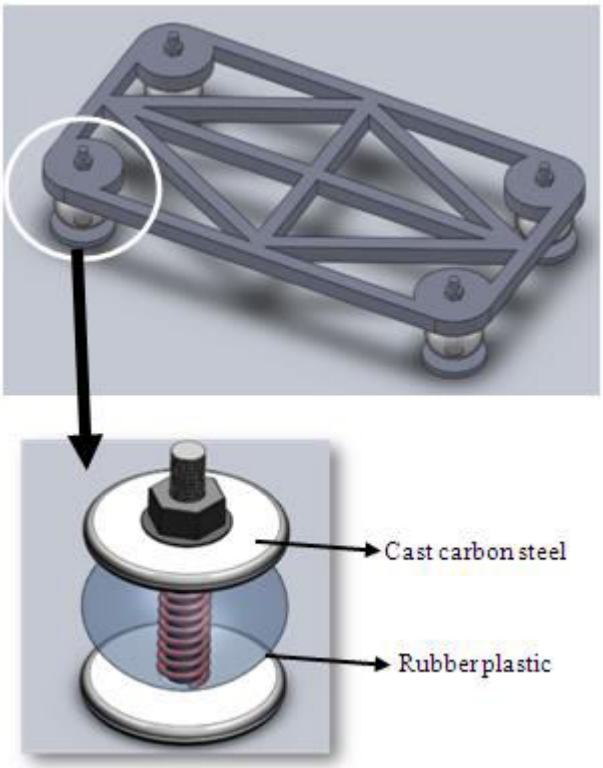

Figure-3. Redesign model of isolation pad with spring and hollow spherical shape.

3. MATERIALS USED

A. 201 annealed stainless steel

Application: It is used in structural members, different kinds of severely formed parts, suspension spring and siding and roofing for railway cars and trailers.

Advantages: It has good formability, corrosion resistance, and fabric ability.

B. Cast carbon steel

Application: Valve fittings Pump Parts, Fastener (Bolt, nut, stud and gasket), Automobile/Motorcycle Parts ,Pipe Fittings, Steel anchors, Food Processing Parts, Computer and communication Hardware; Sporting Equipment.

Advantages: It has making it malleable and ductile. Mild steel has a relatively low tensile strength, but it is cheap and easy to form; surface hardness can be increased through carburizing.

C. Rubber plastic

Application: Gloves (medical, household and industrial) are also large consumers of rubber plastic and toy balloons, although the type of rubber plastic used is that of the concentrated latex. Significant tonnage of rubber plastic is used as adhesives in many manufacturing industries and products, although the two most noticeable are the paper and the carpet industry.

Advantages: Rubber Plastic is ready to use right out of the container. Rubber Plastic is inexpensive, it exhibits good abrasion resistance, and is an elastic mold rubber. Because of its high elasticity.

4. MACHINE SPECIFICATION

Below the Table-1 values shows the machine specification of the GTX-200 Press Machine which used calculate the static and dynamic load values for analysis based on machine weight.

Table-1. Machine specification values.

Parameter	Value	Unit
Capacity	200	ton
Stroke	250	mm
SPM	20-50	spm
Die Height	500	mm
Maximum upper die weight	1500	kg
slide adjustment	120	mm
Bolster Area(w*l)	2200*940	mm
Bolster Thickness	160	mm
slide area (w*l)	1850*750	mm
slide plate thickness	75	mm
side opening(w*l)	900*600	mm
Main motor	25*4	hp*p
sliding adjusting motor	2*4	hp*p
Machine Weight	6	Ton

5. MATERIAL PROPERTIES

S No.	Material	Unit	201 annealed stainless steel	Cast carbon steel	Rubber plastic	Plain carbon steel
1	Elastic Modulus	N/m2	2.07E+11	2.10E+11	8.00E+08	2.00E+11
2	Poisson Ratio	-	0.27	0.32	0.49	0.28
3	Mass Density	Kg/m3	7860	7800	1500	7800
4	Tensile Strength	N/m2	685000000	248168000	16000000	220594000

6. STATIC ANALYSIS

Static structural analysis is used to calculate the load acting on the physical structure and their components. When the static analysis to perform stress, strain, displacement, deformation and forces on structure results based on load which we applied. For our three design models to calculate the static analysis based on the machine weight which is mentioned on machine specification Table-1.

Machine Weight(m_1) = 6000kg (Self Weight of Machine). Based on Self weight the Static LoadF_S= 6000 kg or 611.62N.

A. Existing model

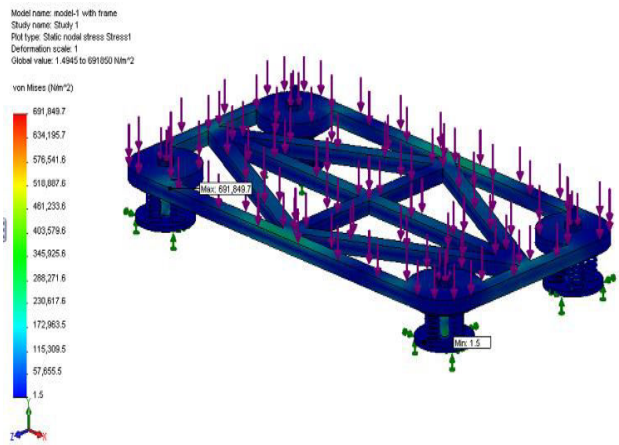

Figure-4. Stress analysis of existing model in isolation pad with spring isolator.

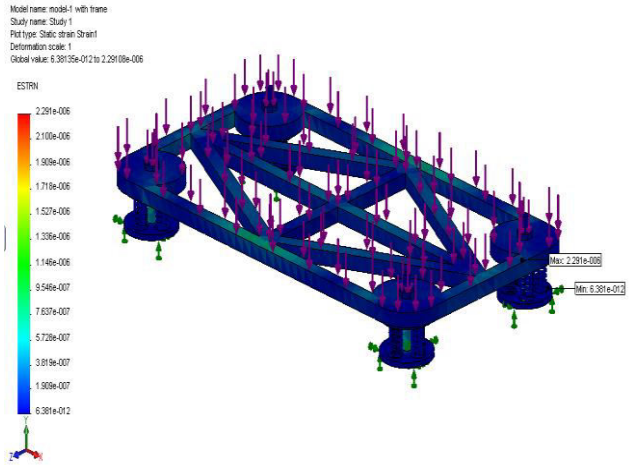

Figure-5. Strain analysis of existing model in isolation pad with spring isolator.

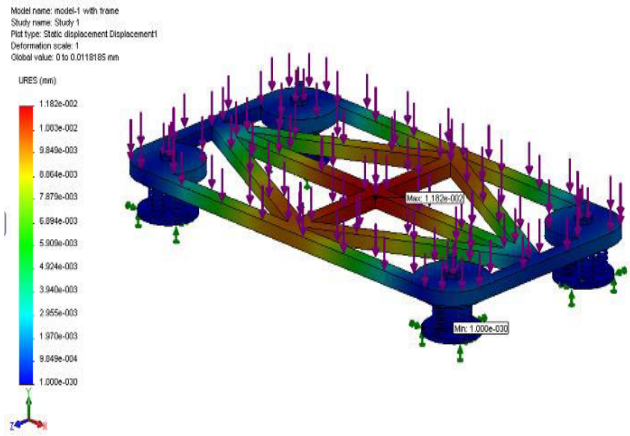

Figure-6. Displacement analysis of existing model in isolation pad with spring isolator.

B. Redesign model 1

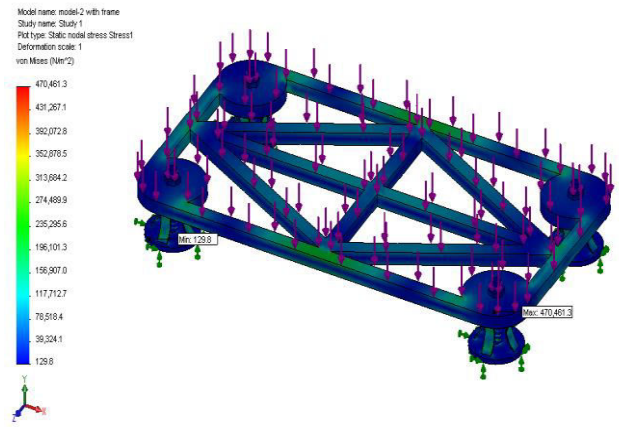

Figure-7. Stress analysis of redesign model in isolation pad with helical spring and bow shape design.

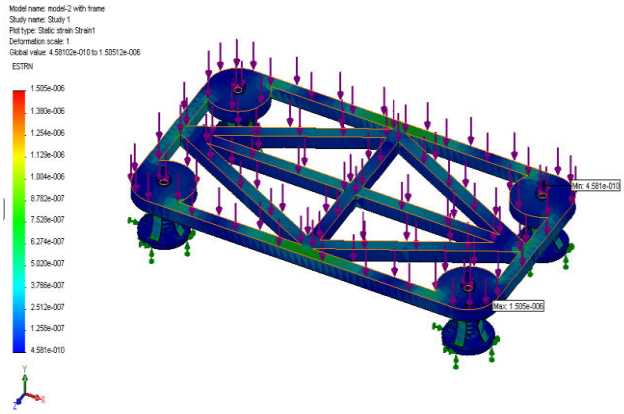

Figure-8. Strain analysis of redesign model in isolation pad with helical spring and bow shape design.

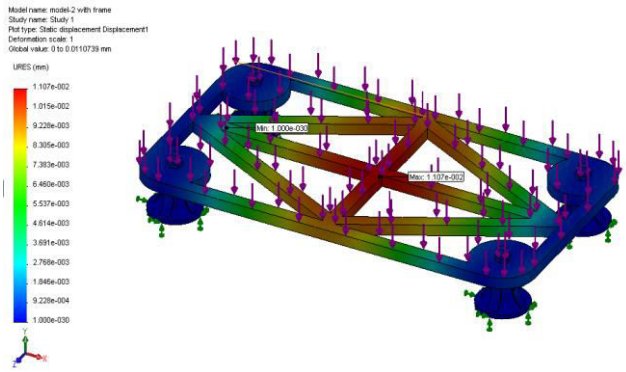

Figure-9. Displacement analysis of redesign model in isolation pad with helical spring and bow shape design.

C. Redesign model 2

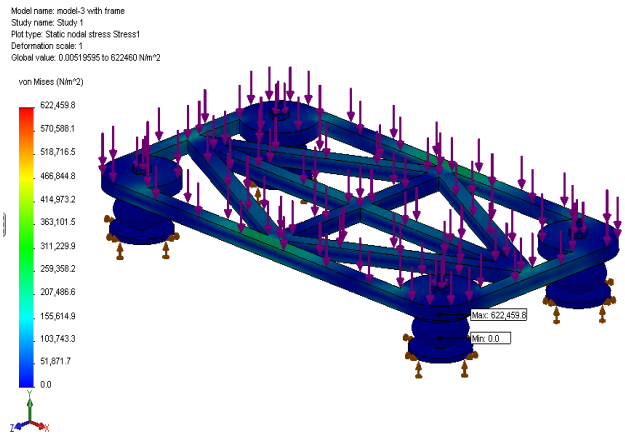

Figure-10. Stress analysis of redesign model in isolation pad with helical spring and hollow spherical ball.

VOL. 12, NO. 16, AUGUST 2017 ISSN 1819-6608
ARPN Journal of Engineering and Applied Sciences

www.arpnjournals.com

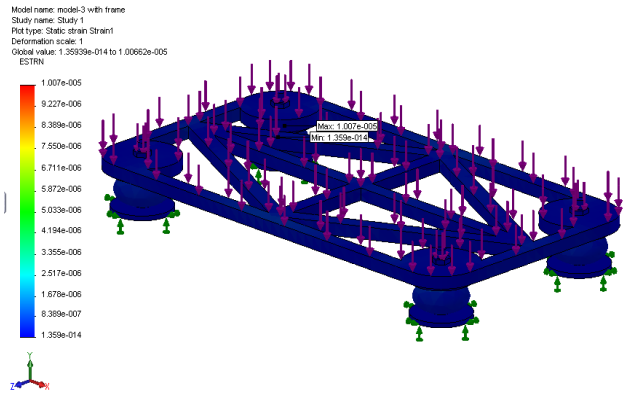

Figure-11. Strain analysis of redesign model in isolation pad with helical spring and hollow spherical ball.

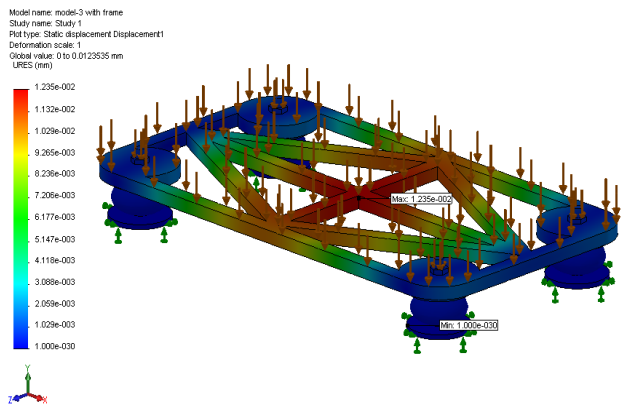

Figure-12. Displacement analysis of redesign model in isolation pad with helical spring and hollow spherical ball.

7. MODAL ANALYSIS

Modal analysis is used to determine the natural mode shapes and frequencies of object during the vibration. In most of the applications, the natural frequency of an isolation system is considered to be most important. Vibration is about frequencies. By its own nature, vibration involves repetitive motion. [12] Each occurrence of a complete motion sequence is called a cycle. Frequency is defined as number of cycles in a given period of time. One cycle per second is equivalent to one Hertz.

For the modal analysis of vibration isolation pad of three models, modal frequencies were calculated with boundary conditions applied at bottom of the isolators. Here no need of any external load for the modal frequency.

Table-2. Modal frequency values of three models.

Mode	Model -1	Model -2	Model-3
	Frequency [Hz]	Frequency [Hz]	Frequency [Hz]
1	23.556	104.84	4.4796
2	66.619	112.85	17.536
3	102.36	119.78	52.863
4	102.39	122.71	100.94
5	103.69	144.94	114.21
6	108.7	145	116.44

In Table-2 shows that the natural frequency vales of the vibration isolation pad of three models. Modal analysis is calculated from ANSYS workbench for the three models at 6 mode condition. Model 1 is existing one which natural frequency varies from 23.556Hz to 108.7. Model 2 is the bow shape design. In this model, the natural frequency varies from 104.84HZ to 145Hz. Model 3 is the hollow spherical ball with rubber plastic material, in which the natural frequency varies from 4.47Hz to 116.44HZ.

8. DYNAMIC ANALYSIS

DYNAMIC LOAD

Stroke Length of Press Machine (L) = 250mm
Maximum Upper Die Weight (m2) = 1500 Kg
Linear Speed of Die Travel= 20~50 spm

Assume, as the Press machine running at maximum stroke per minute.

The Dynamic Load of Press Machine F_D= m2.ω^2.r

Where ω= Angular Velocity = $\frac{2\pi N}{60}$ rad/sec

r =Crank Radius in meter

Crank Radius = $\frac{\text{Stroke Length of the Press Machine}}{2}$

= $\frac{0.25}{2}$ = 0.125m

F_D= 1500× $(\frac{2\times\pi\times200}{60})^2$ ×0.125

F_D= 82239.234N

Dynamic Force obtain by the Running Press Machine is give above. The Force Distribution along 4 damper present under the Press Machine.

The Force has to be Distributed, $\frac{F_D}{4}$=F_{D1}= F_{D2}=F_{D3}=F_{D4} = $\frac{82239.234N}{4}$= 20550.80N

Transient dynamic analysis is used to calculate dynamic response of vibration isolation pad, based on the time depends on the dynamic load condition [3, 9]. This type of analysis is also used to determine the time varying response results for the vibration isolation pad based on

acceleration, displacement, stress etc. For the analysis purpose of these three design models, dynamic load is considered based on a press machine load,in which ram moves up and down in machine. Using the values from machine dynamic load is calculated as above, using this dynamic load result for the design is calculated using ANSYS workbench. The Press Machine Fixed at Bottom of 4 Isolator and the Load were applied at the top surface of the frame. The Force Acting on Top Surface of the Frame. Load acting on isolation pad with initial and final load.

Initial Load =58860N
Final Load = 82239.234N

The Press Machine Ram Travel from Top Dead Centre to Bottom Dead Centre at 30 seconds.

A. Existing model

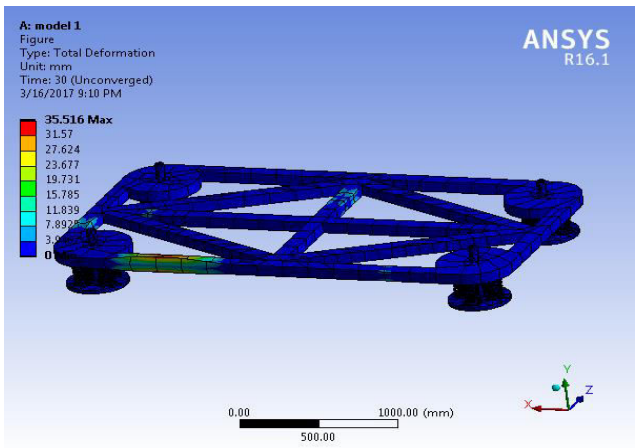

Figure-13. Deformation result for existing model.

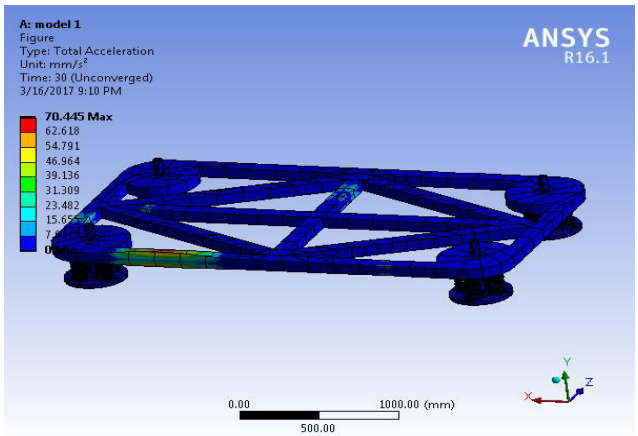

Figure-14. Acceleration result for existing model.

In the Figures 13-14 shows the maximum deformation value 35.516mm and maximum of acceleration value is 70.445mm/s2 for existing model isolation pad spring isolator.

B. Redesign model 1

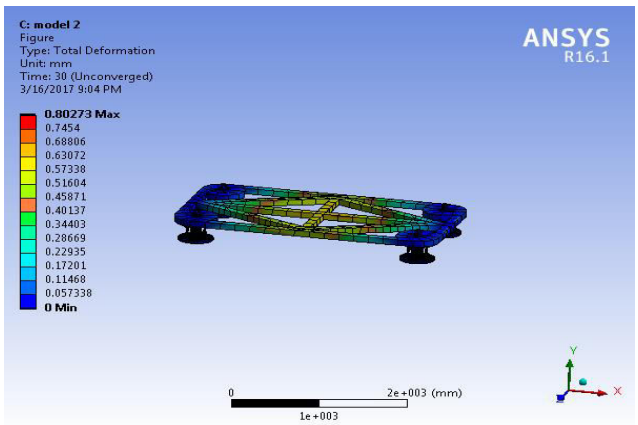

Figure-15. Deformation result for redesign model 1.

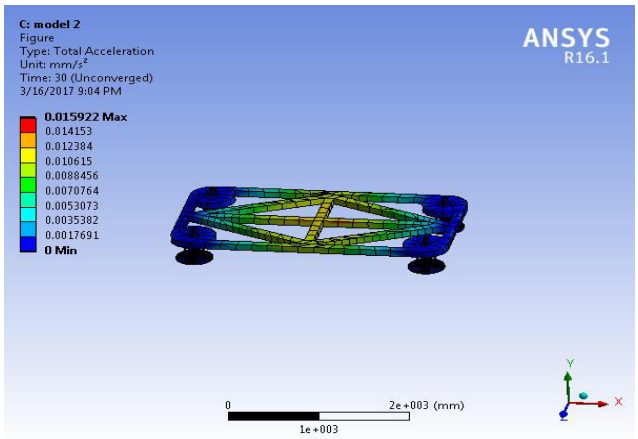

Figure-16. Acceleration result for redesign model 1.

In the Figures 15-16 shows the maximum deformation value 0.80273mm and maximum of acceleration value is 0.015922mm/s2 for redesign model of isolation pad with spring and bow shape design model.

C. Redesign model 2

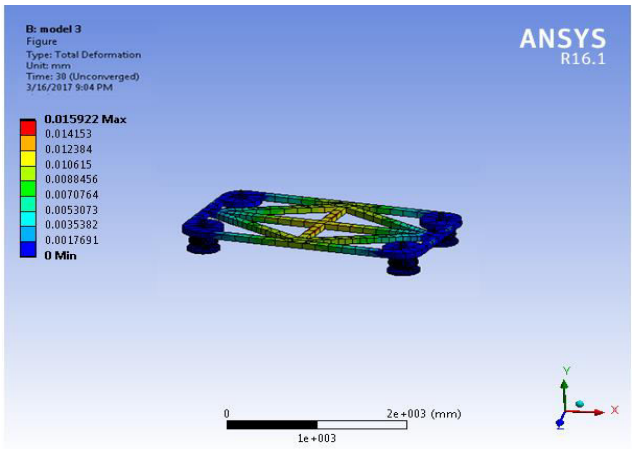

Figure-17. Deformation result for redesign model 2.

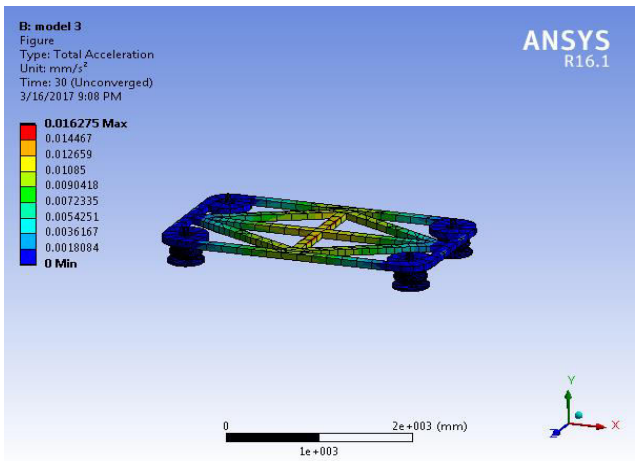

Figure-18. Acceleration result for redesign model 2.

In the Figures 17-18 shows the maximum deformation value 0.015922mm and maximum of acceleration value is 0.016275mm/s2 for redesign model of isolation pad with spring and hollow spherical design.

9. RESULTS AND DISCUSSIONS

The comparison of natural frequency values are shown in graph-1 for three different models at 6 different mode conditions.

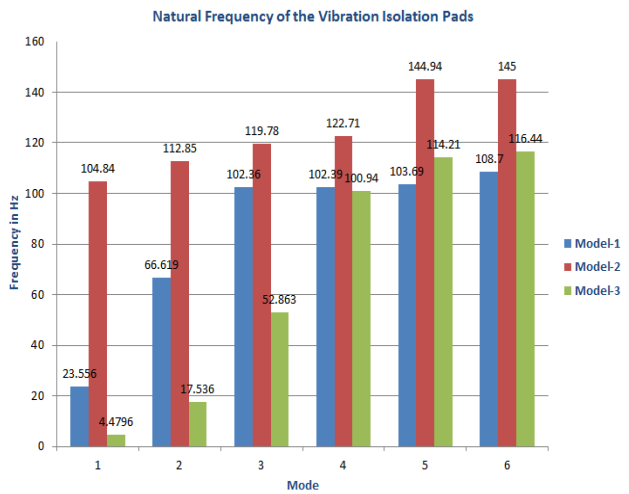

Graph-1. Comparison of the natural frequency for three model.

From the above graph as show the absorption of vibration is more in model-2 when compare to other model. Hence those models are efficient for vibration isolation pad of the selected press machine. The natural frequency is more (145 Hz). Hence it is safe for vibration isolation.

From the transient dynamic analysis results the maximum value of displacement and acceleration values are shown in Table-3.

Table-3. Dynamic result.

	Model 1	Model 2	Model 3
Displacement (mm)	35.516	0.80273	0.015922
Acceleration (mm/s2)	70.445	0.015922	0.016275

Using the displacement and acceleration we can find frequency values of vibration isolation pad for the three design models by using formula below mentioned.

The relation between frequency displacement, velocity and acceleration is,

$$f = \sqrt{\frac{G \times A}{2 \times \pi^2 \times D}}$$

Where
F = Frequency in Hertz
G = Gravity (9810mm/s2)
A = Acceleration (in mm/s2)
D = Displacement in (mm)

By using this formula, the frequency passed on to the floor is calculated and the graph is drawn based on the values of the three models.

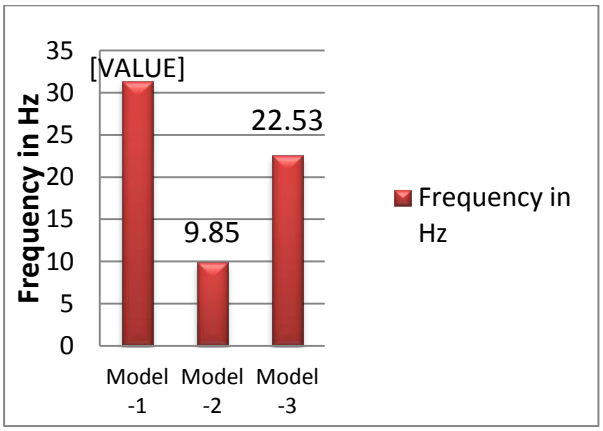

Graph-2. Comparison of dynamic frequency result.

With the inference from the graph, the frequency passed to the floor has been reduced drastically in the designed model, compared to the existing model.

10. CONCLUSIONS

In this project, static and dynamic analysis was done on an existing model and two newly designed models. In dynamic transient condition, the vibration was transferred through the three models with a static load and dynamic load condition. The frequency transferred to the ground is less in model-2 (9.8 Hz) and model-3 (22.53Hz) than the existing model. Hence those two models are good for isolation of vibration in machine.

REFERENCES

[1] A.R. Jadhav, Dr. Gawade S.S. 2012. Vibration Isolation of Diesel Electric Generator Used For Cell Tower, International Journal of Emerging Technology and Advanced Engineering, ISSN 2250-2459, 2(11).

[2] Robert Simmons. 2007. Vibration Isolation, American Society of Heating, Refrigerating and Air-Conditioning Engineers, Inc (ASHRAE).

[3] Shams her prakashvijay k. Puri. 2006. Foundations for vibrating machines. Journal of Structural Engineering, SERC, Madras. INDIA, Special Issue, April-May.

[4] A. T. Herfat. 2002. Purdue University Purdue e-Pubs Experimental Study Of Vibration Transmissibility Using Characterization Of Compressor Mounting Grommets, Dynamic Stiffness's Part-II, Experimental Analysis and Measurements, International Compressor Engineering Conference, Paper 1569.

[5] Battula Sudheer Kumar Lanka Ramesh. 2012. Preventing Shock and Vibrations Using Angular Mount with Polyurethane Elastomer. International Journal of Statistika and Mathematika, ISSN: 2277-2790 E-ISSN: 2249-8605, 3(2): 34-41.

[6] Vibro/dynamics. Elastomer or Spring Isolators: Which Type to Use and When, 2010.

[7] Dr. Ashesh Tiwari and Amit Chandsarkar. 2014. Analyze the Transmissibility of Various Materials Using Vibration Analysis. International journal of engineering sciences and research technology, ISSN: 2277-9655.

[8] P.Venkata Vara Prasad, V. Ranjith Kumar. 2015. Detection of bearing fault using vibration analysis and controlling the vibrations. International journal of engineering sciences & research Technology, ISSN: 2277-9655.

[9] T. Öztürk and Z. Öztürk. 2008. Vibration absorption and isolation in dynamically loaded foundations. World Conference on Earthquake Engineering, October 12-17, Beijing, China.

[10] Mazdoor Kisan Shakti Sangathan. 1992. Vibration isolation for machine foundations - Guidelines, Soil and Foundation Engineering, IS 13301.

[11] Greenheck building value in air. Mounting Bases and Vibration Isolation, September 2015.

[12] Machinery Vibration Analysis Fundamentals, the Lifetime Reliability Solutions Certificate Course in Maintenance and Reliability, all offices of G.P. Embelton and co.pvt.ltd.

[13] Takeyoshi Uematsu, Yuji Ishiyama. 2004. Development of compact vibration isolation equipment applicable to existing residences-restoring mechanism utilizing roller bearings, World Conference on Earthquake Engineering Vancouver, B.C., Canada, Paper No. 387.

[14] Patel Sanket Bharat, Shivprakash B Barve. 2014. Design and Analysis of Anti-vibration mount for G+3 Elevator, International Journal of Current Engineering and Technology, ISSN 2277 - 4106, Special Issue-3.

[15] Ms. Adarsha A. Miraje. Vibration level optimization of lathe machine by considering nonlinearities in vibration pad. International Journal of Innovation in Engineering, Research and Technology, ISSN No - 2394-3696.