VOL. 12, NO. 17, SEPTEMBER 2017 ISSN 1819-6608
ARPN Journal of Engineering and Applied Sciences

www.arpnjournals.com

A BLIND ZONE ALERT SYSTEM BASED ON INTRA-VEHICULAR WIRELESS SENSOR NETWORKS

Shubham Kumar Vashisth, Avneet Shrivastava, M. Shanmugasundaram and Sundar S.
School of Electronics Engineering, VIT University, Vellore, Tamil Nadu, India
E-Mail: vashishth.shubham8@gmail.com

ABSTRACT

The aim of this project is to reduce number of wires in vehicle and alert the driver of blind zone collision. Because of the expanding number of sensors sent in current vehicles, intra-vehicular remote sensor systems (IVWSNs) have as of late gotten a great deal of consideration in the car industry, as they can diminish the measure of wiring tackle inside a vehicle. By evacuating the wires, auto producers can diminish the heaviness of a vehicle and enhance motor execution, mileage, and dependability. Notwithstanding these immediate advantages, an IVWSN is an adaptable stage that can bolster other vehicular applications too. An illustration application, known as a side visually impaired zone caution (SBZA) framework, which screens the visually impaired zone of the vehicle and cautions the driver in a convenient way to avoid impacts, is talked about in this paper. The execution of the IVWSN-based SBZA framework is assessed through genuine investigations led on two test vehicles. Our outcomes demonstrate that the proposed framework can accomplish roughly 95%-99% location rate with under 15% false alert rate. Contrasted and business frameworks utilizing radars or cameras, the primary advantage of the IVWSN-based SBZA is significantly lower cost.

Keywords: blind zone detection, automotive sensors, IVWSN, SBZA.

1. INTRODUCTION

Most of the vehicles are controlled by electrical control units (ECUs) which are placed inside them. These ECUs need sensors to collect real-time information and perform the particular operations. Currently most of these sensors are connected using wires .Significant issues are caused by the use of large number of physical wires:

- Additional weight to the vehicle
- Also effects the location of sensor in the vehicle because of its length factor
- The cost of these wires is also an additional drawback as well as their duration period also adds up to the cost of maintenance.

To solve these issues, wireless technology is implemented now, for the communication of ECUs and sensors. Thus this paper is based on the concept of intra vehicular wireless sensor networks. The wireless technology has proven to be major benefit over complex and costly wired system.

This paper is about Blind Zone Alert System using Intra-vehicular wireless sensor networks. The main objective is to prevent collision of vehicle with the obstacle at sharp turns which are the blind zones for the vehicle. In addition to this, there is an aspect of informing the car owner, in case any accident happens, along with the current location of the vehicle.

This system monitors the blind zone of the vehicle and alerts the driver in much less time about the obstacles in order to prevent any accident. Also it helps to inform the concerned person about the accidents that happen so that appropriate actions can be taken at earliest.

M. Ahmed *et al*. [1] proposed a checking show framework which is put on the vehicle's dashboard to screen the impediment's nearness on the blind side while meandering and stopping. Impediment evasion sensors set on the blind sides of the vehicles and its simple yields are nourished to the Arduinouno microcontroller board. After prepared that the snag location is seen by one LCD by sign.

J. Yick *et al.* [2] explained the developing interest of utilization of remote sensors applications in various angles makes the nature of-administration (QoS) to be one of foremost issues in remote sensors applications. Nature of administration certification in remote sensor systems (WSNs) is troublesome and all the more difficult because of the way that the assets accessible of sensors and the different applications running over these systems have distinctive limitations in their inclination and prerequisite.

F. Kong *et al*. [3] proposed a venture to identify and screen questions inside a foreordained separation from the vehicle that might be moving toward its blind side. In addition, the development is especially intended to be utilized for a vehicle that does not have a factory equipped blind side recognition framework. This strategy and framework uses two ultrasonic sensors for the vehicle to distinguish moving toward items, including different vehicles, people on foot and other conceivable deterrents, in the blind side region.

I. Demirkol *et al*. [4] plotted the sensor arrange properties that are significant for the plan of Macintosh layer conventions. At that point, we portray a few MAC conventions proposed for sensor systems underlining their qualities and shortcomings. At long last, we call attention to open research issues on MAC layer plan.

S. C. Ergen *et al*. [5] developed a novel protocol to achieve energy efficient and reliable multihop data transfer in WSNs satisfying given latency requirements. Energy efficiency is achieved by optimizing the scheduling of the underlying Time Division Multiple Access (TDMA) system by minimizing the wake-up number of the nodes.

K. Akkaya *et al.* [6] proposedlate steering conventions for sensor systems and presents an arrangement for the different methodologies sought after. The three primary classes investigated in this paper are information driven, various leveled and area based. Each steering convention is depicted what's more, talked about under the suitable class.

P. Varaiya *et al*. [7] developed a directing calculation that boosts the lifetime of a sensor organize in which all information parcels are bound for a solitary accumulation hub. Lifetime is amplified by altering the quantity of bundles crossing every hub. The modification is done by transmitting over option courses. The initial segment of the paper expect that the most pessimistic scenario delay coming about because of vitality proficient directing is not as much as the greatest fair esteem. Overlooking the defer limitation of the system, the courses are chosen as the answer for a direct programming (LP) issue in which the goal is to boost the base lifetime of every hub. The arrangement is actualized in an incorporated calculation, and after that approximated by an iterative calculation in light of minimum cost way directing, in which each progression is executed productively in a disseminated way. The second some portion of the paper fuses defer ensure into vitality proficient directing by obliging the length of the steering ways from every sensor hub to the gathering hub.

Table-1. Comparison of existing and proposed system.

Existing system	**Proposed system**
Here human concentrate is needed to drive and safety.	In proposed system, we can design a new system to monitoring the blind zone vehicle and intimation
Its fully depends on man power source	
Drawbacks of existing system	**Advantage of proposed system**
There is no intimation	Human intervention is less
Human intervention is needed to monitor and drive	Fast response
	Buzzer will alert the driver

2. METHODOLOGY

In this blind zone alert system, ultrasonic sensor is used which detects if any obstacle is in close range at the sharp turns and alert the driver. The information about the obstacle is displayed on the LCD. In addition to this the vehicles stop when the distance between the vehicle and the obstacle is less than the threshold value. The vehicle automatically stops to prevent the collision with the obstacle.

Another aspect of this system is vibration sensor which is used to alert the owner of the driver in case any accident happens through SMS using GSM module. Ifthe sensor detects vibration of the vehicle more than the threshold (normal) value, then an alert message is sent to the owner about the accident. Also, using the GPS technology, the current location of the vehicle is also sent in that SMS to the owner.

3. PROPOSED SYSTEM

A. Vehicle detection

Ultrasonic sensors (otherwise called handsets when they both send and get) deal with a rule like radar or sonar which assess properties of an objective by translating the echoes from radio or sound waves individually. Ultrasonic sensors create high recurrence sound waves and assess the resound which is gotten back by the sensor. Sensors compute the time interim between sending the flag and accepting the resound to decide the separation to a protest.

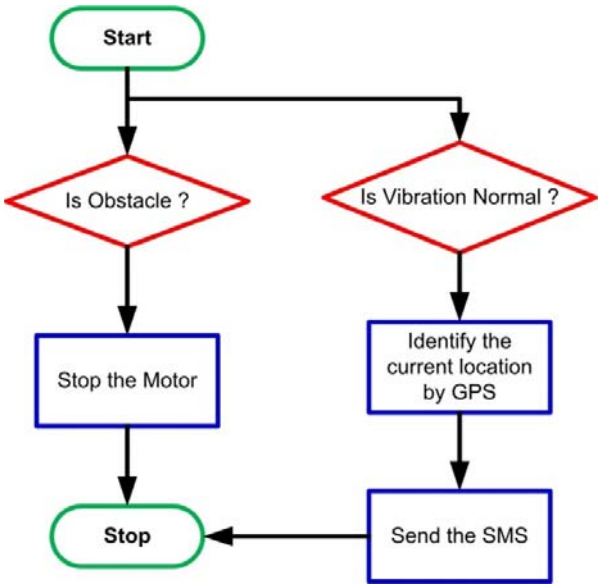

Figure-1. Flow chart for vehicle detection.

Case 1: When no obstacle detected by ultrasonic Sensors as shown in Figure-2.

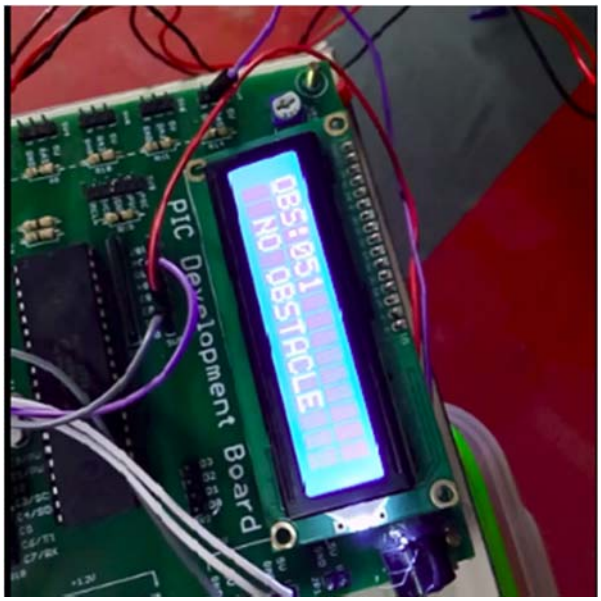

Figure-2. No obstacle.

Case 2: Ultrasonic Sensors detects Obstacle as shown in Figure-3. When Obstacle is detected by ultrasonic sensors as a result motor stops to prevent collision with other vehicle.

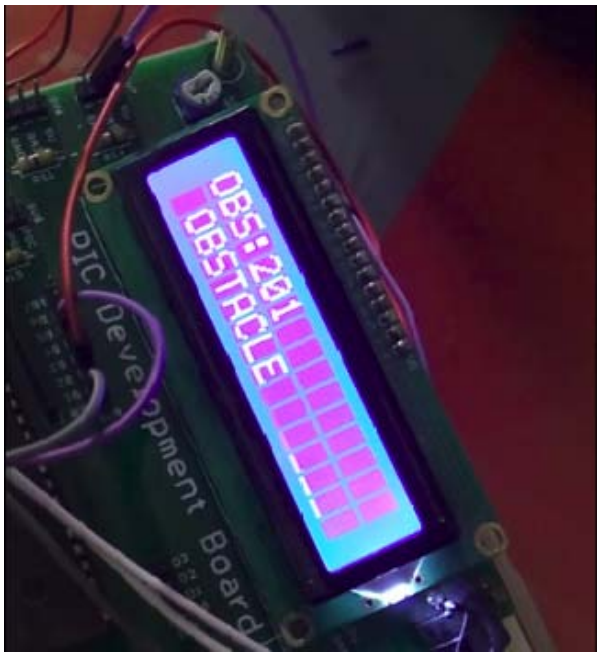

Figure-3. Obstacle is detected.

A. Further enhancement and precaution using Vibration sensors

Vibration sensor is mounted at the base of the unit. The unit ought to be settled with the vibrating body immovably the affectability is balanced for the required vibration/stun is identified the yield goes low and the deferral is accommodated appropriate operation vibrating recurrence and plentifulness can be recognized.

Case 1: As the accident doesn't happen, the LCD shows vibration normal or vehicle in normal condition as shown in Figure-4.

Figure-4. Vibration normal.

Case 2: As shown in Figure-5(a, b, c) when the collision happens LCD shows vibration abnormal and a text message will be sent to owner with GPS location.

ARPN Journal of Engineering and Applied Sciences

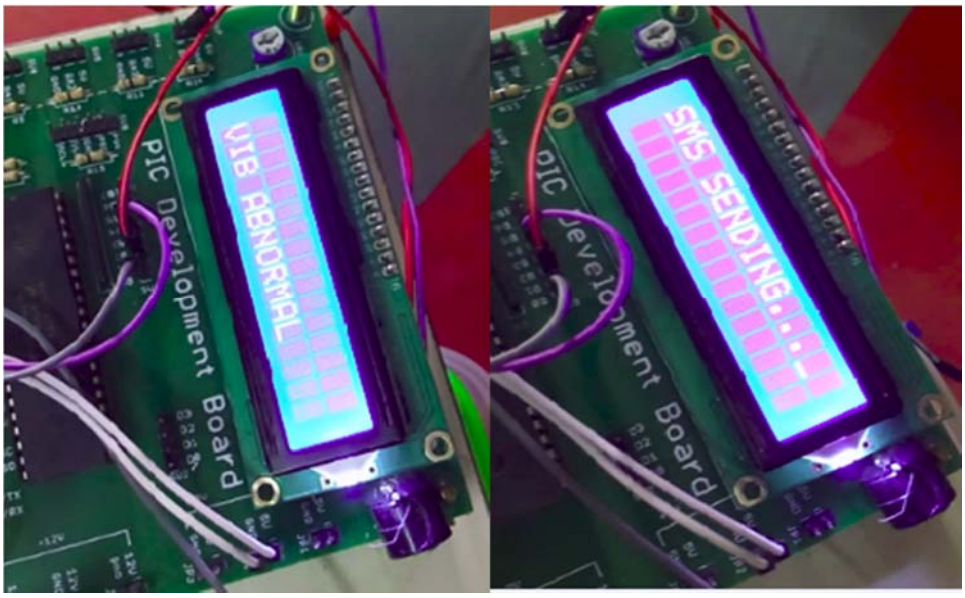

Figure-5(a, b). Vibration abnormal.

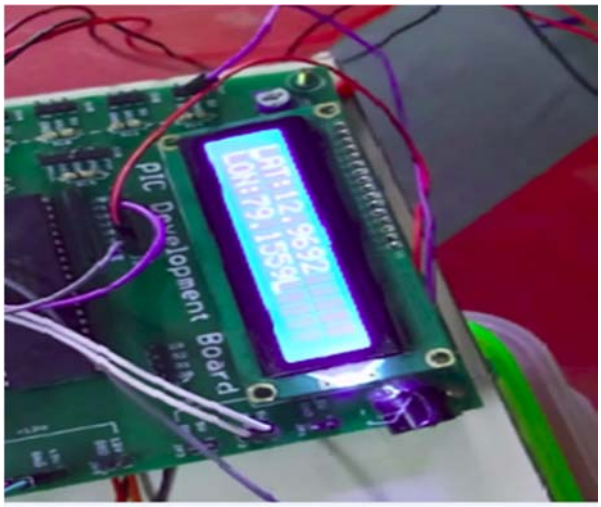

Figure-5c. GPS location.

4. BLOCK DIAGRAM

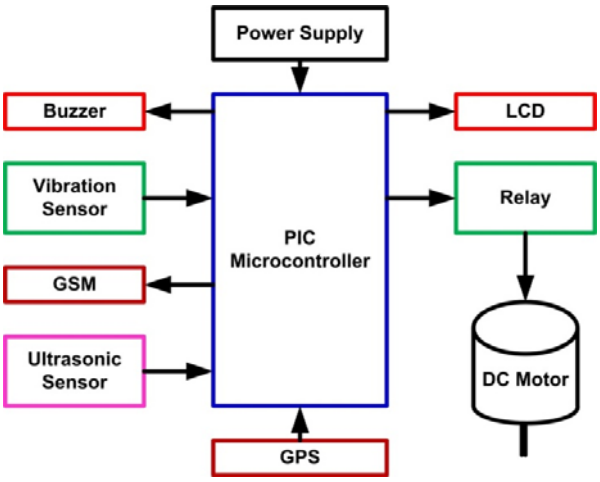

Figure-6. Block diagram of system.

CONCLUSIONS

It will be really beneficial to produce vehicles with intra vehicular wireless sensor network system to enhance the safety aspects of the vehicles in the near future. As a conclusion of this paper, it is observed that using this blind zone alert system, not only significant number of collisions can be avoided but also the cases in which the accidents happen, there is an additional and really helpful feature of alerting the concerned person is successfully implemented. The use of more sensitive ultrasonic and vibration sensor while implementing this on a large scale can help increase the efficiency of this system. Since the used technology is wireless, the complexity of wired system is also avoided as well as the reliability and duration factor is also better in this system? With the minimal use of physical wires, the extra weight added to the vehicle is also avoided.

REFERENCES

[1] M. Ahmed, C. Saraydar, T. ElBatt, J. Yin, T. Talty, and M. Ames. 2007. Intravehicularwireless networks. in Proc. IEEE Globecom Workshop. pp. 1-9.

[2] J. Yick, B. Mukherjee, and D. Ghosal. 2008. Wireless sensor network survey. Comput. Netw. 52(12): 2292-2330.

[3] F. Kong and J. Tan. 2008. A collaboration based hybrid vehicular sensor network architecture. in Proc. IEEE Int. Conf. Inf. Autom. (ICIA). pp. 584-589.

[4] I. Demirkol, C. Ersoy, and F. Alagoz. 2006. Mac protocols for wireless sensor networks: A survey. IEEE Commun. Mag. 44(4): 115-121.

[5] S. C. Ergen and P. Varaiya. 2010. Tdma scheduling algorithms for wireless sensor networks. Wireless Netw. 16(4): 985-997.

[6] K. Akkaya and M. Younis. 2005. A survey on routing protocols for wirelesssensor networks. Ad hoc Netw. 3(3): 325-349.

[7] S. C. Ergen and P. Varaiya. 2007. Energy efficient routing with delay guarantee for sensor networks. Wireless Netw. 13(5): 679-690.