VOL. 12, NO. 19, OCTOBER 2017 ISSN 1819-6608
ARPN Journal of Engineering and Applied Sciences

www.arpnjournals.com

AUTOMATED COLOR SENSOR SYSTEM USING LDR AND RGB LEDS CONTROLLED BY ARDUINO

Ahmad Amhani and Zaki Iqbal
Department of Engineering, RAK Research and Innovation CenterAmerican University of Ras Al Khaimah, Ras Al Kamiah, United Arab Emirates
E-Mail: ahmad.amhani@aurak.ac.ae

ABSTRACT

Color sensor systems evolved and reached a high level of technologies in detecting several colors, mostly in robotics. Many factors can affect the success of this device like efficiency. It is so important when you are looking for accurate results but it could fail if the cost is high. The purpose of this project is to create a color sensor system that has the good efficiency and low cost. The system is made to detect ten different colors and differentiate between them. It has been implemented as a breadboard using LEDs, an LDR, Op Amps and an Arduino UNO. This paper will be explaining the components, working principle, connections, calculations, results and the errors. The motivation of this project is the ongoing research in many parts of the world to alleviate color blindness [1, 3, 7, and 8]. Although this project might not be directly applicable to human retina but it can be integrated with robots and automotive industries.

Keywords: color sensing, LDR, RGB LED, arduino.

INTRODUCTION

Color is the perceptual property of an object that appears to the observer when an incident ray of light hits the surface of the object. Recognizing different colors of objects is important in our day to day life in order to enhance understanding of our environment and interact with it. To detect and identify colors, humans and some animals use information from special cells situated in the retina. This project focuses on achieving artificial color vision using simple electronic components within the given time [11].

This project is significant for applications that require simple color detection ability for not more than ten different colors. The color sensor developed in this project is a low-cost sensor made from simple electronic components that can be readily found; hence it can be developed and applied easily. Because it can be an ideal option for a simple industry application and it can be integrated with robotics vision. Moreover, this project is highly significant for the students to enhance knowledge on the area of color theory and sensor development. While carrying out the project, the usage of an Arduino UNO and programming skills were strengthened.

A. Background of Study

Color is derived from the wavelength and intensity of light in the visible spectrum. Human beings can see in the visible spectrum at a wavelength ranging approximately from 380 nm to 740 nm. The retina has a special type of cells which are sensitive to light namely rods and cones. Rods are retina cells responsible for vision during dark or minimum light. Whereas cones activate when there is optimum light and based on the range of wavelength they are more sensitive to, cones are ordered into red cones, green cones, and blue cones. The light range that will be seen and the number of cone types vary between all the species [11].

Color detection has a variety of application in an industry to facilitate production and packaging process. In food industries, for example, a color of products can be used as a quality control measure. In others such as automobile, textile and paint industries, products or input materials can be sorted according to their colors with the help of color detecting sensors. In addition, during bottling of products, color detection is used to inspect the ones that have a bottle cap from those that doesn't have [12].

In this research, color detection is carried out using LDRs and LEDs. The LEDs (light emitting diodes) are used to emit red, blue and green colored light whereas the LDRs (light dependent resistors) are used to sense the intensity of the reflected light from the object. The output of the sensor is analyzed and interpreted by an Arduino UNO and the result is displayed using an LCD.

B. Problem statement

Color sensors have a variety of useful application in many industries. They are also used in robotics for navigation or any other desired activity. Although highly selective sensors are available in the market, cost wise they might not be an ideal choice for many applications.

LITERATURE REVIEW

The color of an object is due to the interaction of the surface of a body with a ray of light and an observer. Color categories are related to objects, materials, light sources, etc., based on their physical properties such as light absorption, reflection, or emission spectra. There are different color spaces that help in quantifying color attributes numerically, for example, RGB color space. In this project the color space being used is RGB color space. The color values are measured using a combination of an LDR and a LED network. In this chapter the theory of color sensing, the differentiation and the different components that are used are discussed and finally, few other projects that are of relevance to this project are summarized and presented.

VOL. 12, NO. 19, OCTOBER 2017 ISSN 1819-6608
ARPN Journal of Engineering and Applied Sciences

C. Components

There are different types of electronic equipment that can be used as color sensors. Electronic components like LDRs and phototransistors detect light by changing their behavior based on the intensity reflected on them. In this project LEDs and LDRs are being used as the main components of the color sensor. The central processing unit is Arduino Uno displaying the results on a LCD.

PROCEDURE IDENTIFICATION

Sensor working principle

The LDR exhibits photoconductivity and changes its resistance depending on the light intensity falling on it. The resistance of the LDR increases when the intensity of the light decreases. For each object whose color is to be detected, the three colored LEDs (red, green and blue lights) are turned on sequentially and data is recorded by the LDR simultaneously. For example, during a scan of a red object, each LED is shining on the object which causes the reflected light from the object to fall on the LDR, and it is known that a red object will tend to reflect all the red light falling upon it while it absorbs the green and blue lights as shown in Figure-1. In such situation, minimal light intensity from the green and blue LEDs is reflected to the LDR, while a maximum light intensity is reflected from the red LED. Hence the LDR will have a larger resistance for the green and blue light scanning, while it has a minimum resistance for red light scanning.

Figure-1. Reflection of white light on different colored objects.

Setup up and testing

The Arduino is controlling the LEDs. Each group of the LEDs has to have a variable resistor; to control the 5 volts that the Arduino feeds and make sure all the LEDs has exactly the same brightness to avoid having major errors in the intensity which the LDR detects.

A resistor should be used with the LDR to take the voltage difference in between. As the light intensity increases, the LDR'resistance will keep decreasing so that the voltage, this relation is shown in Figure-2[6, 9].

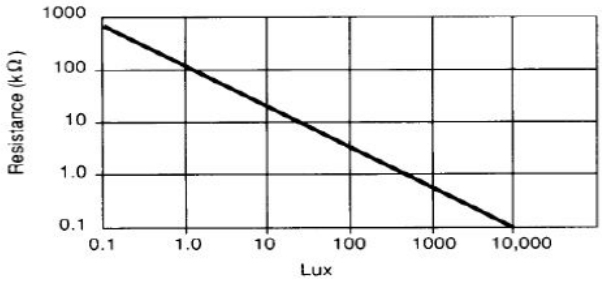

Figure-2. The relation between intensity and resistance in LDR.

The Light from the LED is reflected by an object to the LDR. The black rectangle in Figure-3 represents a barrier to insure the light is the reflected one, not from the LED directly.

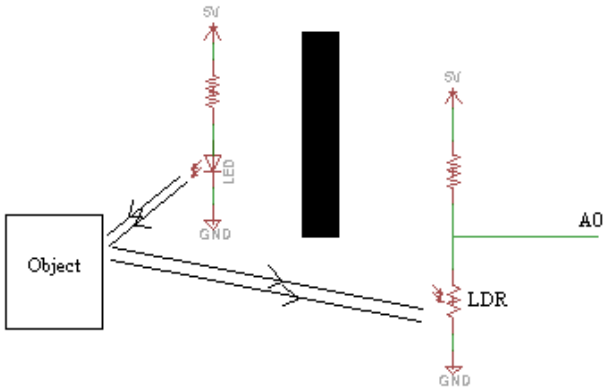

Figure-3. The principle of reflection.

Figure-4 is showing a cylindrical cover between the LDR and the LEDs to avoid interference between the reflected light and the light from the LEDs directly.

Figure-4. The LEDs system.

The LEDs system

The voltage dropson the LDR when each of Red, Green and Blue LEDs are on separately is measured. Each group color of LEDs will turn on for 0.5 second and then turn off. When the LED color matches the color of the

surface then it will have less voltage on that LED timing. For example, if the object is red, the red LED will have less voltage than the blue and green when it is on.

If the object color is orange, the voltage will decrease in the same rate but slightly different from the Red surface as in the Table-1 below.

Table-1. RGB values for red, Green and Blue surfaces in volts.

RGB values for Red surface		Hexa Code
R	4.79	0
G	4.88	
B	4.90	
RGB values for Green surface		
R	4.93	1
G	4.71	
B	4.89	
RGB values for Blue surface		
R	4.94	2
G	4.79	
B	4.70	

The results shows that the difference in voltage is too small for all the 10 colors shown in Table-2 below, and so an increase in the difference between the voltage's values should be done, this amplification is done using OP AMPs.

Table-2. RGB values for the rest of the colors in volts.

Color	RGB	Hexa Code
Orange	R 4.76 G 4.80 B 4.90	3
Yellow	R 4.79 G 4.62 B 4.88	4
Light Blue	R 4.84 G 4.71 B 4.88	5
Purple	R 4.89 G 4.86 B 4.83	6
Grey	R 4.88 G 4.84 B 4.84	7
Black	R 4.95 G 4.93 B 4.94	8
White	R 4.55 G 4.53 B 4.58	9

a) Amplify the voltage's differences

The issue of having very small difference had to be solved because of the high error probability that can occur. Having some readings too close to each other would surely end up with the wrong result and having a DC circuit changes the variation due to the slight changes that can occur.

Starting with the range that is already available, measuring the values to find out the highest and the smallest value would help know the exact amount for the range increase. Subtracting the LDR values from the range, which is from 4.65 – 4.95, we end up with a range in between 0 and 0.3

4.65 - 4.65 = 0

4.95 – 4.65 = 0.3

Having a range from 0 - 0.3, is really small for a variety of 10 colors, an amplifier was used to increase this range and make the maximum reach up to 4.8 V. The maximum was chosen to prevent any error that can happen in the circuit, such error can amplify the voltage over 5 V which can cause the Arduino to malfunction. Using an amplifier with gain = 16 was the solution to increase the range from 0 - 0.3 to 0 - 4.8 and therefore help reduce the probability of error that can happen.

When designing the circuit with the subtractor and the amplifier, the drop voltage should be exactly equal to 4.65 V, therefore, a voltage follower with a variable resistor was used to be able to get the most accurate drop voltage needed. An amplifier was used to amplify the current as the source used is 12 V, and because all the amplifiers had to get that 12 V, another amplifier at the end needed to be added to get the current needed.

b) Designing circuit segments

$$V_{out} = -V_1\left(\frac{R_3}{R_1}\right) + V_2\left(\frac{R_4}{R_2+R_4}\right)\left(\frac{R_1+R_3}{R_1}\right) \quad (1)$$

When designing the differential amplifier, the final equation should be V2 – V1, and so, all the resistors had to have the same resistance so that the equation will beV2 – V1 = Vout [5].

$$A_{CL} = \frac{V_{out}}{V_{in}} = 1 + \frac{R_f}{R_g} \quad (2)$$

Now, the output voltage's maximum equals to 0.3v, and the maximum wanted amplification should be 4.8 for safety, this means that 4.8/0.3 equals to 16. Assuming Rg to be 10 KW,$(A-1)*10K = 150$ K, therefore, the amplifier nowwould work with a gain of 16 which would amplify the 0.3 to 4.8[2].

However, the system is powered by 12V. All thedivisions that the source will feed, makes the voltage follower is needed to increase the current. Then, connect all the ampifier circuits along with the LDR[2]. However, Figure-5 is showing the range circuit.

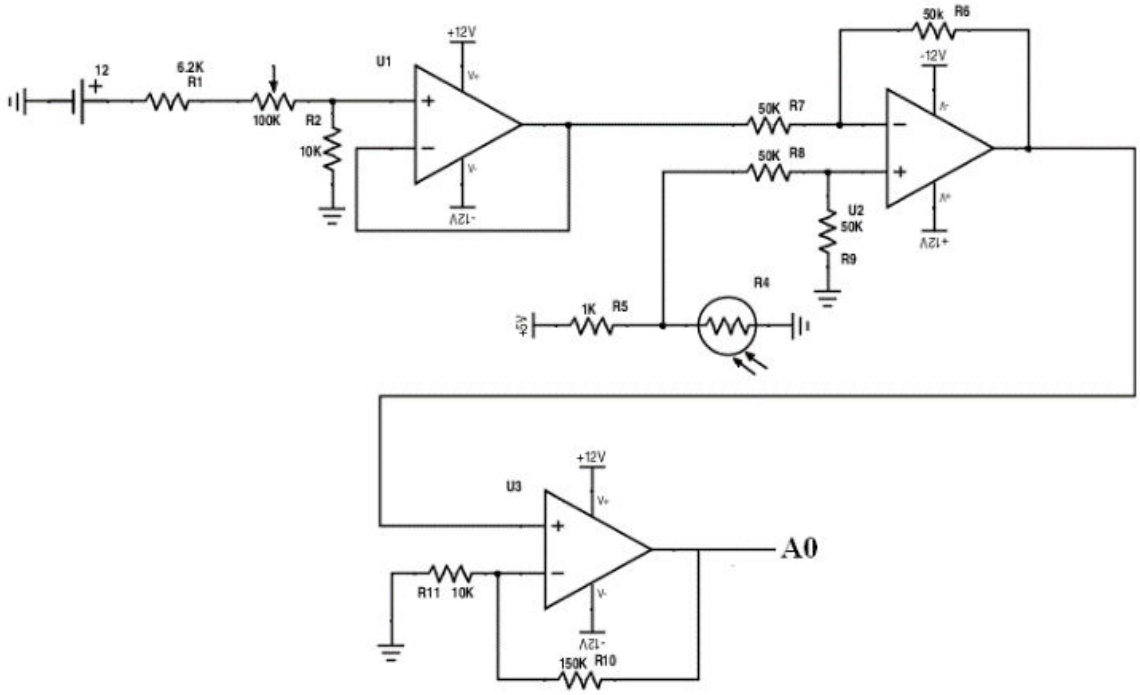

Figure-5. The range circuit.

The LCD is connected to show the results as color's names.In case of no LCD, a connected computer to Arduino will be needed. With the LCD, the system is independent[10].

The full circuit of the system must be finished as shown in Figure-6. The Amplification circuit is connected to A0 pin in Arduino Uno. The LEDs system is connected to Pin 11,12 and 13. Finally, the LCD is connected to Pin 2 to 7 in the Arduino.

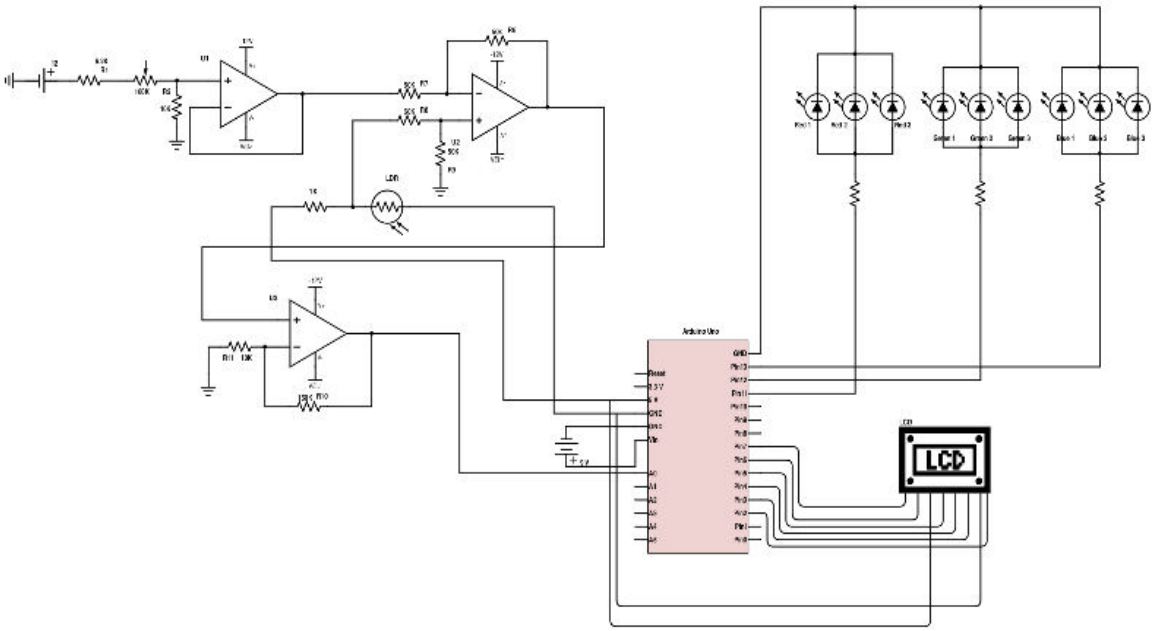

Figure-6. Full circuit.

RESULTS AND DISCUSSIONS

The values of each color is stored in the Arduino. These data are the references to take the decision shown in Table-3 below.

Table-3. RGB values for the ten colors in volts.

Color	RGB	Hexa Code
Red	R 2.012 G 4.317 B 4.268	0
Green	R 4.695 G 2.475 B 4.329	1
Blue	R 4.85 G 4.512 B 2.56	2
Orange	R 0.795 G 3.597 B 4.06	3
Yellow	R 1 G 1.682 B 4.024	4
Light Blue	R 2.32 G 2.37 B 0.98	5
Purple	R 4.317 G 4.584 B 3.841	6
Grey	R 4.256 G 4.085 B 3.841	7
Black	R 5.365 G 4.975 B 4.926	8
White	R 0.451 G 0.519 B 0.39	9

Figure-7 below is showing how the system is printing the number of the color on 7 segment display since LCD was not available. The system was able to detect the color and could display the corresponding hex code.The total cost to design this project was around 15 USD This could be developed as the low cost sensing system.

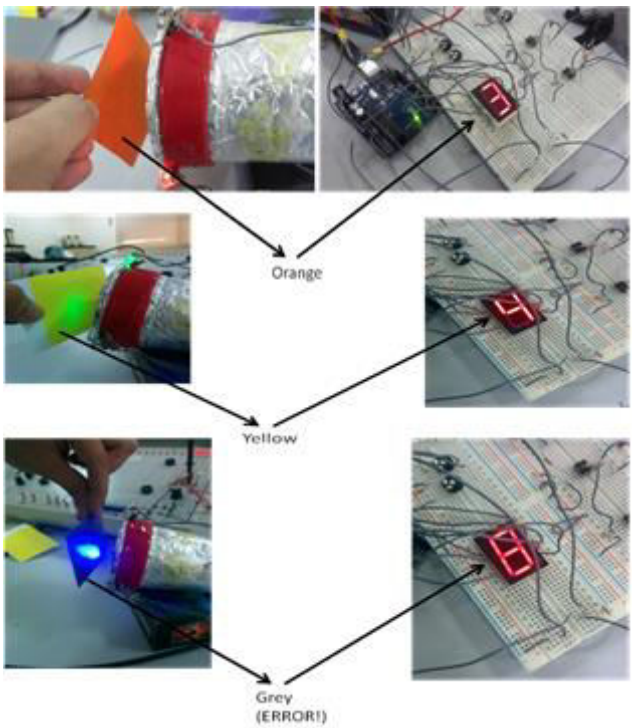

Figure-7. The results of the working system with an error.

CONCLUSIONS

The idea of the research is to create a color sensor with the lowest cost. Rigrious randon test were carried out and the system produced a very high success rate with a small percentage of error. As shown in Figure [13] above, there are errors equal to 10%. This error can be reduced in two ways, by improving the physical design of the system, and brighter LEDs. Certainly, this improvement will be if implemented will make the system much precise. The amplification circuit may not be needed if the LDR was getting better intensity. This idea can be incorporated in home robots like the self cleaning vaccum machine, in factories to sort color merchandise (cloth, toys, electronic prodcuts) depending on the colors and the application to these could be many.

REFERENCES

[1] Y. Bayou. 2010. Colour Detection Using Artificial Retina .University Teknologi Petronas [Online]. Available:http://utpedia.utp.edu.my/238/.

[2] C. R. Nave. 2001. Op-amp varieties [Online]. Available:http://hyperphysics.phy-astr.gsu.edu/hbase/electronic/opampvar2.html.

[3] O. G. Saracoglu and H. Altural. 2010, Aug. 10. Colour Regeneration from Reflective Colour Sensor Using an Artificial.Erciyes. UniversityErciyes [Online]. 10, 8363-8374. Available: www.mdpi.com/1424-8220/10/9/8363/pdf.

[4] RGB Colour Codes Chart (n.d.) [Online].Available: http://www.rapidtables.com/web/colour/RGB_Colour.htm.

[5] Defferential Apmlifier (n.d.) [Online].Available: https://en.wikipedia.org/wiki/Differential_amplifier.

[6] Photoresistor(n.d.)[Online].Available:https://en.wikipedia.org/wiki/Photoresistor.

[7] S. R. Kewate, S.V. Karmare, N. Sayankar, and S. Gavhale. 2014. Automatic Speed Control System by the Colour Sensor for Automobiles -An Innovative Model Based Approach. Intelligent Technique. International Journal of Advanced Mechanical Engineering [Online]. 4(2): 223-230. Available: http://www.ripublication.com/ijame-spl/ijamev4n2spl_12.pdf.

[8] M. Assaad, I. Yohannes, A. Bermak, D. Ginhac, and F. Meriaudeau. 2014, Feb. 17. Design and Characterization of Automated Colour Sensor System.University of Bourgogne [Online]. 7(1): 1-12. Available:https://hal-univ-bourgogne.archives-ouvertes.fr/hal-00947786/document.

[9] D. Raja. 2016. Light Intensity Measurement Using LDR and AVR Microcontroller [Online].Available: http://circuitdigest.com/microcontroller-projects/light-intensity-measurement-using-ldr-and-atmega8.

[10] Martes. 2014, Feb 4. Tutorial-LCD+temperature Sensor [Online].Available:http://elcajondeardu.blogspot.ae/2014/02/tutorial-lcd-sensor-de-temperatura.html.

[11] Colour(n.d.) [Online].Available:https://en.wikipedia.org/wiki/Colour.

[12] N.B.Daud. 2007, May. Application of Colours Sensor in an Automated System.Technical University Malaysia [Online]. Available:http://library.utem.edu.my/index2.php?option=com_docman&task=doc_view&gid=3314&Itemid=113.