VOL. 12, NO. 20, OCTOBER 2017 ISSN 1819-6608
ARPN Journal of Engineering and Applied Sciences

www.arpnjournals.com

ANALYSIS OF THE RESULTS OF FIELD STUDIES OF GEOMECHANICAL PROCESSES IN CONSTRUCTION OF LARGE TRANSPORT TUNNELS WITH THE USE OF A MECHANIZED TUNNEL-BORING COMPLEX WITH WORK FACE EARTH PRESSURE BALANCE IN THE SPECIAL CONDITIONS OF VOIDS COMPENSATION IN THE ROCK MASSIF

Evgeny Mikhailovich Volokhov and Veronika Igorevna Kireeva
Saint-Petersburg Mining University, Russian Federation, Saint-Petersburg, 21-st Line V.O
E-Mail: evgeny.m.volokhov@mail.ru

ABSTRACT

This paper is focused on studying the processes of rock massif and the Earth's surface deformation during construction of tunnels by mechanized complexes with balancing the load on the face with excessive pumping into the space behind the lining. Peculiarities of the construction technology have been considered. The results of automated monitoring of the enclosing array and the Earth's surface displacements during construction of a double-track tunnel in the Frunzensky radius of the St. Petersburg subway have been analyzed. The long-term surface monitoring data have been presented. The unconventional nature of the geomechanical processes has been revealed, in particular, stable uplift of the massif and the discrete nature of deformations. For the joint consideration of technological modes of construction and monitoring data, power dependence between the amount of the excess grouting in the space behind the lining and the value of the vertical displacement of the surface was obtained. To process and analyze the data of field observations of the surface and the massif displacement and deformation, the methods of mathematical statistics and the theory of errors were used.

Keywords: tunnel building, earth's surface shifting, monitoring, surface uplift, voids compensation.

1. INTRODUCTION

Development of large cities is impossible without expanding and improving their transport infrastructure. The most important element of this development is building new subway stations and lines.

Due to the necessity of reducing construction costs, the tendency to reducing the depth of the designed workings has become more and more clearly expressed in the recent years. With that, underground structures are often built in complex geological conditions. For example, in St. Petersburg, Russia, reduction of depth implies organization of underground construction in the unstable layer of quaternary deposits, which is characterized by the presence of several aquifers, substantial heterogeneity in depth and along the structures, low values of adhesion and modulus of rock deformation.

In these circumstances, construction of underground workings, such as main line tunnels, is impossible without the use of special technology of excavation. For these cases, Tunnel Boring Mechanized Complexes (TBMC) with active work face earth pressure balance is increasingly used.

At the same time, tunnel construction, even with a "low-aqueous" technology violates the natural balance in rock massif, the displacements arising close to the tunnel develop up to the surface, where the displacement pothole is formed and develops. Talking about excavation with the use of large diameter TBMCs at small depths, it is here that the impact on the rock mass can almost immediately be manifested on the Earth's surface and in the near-surface zone, where urban infrastructure facilities are mainly localized. Even moving the shield with the use of traveling jacks may have effect on the surface.

The practice of using such technology of tunnel excavation in Moscow and St. Petersburg showed that, despite the impressive range of the above-described technical tools could not completely eliminate manifestation of displacements on the Earth's surface [1, 2]. So, in the construction of the double-track main line tunnel of the Frunzensky radius of the St. Petersburg subway, massif rising was detected along with settlement, which reached 50 mm in some areas.

Undermining in such modes of excavation of the underground utilities of the water utility (at the "Yuzhnaya" - "Dunaisky Prospect" running line) was the reason of integrity violation in the main pipeline. During the construction of the Lefortovo and the Serebryanoborsk transport tunnels in Moscow with the use of TBMCs of similar class with the diameter of 14.6 m, deformations on the surface could not be completely eliminated either [4]. Settlement above the axis of the tunnel here reached 20 to 25 mm.

In such conditions, protection of the existing above-ground infrastructure and development of reliable methods of predicting displacement requires studying the processes of surface and massif deformation in case of using the technology with active influence on the massif. The latter has become the aim of this work.

In studying the processes of surface and massif deformation, the methods of mathematical statistics and the theory of errors for processing and analyzing the data

of field observations of displacement and deformation were used.

2. METHODS

2.1 Overview of the construction technology

The technology of excavation, types and models of tunnel boring machines are determined depending on the engineering-geological conditions of construction. The issues of using the technology of tunnels construction with the use of TBMCs have been discussed in many works and normative documents [6-8, 10-16].

For tunneling in difficult geological conditions, shields with active work face earth pressure balance are used. The construction technology will be considered from the point of view of impact on the massif on the example of TBMC Herrenknecht AG with work face earth pressure balance (Figure-1).

Figure-1. Tunneling shield Herrenknecht.

Excavation of tunnels with the use of a shield with earth pressure balance is based on the principle of supporting for the work face crown by excavated rock due to creating proper balance between the amount of excavated material placed in the chamber at the work face and maintained under pressure due to the shield movement, and the amount of material removed by the screw conveyor.

Unlike in traditional mechanized complexes with shields (e.g., KT-5,6), which are widely used in the practice of tunnel and subway excavation in Russia, excavation and rock extraction, shield advancing and injecting the solution into the space behind the lining occur simultaneously. The complex is only stopped for the period of installation of the next block of ring lining.

The tunnel-boring complex mainly consists of two main parts - the tunneling shield and the handling dolly. In turn, the tunneling shield is divided into three sections: head, middle and tail. The diameters of these elements are different, which creates the tapered geometry of the shield.

In the head section, the working body and the main drive are located. The middle section is the main bearing structure of the shield, where the shield jacks are located. The tail shell, under the protection of which the next lining ring is assembled, has a system of brush seals (which hermetically separate the space behind the lining), and a system for pumping cement slurry into the space behind the lining.

After loosening with the working body, soil is passed to the chamber close to the work face, where it is mixed with conditioning additives and is used for maintaining stability of the work face crown. Sensors for measuring the pressure in the chamber near the work face are located on the partition. The material extracted by the screw conveyor is sent to the belt transporter of TBMC, and then is loaded onto the tunnel conveyor and moved to the surface.

The space between the excavation cross-section and the outer surface of the lining, which is left by the shield as it advances, is filled by simultaneous injection of cement mortar. The injected amount is determined based on the theoretical volume of the space behind the lining. Depending on the selected mode of excavation, the volume for 100% filling the space behind the lining may be pumped, as well as the excessive volume of 120% of the theoretical value.

With the help of a dual-axis tiltmeter (inclinometer) and binding of the target set in the area of the pressure chamber gateway, excavation parameters are determined, such as horizontal and vertical trend of the shield, pitch and roll, horizontal and vertical deflection rotor and tail part from the designed axis.

2.2 Mining and technical features of construction of the main line tunnel in the Frunzensky radius of the St. Petersburg subway

Excavation of the first double-track tunnel of the St. Petersburg subway between stations “Yuzhnaya” and “Prospekt Slavy” was finished in July 2015. The considered part includes three stations. Construction was performed with a tunnel-boring complex made by Herrenknecht with earth pressure balance, the diameter of the rotor of which was 10.65 m [9]. The outer diameter of the lining rings was 10.3 m, internal - 9.4 m. Each ring consists of 6 blocks and a locking segment. The average width of the lining ring along the tunnel is 1.8 m.

Between stations “Yuzhnaya” and “Dunaysky prospekt”, the depth of laying the arch of the tunnel varied in the range between 1.0 to 1.5 diameters, the slope of the track was 0.003. In this part, construction was performed in completely unstable soils - moraine loams. The base of the tunnel was clay soils and semi-solid and solid consistence. The soil column is almost dry. In the moraine soil column, water-saturated sand lenses were observed. In such geological conditions, the profiles that are used during tunnel excavation greatly influence the stress-strain state.

The main subsystems that influence the undermined massif were the subsystem of work face earth pressure balance, the subsystem of pumping into the space behind the lining, and the subsystem of shield movement.

In this tunneling complex, the pressure in the chamber close to the work face was monitored by seven sensors located at several levels, on the left and on the

right of the drive. The main ones were the sensors located at the level of the arch and the tray.

The space behind the lining was filled with cement slurry through six pressure lines. The gap between the outer contour of the lining and the mined out space varied between 175 mm and 210 mm. This value was also influenced by the inclination of the shield during construction.

The distinctive feature of this excavation was the use of the technology of excessive pumping into the space behind the lining. According to the regulations, the volume of the injected cement slurry had to be 120% of the theoretical one. In practice, however, this value varied within a wide range between 105% and 130%.

The amount of injected slurry was monitored for each ring with volume sensors located in the pumps of the injection system, which are indicators of pump pistons stroke.

The cement slurry itself was a mixture of sand, cement, bentonitic powder, fly ash and water. This solution retained motility for 8 hours.

2.3 Field studies of the rock displacement and deformation processes

The comprehensive study of the displacement and deformation processes, which manifest themselves during the construction of underground structures, requires an integrated approach. It involves creating a coherent system of monitoring the surface, the massif, and the infrastructure utilities in the affected area.

In Russia, monitoring of the Earth's surface in tunnel construction is regulated by the list of normative documents [3, 5]. According to [5], a monitoring station should consist of lines of reference points located across and along the axis of the tunnel.

During the construction of the main line tunnel between stations "Yuzhnaya" and "Prospekt Slavy", the profiles of the reference points were placed in the zones of undermining of important facilities (buildings, highways, and railways). Observations were performed by JSC "Firm "GIRO" with the periodicity of once in two weeks. The vertical and the horizontal components of displacement were recorded by geodetic methods. Due to the fact that the main goal of this monitoring was ensuring the safety of the undermined facilities, the location of profiles of observation stations, the distance between the reference points, and the frequency of measurement did not allow further use of this information for studying the patterns of development and distribution of surface deformations. The distance between the reference points in the profile line ranged from 28 m to 70 m. Displacements had been monitored for two years. This rather long period of observations gives an opportunity to detect changes in the nature of surface displacement after the construction of an object, to assess manifestation of creeping deformation.

Also, the specialists of surveying services of CJSC "Metropodzemstroy", who were directly involved in shield navigation, organized the monitoring of the surface above the axis of the tunnel. Leveling by these reference points was made on a daily basis. The vertical component of the displacement process was monitored.

Modern methods of monitoring the massif allow obtaining comprehensive information about its stress-strain state. In construction of the double-track tunnel of the Frunzensky radius, the massif was monitored by OAO R&D Design & Survey Institute "Lenmetrogiprotrans" using borehole extensometers located along the axis of the tunnel. These systems allow observing relative vertical displacement of rock massifs in automatic mode. Their use is regulated by the "Methodological Guide to Complex Mining and Geological Monitoring During Construction and Operation of Transport Tunnels" [5]. In the section in question between stations "Yuzhnaya" and "Prospect Slavy", the total of five such wells were placed close to the responsible infrastructure facilities. Due to the fact that the thickness of the rock roof there was commensurable with the diameter of the tunnel, two anchors were placed for detecting the vertical component of the displacement and deformation. The first one was located at the depth of 4.0–6.5 m from the surface, and the second - three meters deeper, but not closer than 3 m to the roof of the future tunnel. The values were read automatically every 3 hours.
To monitor the displacement of the first undermined building, and for further study of the nature of surface deformation, the Department of Surveying of the St. Petersburg Mining University organized monitoring based on robotized tacheometer Trimble s8 [1]. This device allows obtaining data about the displacement for a wide array of reference points in automatic mode. According to the specification of the device, the accuracy of measuring angles is 1", the accuracy of measurement of distances with the prism (standard deviation) is 1 mm + 1 mm/km.

The tacheometer was set 70 m from the building within direct visibility of the surveyed object and the potential locations for the reference prisms. To ensure stability and preservation in the process, as well as direct visibility to the monitored object, the device was installed on a thick-walled tube in concrete 155 mm in diameter, rigidly fixed with deepening and cementing below the level of soil freezing.

Deformation marks, which were reflectors, were placed in two levels on the bearing walls around the outer perimeter every 6 to 12 m apart in the corners, at joints of the building blocks of the angling part of the building. The total of 14 prisms was installed in the building. Three other reflectors were placed on the lean-to of the "Magnit" [Magnet] shop.

To study the geomechanical effects on the surface during construction, two deformation reflectors were placed above the axis of the tunnel in the vicinity of the building. Displacements were monitored automatically every 15 minutes.

3. RESULTS

3.1 The results of monitoring displacements and deformations in the containing massif

By the results of monitoring, the non-standard nature of massif deformation was found. Analysis of the

data from well 2 shows that undermining results in an abrupt massif displacement, followed by a more gradual uplift, which stops at a certain level over time. Well 2 were located outside the Ring Motorway (RM) above ring No. 76. Comparison of the results of monitoring with the parameters of the shield promotion revealed that the displacements started manifesting themselves at a moment of mounting ring No. 78. As the diagram (Figure-2) shows, displacement of sensors occurred simultaneously, and a major surge of 4 mm occurred in a single cycle of measurement at the moment of mounting ring No. 79.

After that, the massif gradually lifted another 1 mm within a day, after which it stabilized and did not change its position until the moment of re-injection. By the results of surveys as of 03.03.2014, the wellhead lift was 18 mm. At the same time, this result cannot be considered final, due to the fact that according to the sensors, the process of massif displacement was still in progress at that moment.

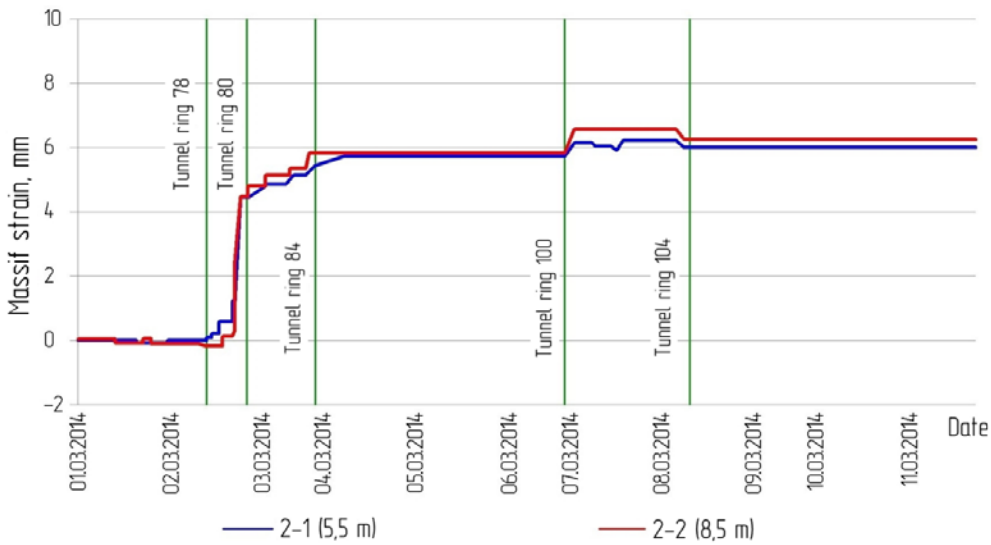

Figure-2. Graph of massif vertical displacements by the results of monitoring well 2 with sensors.

Studying the distribution of vertical displacements by the results of monitoring well 3 with sensors, one can note that most shifts here also occur within 24 hours (Figure-3). At the same time, the process of displacement is characterized by smoother uplift.

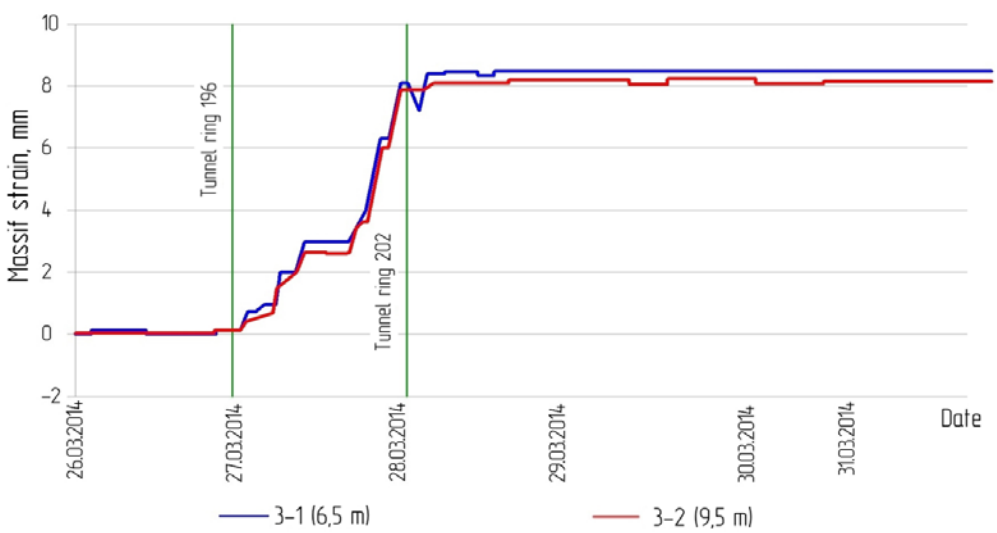

Figure-3. Graph of massif vertical displacements by the results of monitoring well 3 with sensors.

The process of sensors displacement started at the moment of mounting ring 196, which was 1 m from the well located above ring 197.

Surveying monitoring was performed daily from the moment of the first displacements. At the time when the value of sensor uplift was 1 mm, the surface uplift was

16 mm. With the values of displacements in the massif about 8 mm, surface displacements were up to 50 mm. It is also worth noting that with these uplift values, cracked opening of up to 4 cm appeared on the surface.

Massif monitoring with sensors showed that the end values of the displacements are implemented in the same way as in the previous cases during 24 hours (Figure-4). The first displacements were recorded at the moment of mounting the ring under the well. The maximum uplift of the massif was 3.5 mm. At the same time, unlike previous cases, minor settlement of the massif was observed within four days after reaching the peak uplift. According to the sensor located at the depth of 9.5 m, the final uplift at these depths was 3 mm, to the sensor at the depth of 6.5 m - 3.5 mm. According to the results of surveying measurements, the value of surface heaving on the third day after the start of displacement was 41 mm.

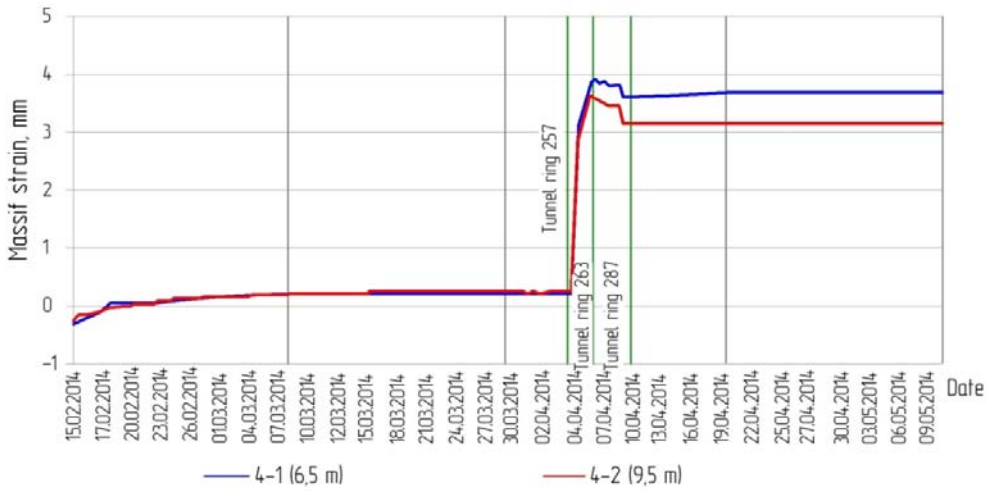

Figure-4. Graph of massif vertical displacements by the results of monitoring well 4 with sensors.

3.2 The result of long-term monitoring of displacements and deformations of the Earth's surface

By the results of monitoring of the ground reference points, massif uplift was detected. Analyzing the results of observations along the profile located at the embankments of the Ring Motorway (RM) (Figure-5), one should note that displacements caused by construction were only detected at reference point 11 closest to the center in the pothole of displacement (Figure-6). After undermining, the uplift here was 28 mm. Over the next year, the reference point settled by 8 mm by the end of the second year after undermining, the massif uplift was 14 mm. Because of the complex geometry of the profile and the large distance between the reference points, the data about the maximum massif uplift and the boundaries of the pothole could not be recorded.

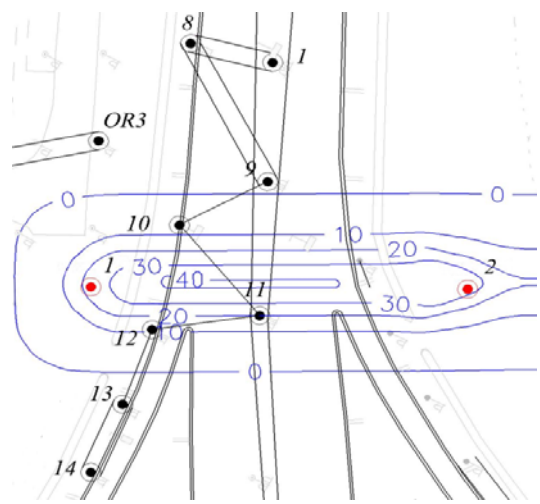

Figure-5. The profile of the ground reference points of the observation station on the surface and the structures of the Ring Motorway (RM).

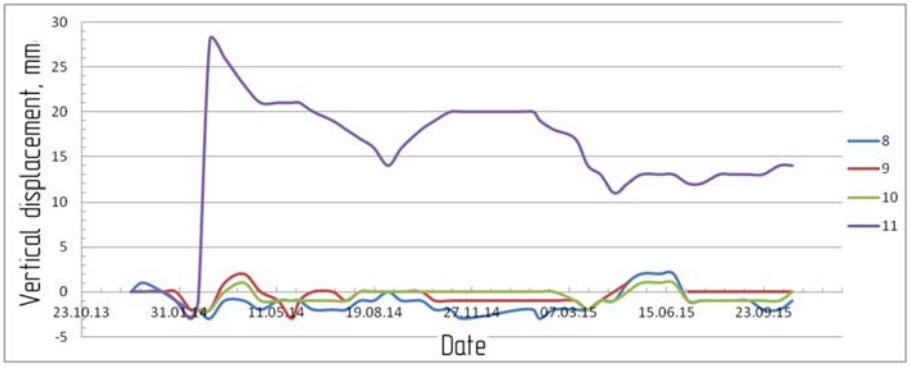

Figure-6. The chart of vertical displacements of the ground reference points of the observation station on the surface and on the RM structures.

According to the data obtained during leveling survey of another profile placed parallel to the undermined railroad tracks (Figure-7), the uplifts above the axis of the tunnel at reference point No. 138 was 17 mm; frame No. 133 lifted by 11 mm (Figure-8).

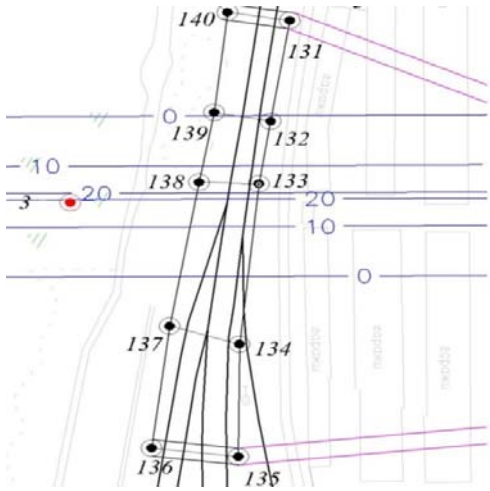

Figure-7. The profile of ground reference points of the surveying station along the railway tracks.

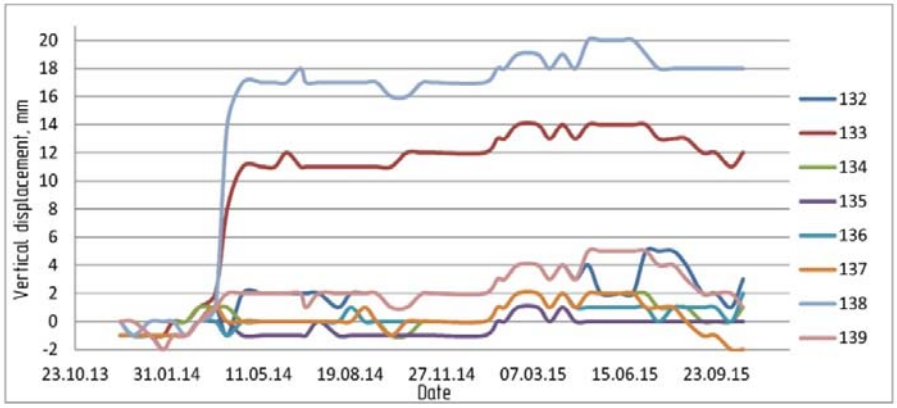

Figure-8. The chart of vertical displacements of ground reference points of the surveying station along the railway tracks.

3.3 Data from automated geodetic monitoring of the undermined building and the Earth's surface

By the results of monitoring, the maximum uplift value of the building was 2.5 mm, of the stop lean-to - 3.5 mm. According to the results of a posteriori estimate, the value of the round mean squared error (RMSE) was 0.3-0.4 mm. The greatest difference in horizontal displacements by paired reference points (which was identified in pairs 1.1 and 2.1) was 1.5 mm. Assessment of roll showed the value of 0.00006 perpendicular to the axis of the tunnel.

These values of additional deformation were a power below the threshold indicators in the regulations for general construction.

Most interesting are the data obtained by the results of monitoring the surface in the vicinity of the building. The maximum value of massif uplift was observed in point 1st, which was 15 mm after the process of displacement stabilized. At point 2st located 35 m away from the first point, the uplift was 10 mm. These values coincide with the results of leveling surveys performed by CJSC "Firm "GIRO" at the same reference points.

The use of the automated monitoring system allowed detecting the moment of displacements at the indicated points, the nature of these displacements, and identifying several geomechanical effects.

As one can see in the chart (Figure-9), displacement at point 2st occurred stepwise. The massif uplift by 5 mm occurred within 15 minutes at the moment of injecting cement slurry into the space behind the lining of ring 432 located under this point. During the next 24 hours, the massif lifted by 9 mm, and then stabilized.

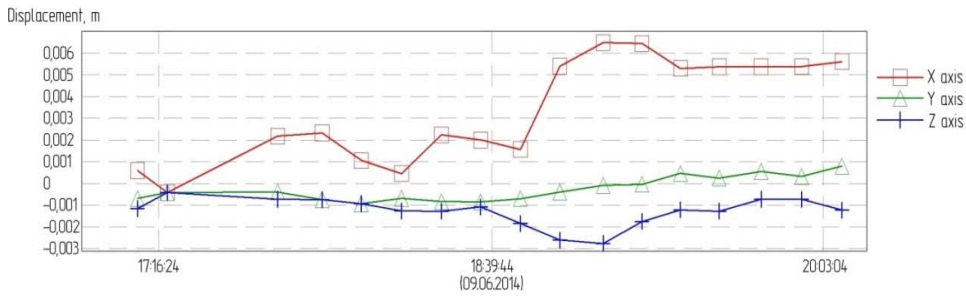

Figure-9. Graph of displacements at point 2st.

3.4 The results of joint consideration of the technological profiles of construction and monitoring data of the surface and the massif displacements

To assess the influence of the technological factors, the route of the considered double-track main line tunnel in the Frunzensky radius was divided into zones. In the process of this zoning three plots were allocated with similar mining and geological conditions, where tunneling was performed in the standard mode. They were further subdivided into eleven intervals, which tended to developing surface subsidence or uplifts, and where stable values of soil subsidence or heaving were observed.

The parameters that characterize the influence of main factors were indicators of work face earth pressure balance (the data of pressure sensors in the arch and the tray), indicators of the injection system operation in the space behind the lining (the volume of the injected solution averaged for the three rings), and indicators of the shield advancing system operation (tendency, rotor position). The influence of ring position in the worked-out space was also analyzed, which was determined by the position of its center and the gap between the bonnet of the shield and the arch. The criterion for assessing the degree of influence of the excavation on the surface was the maximum vertical displacement above the axis of the tunnel.

The first zoned part was considered separately, due to the fact that it was located in the area of PK244–PK248, in the area of the marsh sediments. In this area, the condition of the surface and the massif was assessed with the use of strain sensor (extensometers) located in the four wells above the axis of the tunnel.

Unfortunately, assessing the influence of variation of certain shield system performance indicators in this area is difficult, since the condition of the surface and the massif here had been assessed at separate points. At the same time, the fixed performance of the shield at the moment of undermining the extensometers allowed to determine separately the contribution of the subsystems separated in space, such as work face earth pressure balance and the system of pumping into the space behind the lining. For this purpose, the information about operation modes of the complex for the five rings before and after the considered point of space was considered (Figure-10).

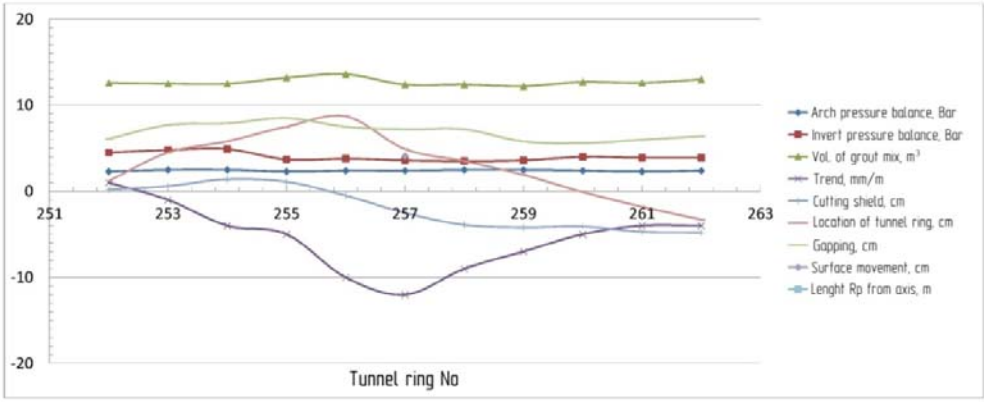

Figure-10. Graph of comparing excavation modes and surface displacement. Section 1 (Well 4).

Analysis of the monitoring data has revealed that displacements of sensors in the massif may start after the rotor and the main part of the shield passes underneath at the time of mounting lining rings and injecting cement slurry into the space behind the lining.

The second studied section was in the area of PK253-PK257, where the track crossed the Bucharestskaya Str. An interval has been allocated separately, where the process of excavation was marked by a sharp change in the level of occurrence of the Lower Cambrian clays along the track to the level of the midpoint diameter, while in the other sections of the track this clay layer was located at the level of the tray.

In the second section, the degree of influence of certain excavation modes on the surface was determined by the results of leveling surveys of the surface above the axis of the tunnel. In joint analysis of the data about the modes of shield advancing and vertical displacements of the surface, stable relationship was obtained with the high coefficient of determination between the volume of the cement slurry injected into the space behind the lining and the value of the vertical displacement of the surface. Steady uplifts occurred after injecting more than 110% of the designed amount (Figure-11). In case of injecting 105% to 109%, surface displacements were alternating; the average value of the displacements was close to zero (Figure-12).

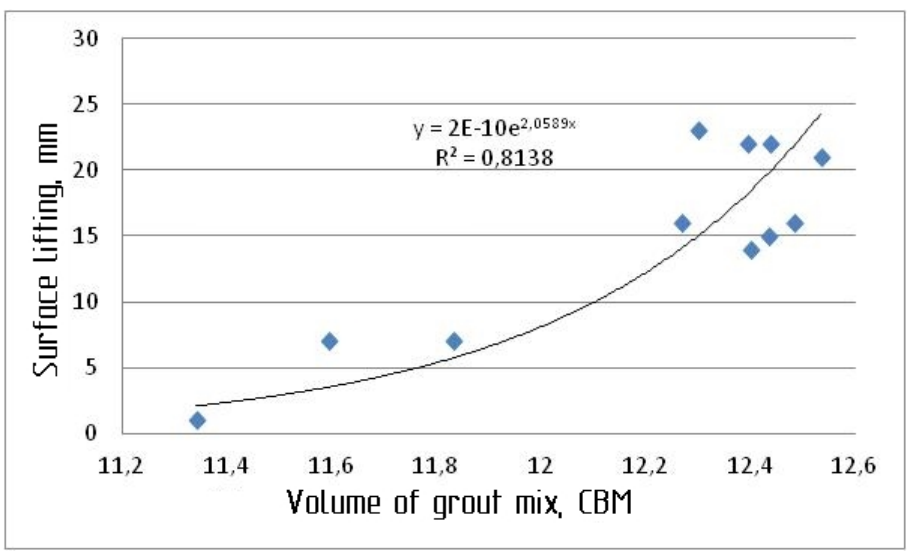

Figure-11. The graph of dependence of the surface uplifts above the axis of the tunnel on the injected volumes (the group of stable uplifts with effective over-injection).

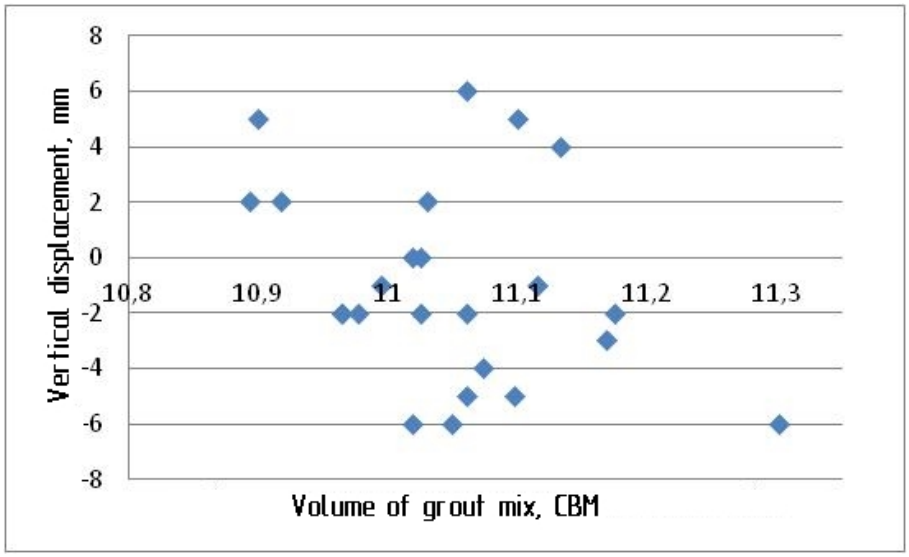

Figure-12. The graph of dependence of the surface uplifts above the axis of the tunnel on the injected volumes (the group of unstable uplifts).

4. DISCUSSIONS

Summarizing the results of studying the processes of surface and massif deformations during the construction of main line tunnels with modern TBMCs, the following main points should be considered.

Depending on the chosen technology and modes of excavation, excavation of small depth large diameter tunnels may result in significant surface settlement and uplifts.

According to the results of the field studies, long-term massif uplift patterns were detected during the construction of the double-track main line tunnel of the Frunzensky radius. Two years after undermining, the tendency to settlement was manifested only in the area where the reference points were located on embankments. In other sections, the values of heaving remained almost unchanged. Such nature of surface and massif deformation differs significantly from the one manifested earlier at other similar objects of study (the Lefortovo and the Serebryanoborsk transport tunnels in Moscow), where the uplift had temporary nature.

In the conditions of positive vertical displacements, the distribution of deformations is significantly different from the classical ideas about the development of subsidence potholes of the surface, where the maximum deformation of compression was manifested in the main cross-sections above the axis of the excavation. In this case, in the event of the so-called "anti-pothole" on the surface, an area of strains is localized above the axis of the tunnel, which may be even more dangerous for the undermined infrastructure than deformation.

Another feature of the identified geomechanical effects was the high rate of development and the discrete nature of displacement and deformation. The results of automated monitoring revealed that displacement of the entire layer occurs simultaneously, without significant deformation of the massif itself. The main surge of sensors occurs within one measurement cycle (3 hours). Displacements are stabilized within 24 hours (in the absence of re-injection). Surface deformation occurs in the same manner. According to the data of automated monitoring, up to 30-40% of the final values of vertical displacements develop in less than 15 minutes. In these conditions, monitoring the status of undermined strata, surface, and the aboveground infrastructure requires creating a multilevel interconnected system of automated monitoring. Such systems should allow recording displacements with high precision, and at intervals of no more than 15 minutes.

For the purpose of studying the influence of technological modes of construction on the containing massif and the surface, zoning was performed. Plots with similar mining and geological conditions were identified. The results of comparing the data of monitoring the Earth's surface above the axis of the tunnel and the modes of advancing the tunneling shield revealed the power-law relationship between the volume of excessive pumping of the cement slurry into the space behind the lining, and the value of surface vertical displacement. The primary effect of the degree of pumping into the space behind the lining is also confirmed by the results of massif monitoring with wells. In case of work face earth pressure balance, the first displacements of sensors were registered after the rotor and the main part of the shield passes underneath (at the moment of mounting the lining rings). The value of over-injecting cement slurry to the space behind the lining was also determined, at which the value of the surface displacement and deformation does not exceed the measurement accuracy - 105 to 109%. When the volumes equal to 110% of the estimated value were injected into the space behind the lining, stable surface uplifts were observed.

5. CONCLUSIONS

Construction of large diameter main line tunnels in densely populated areas of a metropolis has always been a complex engineering task. With the advent of modern TBMCs with earth pressure balance of the work face, it became possible to excavate small depth tunnels in water-flooded and unstable soils using the closed method. Such TBMCs are complex systems with each subsystem capable to directly and significantly affect the containing array. At little depths, the influence of the technological factors is prevailing, compared to the geological factors.

As we know, the existing methods of predicting displacements and deformations may be conditionally divided into three large groups: empirical and semi-empirical, analytical and analytical-empirical, mathematical modeling based on numerical methods. Of all these, only the numerical methods are capable of considering the features of active influence on the stress-strain state of the rock mass, including wide variation of excavation parameters. At the same time, direct use of numerical methods, such as the finite element method, without reliance on the field data, does not provide the results close to the reality. Verification of the same finite element models requires comprehensive information about the processes of the massif and surface deformation at analogous facilities.

The article presents and analyzes the data of monitoring the surface and massif deformation obtained during the construction of the double-track main line tunnel of the Frunzensky radius of the St. Petersburg subway, which will be used for further calculation of displacements and deformations in these mining and geological conditions. The effect of long-term surface uplift has been identified separately. At the same time, we cannot say that the process of massif deformation has been completely studied even in this particular case. According to the results of monitoring, there are no data about changes in the size of the semi-pothole during the construction with the use of various excavation modes. The majority of the ground reference points were located above the axis of the tunnel. The nature of deformations distribution in the massif has not been completely studied. Wells with extensometers were located only above the axis of the tunnel in the locations of the maximum deformations. However, a significant contribution into the final distribution of displacements is also made by horizontal deformations at the level of the medial diameter in sides of the excavation.

To summarize, it is worth noting that, despite the significant amount of field data and the performed studies, the problem of assessing displacements and deformation with the use of the technologies with active influence on the massif is still relevant. To study the features of rock and Earth's surface deformation in such conditions, it is necessary to organize experimental plots, where the effect of changes in the complex subsystems operation will be studied, such as the earth pressure balance and injection systems.

ACKNOWLEDGMENTS

The authors are grateful to the employees of the Department of Mine Surveying of the St. Petersburg Mining University for their assistance and support during the research. The authors would like to thank the Committee for Transport Infrastructure Development of St.-Petersburg, OAO R&D Design & Survey Institute “Lenmetrogiprotrans”, CJSC “Firm “GIRO” for providing the necessary data. We would like to thank the Management of CJSC “SMU-13 Metrostroy” and personally General Director S. D. Sepity for technical assistance in organizing and performing monitoring of deformations of the building, and Chief Surveyor of JSC “SMU-13 Metrostroy” V. A. Andrianov and Chief Surveyor of JSC “Metropodzemstroy” O. G. Saburov for methodological assistance.

REFERENCES

[1] Volokhov E. M. 2015. Problemi otsenki sdvizhenii gornih porod pri stroitel'stve krupnih gorodskih podzemnih transportnih sooruzhenii tonneleprohodcheskimi mehanizirovannimi kompleksami s aktivnim prigruzom zaboya [Problems of assessing rock displacement in construction of large urban underground transport structures with the use of tunnel boring mechanized complexes with active earth pressure balance of the work face]. Mine Surveying Bulletin. 5, 38-42.

[2] Volokhov E. M. 2015. Problemy organizatsii naturnih marksheiderskih issledovanii i geotehnicheskogo monitoringa pri primenenii sovremennih tehnologii stroitelstva podzemnih sooruzhenii [Problems of organizing field surveying research and geotechnical monitoring with the use of modern technologies of construction of underground structures]. Mining Information-Analytical Bulletin. 3, 27-30.

[3] Instruktsiya po nablyudeniyam za sdvizheniyami zemnoi poverhnosti i raspolozhennimi na nei obektami pri stroitelstve v Moskve podzemnih sooruzhenii [Guidelines for observing displacements of the Earth’s surface and the facilities located on it during construction of underground structures in Moscow]. RD 07-166-97: approved by the Resolution of Gosgortekhnadzor of Russia dated 17.09.97 No. 29: in effect since 17.09.97. Moscow. p. 42.

[4] Mazein S. V. 2013. Kompleksnii marksheidersko-geofizicheskii monitoring dlya geomehanicheskogo obespecheniya schitovoi prohodki pri osvoenii podzemnogo prostranstva megapolisov [Complex surveying-geophysical monitoring for geomechanical support of shield advancing in development of the

underground space of metropolises]. Author's diss. ... d-r of tech. sciences. Moscow State Mining University, Moscow.

[5] Metodicheskoe rukovodstvo po kompleksnomu gorno-ekologicheskomu monitoringu pri stroitel'stve i ekspluatatsii transportnih tonnelei [Guidelines for integrated mining and environmental monitoring in construction and operation of transport tunnels]. 2009. Moscow: URAN IPKON RAS, R&D Design & Survey Institute Lenmetrogiprotrans. p. 68.

[6] Pankratov M. S. 2012. Mehanizirovannie tonneleprohodcheskie kompleksi [Mechanized tunnel-boring complexes]. Moscow: Mosmetrostroy. p. 217.

[7] Sokolov M. Y. 2005. Mehanizatsiya tonneleprohodcheskih rabot. Chast' I. Prohodcheskie schiti [Mechanization of tunneling works. Part I. Tunnelling shields]. St. Petersburg: SPURR, Russian Ministry of Railways. p. 44.

[8] Sooruzhenie tonnelei tonneleprohodcheskimi mehanizirovannimi kompleksami s ispolzovaniem visokotochnoi obdelki [Tunnel construction with the use of tunnel boring mechanized complexes with high-precision lining]: IS NOSTROY 2.27.19. Branch of OJSC Central Scientific Research Institute of Construction Research Center Tunnels and Subways. 2011. Moscow: BST. p. 72.

[9] Tehnologicheskii reglament stroitel'stva dvuhputnogo tonnelya mezhdu stantsiyami "YUzhnaya" i "Prospekt Slavi" Sankt-Peterburgskogo metropolitena tonneleprohodcheskim mehanizirovannim kompleksom "Herrenknecht S-782" s gruntovim prigruzom i zhelezobetonnoi obdelkoi Dn/Dvn = 10,3/9,4 m [Technological regulations for construction of a double-track tunnel between stations "Yuzhnaya" and "Prospekt Slavy" of the Saint-Petersburg subway with the use of tunnel boring mechanized complex "Herrenknecht S-782" with ground earth pressure balance and reinforced concrete lining Dn/Din = 10.3/9.4 m]. In 2 v. (2013). St. Petersburg: GEODATA.

[10] Khrapov V. G. 1989. Tonneli i metropoliteni [Tunnels and subways]. Moscow: Transport. p. 383.

[11] Chumakov E. F. 2013. Primenenie innovatsionnih tehnologii pri stroitel'stve tonnelei i metropolitenov v Rossii i za rubezhom [Using innovative technologies in construction of tunnels and subways in Russia and abroad]. Subways and tunnels. 1, 8-10.

[12] Yang F. 2009. Tunnel Stability against Uplift Single F luid Grout. New York: Springer Science+Business M edia B.V. pp. 137-143.

[13] Mair R.J. and Gunn M.J. 1981. O'Reilly M.P. Ground movements around shallow tunnels in soft clay. Proc. 10-th ICSMFE. Vol.1. Rotterdam: Balkema. pp. 323-328.

[14] Monjezi M. 2012. Singh stability analysis of a shallow depth metro tunnel: a numerical approach. ARCH. MIN. SCI. 57(3): 535-545.

[15] O'Reilly M.P. 1982. Settlements above tunnels in the United Kingdom - their magnitude and prediction. Tunnelling. The Institution of Mining and Metallurgy. pp. 55-64.

[16] Peck R.B. 1969. Deep excavations and tunneling in so ft ground. Proc. of the 7th int. Conference on Soil Me chanics and Foundation Engineering. pp. 225-290.