VOL. 12, NO. 22, NOVEMBER 2017 ISSN 1819-6608
ARPN Journal of Engineering and Applied Sciences

www.arpnjournals.com

USING OF THE PNEUMATIC BLOW METHOD AT THE CONTACTLESS THRESHING OF GRAINS

Moskovsky M. N.[1], Kovaleva A. V.[2] and Kuren S. G.[3]
[1]Department of Technologies and Equipment of Processing of Production of Agrarian and Industrial Complex, Don State Technical University, Rostov-on-Don, Russia
[2]Department of Technology of Mechanical Engineering, Technological Institute (branch) of Don State Technical University, Azov, Russia
[3]Department of Operation of Transport Systems and Logistics, Don State Technical University, Rostov-on-Don, Russia
E-Mail: donstu.ru@ya.ru

ABSTRACT

The existing methods of the grains thresh possess a number of shortcomings that leads to a harvest shortage. The new way of the pneumatic threshes with elements of aero-technologies and acoustic vibrations was developed and tested. Efficiency of this method is confirmed by experimental studies. The economically reasonable technological process of impact on ear jet streams of air has been developed.

Keywords: pneumatic blow, threshing of grains, methods of the grain thresh, traumatizing seeds, aero-technologies of the thresh.

1. INTRODUCTION

The thresh of grain crops in modern agricultural production is carried out in thrashing mechanisms by mechanical impact on slanted grain weight blow method (classic thrashing drum) and shift method (rotor thrashing drum). These thresh processes turn out very power-intensive with a big share of traumatizing seeds, which reduce their seed and food qualities. The efficiency as the energy relation on separation of grain from an ear to all energy which is spent by the in thrashing mechanisms - is very low.

The thrashing mechanical drum is the most widespread working body of separators which forms together with the deck of mechanical thrashing mechanism. However intensive mechanical impact on an ear for the purpose of its destruction leads to mechanical damages of grains which reduce a rating of grain and sharply worsening its viability.

Low-quality seed material is a source of biological losses of a harvest. It is established [2] that in the presence in sowing material of winter crops of 40% of the injured seeds biological losses of productivity (a harvest shortage) make 0, 34 t/hectare, summer cultures - 0, 64 t/hectare at 60% the maintenance of the injured seeds in sowing material. The harvesting, seed cleaning and other mechanisms injure grain of bean cultures from 16 to 35%. The amount of the injured grain depends on design and adjusting data of the trashing-separating device of the combine harvester and humidity of grain at the thresh.

The shortage of a harvest made about the country 20-25 million t. because of low-quality seeds. Also to 60% of seeds get microinjuries at the thresh, and each 105 microinjuries reduce productivity by 10-12%; cause a shortage, at least 0,1t/hectare.

Interest in aero-technologies has increased in searches of more sparing ways of the thresh. The technological effect of these technologies occurs under the influence of air streams which don't cause damages of a surface of grain. High speed of the movement of air streams allows predicting high efficiency [1, 2].

The economically reasonable technological process of impact on ear jet streams of air has been developed.

2. MATERIALS AND METHODS

Direct impact on an ear an air stream like pneumatic blow [2] has shown insufficiently high the thresh effect and in too time a big consumption of air. It was offered to activate an air stream acoustic vibration for increase in efficiency of process of pneumatic blow and decrease in a consumption of air.

The experimental studies have been carried out f or this purpose.

The program of researches included:

- the development of factorial model of process of pneumatic blow;
- the development of the research model for factorial model;
- the studying by the simple not activated air stream threshing abilities of pneumatic blow;
- installation and setup of the activator for a maximum of acoustic intensity;
- the studying of the threshing ability acoustically activated air stream;
- comparison of efficiency and power consumption of options of pneumatic blow and assessment of efficiency of acoustic activation.

The factor model of pneumatic blow process by pneumatic blow has air pressure P_0 as independent factors, area of a nozzle F and distance between a nozzle and an ear L, and as a response - an ear thresh indicator $\delta = n_o/n_k$,

where n_k - number of grains in an ear; n_o - number of the separated grains.

Speed of the expiration V unambiguously depends on pressure in receiver P_0 on formulas of gas dynamics and isn't an independent factor.

The received factorial model of process pneumatic trashing thresh is given in Figure-2. Its entrance factors meet the requirement of completeness and independence.

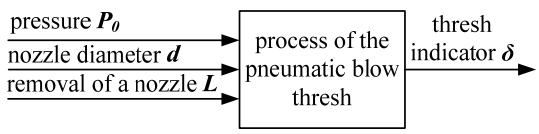

Figure-1. Factorial model of the pneumatic blow thresh.

Physical model of skilled installation was created for carrying out experiences. Its general view is presented in the Figure-2.

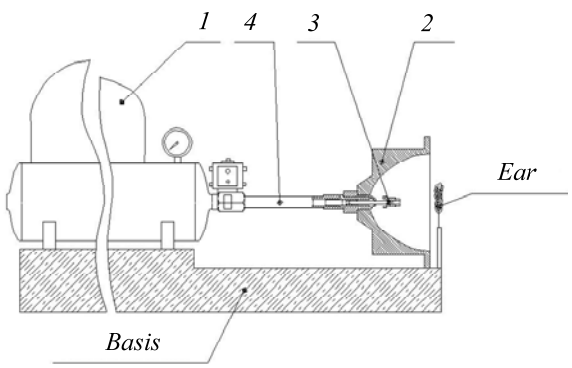

Figure-2. The scheme of the experimental setup.

1 - compressor; 2 - resonator; 3 - activator; 4 - branch pipe.

Physical model consist of the Good Air 2/50 compressor, pipelines, the spherical crane, a pneumo radiator with replaceable nozzles with a diameter of 4, 6, 5, 9 mm.

Technical characteristics of the compressor: power - 1,5 kW; receiver volume - 50 l; productivity - 222 l/min = 0,222 m^3/min = 13,32 m^3/hour. The maximum pressure - 8 bars; pressure is measured by compressor manometers, intensity of acoustic vibrations - the audio-noise meter.

The regression model of not activated pneumatic blow was linear. Carrying out an experiment is detail described in paper [2].

The equation of regression has an appearance:

$$Y=0,365+0,104X_1-0,114X_2+0,098X_3 \quad (1)$$

Most reached thresh indicator is $\delta=0,656$.

The jet generator of acoustic vibrations has been used as the activator of an air stream (Figure-3). The nipple with a core on which carving the resonator fastened was turned on. The current of air from a nozzle hits in the resonator and creates acoustic vibrations of high intensity.

a) activator of acoustic vibrations

b) resonator

Figure-3. The Gartman's generator.

The reflector of a parabolic form has been applied to receiving the directed fluctuations. The resonator can smoothly change the situation concerning a nozzle that allows adjusting the generator on a maximum of radiation [3].

Definition of position of the resonator at which radiation was as much as possible carried out experimentally. Intensity of acoustic vibrations from the jet generator during experience was carried out without contact of by the audio-noise meter Wensn's type. Position of the resonator, in case of which intensity reached the maximum value, 135 dB at a frequency of 6 kHz was found.

The experimental mathematical model has been chosen in the form of nonlinear regression model of the first order taking into account the nonlinear nature of process of acoustic vibrations generation. It can be presented in the following form:

$$Y = b_0 + \sum_{i=1}^{n}\sum_{J=1}^{m} b_{ij} \cdot x_{ij} \quad (2)$$

where $\boldsymbol{b}$ - vector of the factorial model parameters which is subject to definition as a result of an experiment. Number of factors $n=3$. Factors are similar to factors of not activated pneumatic blow. Such new factor as intensity of radiation doesn't vary, and 135 dB are established to the

maximum. This value has been found at tuning. Thus, this factor was considered uncontrollable that it is admissible the factorial analysis.

Designations and borders of change of factors are similar to not activated model and are given in Table-1. The size of a factor changes from minimum x_{min} to the maximum value x_{max}. Change range $\Delta=X_{max}-X_{min}$. X_0 - is average value of a factor.

Table-1. Borders of factors' change.

Name of factor	Designation	x_{max}	x_{min}	x_0	Δ	Code
pressure P_0, atm.	x_1	2,5	4,5	3,5	2	X_1
removal of a nozzle ***L***, mm	x_2	120	60	90	60	X_2
nozzle diameter ***d***, mm	x_3	9	4	6,5	5	X_3

The factors were coded according to a technique of planning of an experiment. The coding of factors was carried out on the following formula:

$$X_i=2(x_i-x_{i0})/\Delta_i,\ i=1, 2, 3. \quad (3)$$

Results of the coding are given in Table-2.

Table-2. Coding of factors.

Name of a factor	Code	X_{max}	X_{min}	X_0
pressure P_0	X_1	1	-1	0
removal of a nozzle ***L***	X_2	1	-1	0
nozzle diameter ***d***	X_3	1	-1	0

The full-factorial plan with star points and number of experiences of $N = 15$ has been chosen. The matrix of planning and the received results is given in Table-3.

Table-3. Planning matrix of an experiment.

№	x_0	x_1	x_2	x_3	y_1	y_2	y_3	y	y_{calc}
1	1	1	1	1	0,3	0,5	0,4	0,4	0,42
2	1	-1	1	1	0,2	0,3	0,3	0,3	0,27
3	1	1	-1	1	0,7	0,7	0,6	0,8	0,7
4	1	-1	-1	1	0,4	0,4	0,4	0,4	0,45
5	1	1	1	-1	0,3	0,2	0,3	0,2	0,24
6	1	-1	1	-1	0,1	0,2	0,1	0,1	0,1
7	1	1	-1	-1	0,5	0,4	0,4	0,4	0,42
8	1	-1	-1	-1	0,2	0,4	0,3	0,3	0,28
9	1	0	0	1	0,5	0,5	0,4	0,5	0,44
10	1	0	0	-1	0,3	0,2	0,2	0,2	0,26
11	1	0	1	0	0,4	0,6	0,5	0,5	0,46
12	1	0	-1	0	0,7	0,6	0,6	0,6	0,64
13	1	1	0	0	0,4	0,5	0,5	0,5	0,48
14	1	-1	0	0	0,4	0,4	0,3	0,4	0,33
15	1	0	0	0	0,4	0,5	0,5	0,5	0,48

3. EXPERIMENTS AND ANALYSIS

The ear was fixed in a clamp of the reactive camera when carrying out experience; the compressor was switched on further, pressure in a receiver rose to the necessary value which is provided by a planning matrix. Then the spherical valve opened, the current of air struck in an ear and threshing grains at the same time. The amount of grains which remained not selected was counted in the threshed ear. Then the thresh index δ was counted. At the same time in 1-8 experiences of depletion of a receiver when pressure falls to 1 atm was defined.

This time was considered as an index of the expenditure of air.

Experiments have been made three times. The received indicators of the thresh are given in Table-3.

The statistical analysis of data has been included in mathematical processing of results of pilot study, and also have been included check of values of a response to existence of mistakes by Student's t-criterion, check of uniformity of dispersion by Kokhren's criterion. The reached dispersion of reproducibility of all experiment is equal $S^2 = 0, 0038$.

The vector of empirical values $Y = \{y_i\}, i = 1, N$ has been created after all checks. The vector of coefficients of regression was determined by matrix expression:

$$\overline{b} = D \cdot F^T \cdot \overline{Y}, \quad (4)$$

where $D = (F^T \cdot F^{-1})$.
The received regression equation in codes:

$$Y=0,474+0,084\cdot X_1-0,099\cdot X_2+0,098\cdot X_3-0,637\cdot X_{12}+0,07296\cdot X_{22}-0,123\cdot X_{32}. \quad (5)$$

Calculated values Ŷ have been calculated on the regression equation for each experience. Results are also given in Table-3.

Adequacy of regression model has been checked by Fischer's criterion.

We have compared the received statistics $F = 1,478477$ to tabular value of criterion of Fischer F_{table} at significance value 0, 9 and number of degrees of freedom $k_1=N-n_b = 15-3=12$; $k_2 = N(m-1)=15(3-1)=30$. From the table $F_t=2, 7$. The condition $F<F_t$ is satisfied. It means that the model is adequate.

$$Y=-0, 7369+0,529 P-0, 0179L+0,2965D-0, 063P^2+0, 0000810L^2-0, 01979D^2 \quad (6)$$

The received most reached indicator of the thresh is equal 0,75 that is 15% more in comparison with value in not activated stream (0,656). The greatest indicator of the thresh is reached at the nearest influence – L=60sm to an ear, d=7,5mm, P =3,5 atm. Percent of the thresh of 64,62%.

Comparison of the pneumatic thresh ways. The uniform technique of carrying out pneumatic thresh allows to carry out by different ways (pneumatic thresh and the activated stream) allows to make an objective comparison of their efficiency.

Comparison shows that 100% of the thresh weren't succeeded to reach by no one mode. But the thresh indicator by the activated stream on average is 15% higher. The main advantage is decrease in a consumption of air by 2, 2 times that significantly lifts efficiency of the device.

4. CONCLUSIONS

a) The analysis of the known researches showed that despite wide use of aero-technologies in grain production (crops, purification of grain, separation, pneumatic transport), these methods doesn't find application at the thresh of cultures grains; traditional mechanical the trashing devices leads application to the increased grain traumatizing (crushing, microdamages at combine cleaning reach 80%).

b) The new way of the pneumatic thresh was developed and tested by the directed air streams of two types: like pneumatic blow and a stream which was activated by acoustic vibrations. Range of source pressure of jet currents (1, 88-4, 8 atm) was established. The movement of the drowned air stream is steady and isn't washed away in this source.

c) The easiest way of realization of pneumatic blow is expiration of air through a conic nozzle. The thresh indicator is estimated on average as 40%. Pneumatic blow demands a big consumption of air and energy, its efficiency is low - about 3% that does its application energy-intensive and unprofitable for practice.

d) It's possible to improve considerably pneumatic thresh indicators by activation of an air stream acoustic vibrations of sound frequency from the jet generator which is built in a nozzle of the bringing pipeline.

e) The rod generator of acoustic vibrations with a parabolic reflector and the relation of the resonator diameter to the nozzle diameter is equal 1, 6 and with a frequency of fluctuations about 6500 Hz gives the best results.

f) Pneumatic thresh by streams which are activated by acoustic vibrations by intensity 135 dB, gives small increase in an indicator of the thresh in comparison with simple pneumatic blow for 15%, but gives big decrease in a consumption of air by 2, 2 times; at this efficiency grows to 9% that for aero-technologies is considered already normal.

g) Rational constructive and regime data of the pneumo threshing device with activation by means of acoustic vibrations were proved. Maximum efficiency of the thresh - 65% is observed with a pressure of 3 atm, diameter of a nozzle of 10 mm and its distances on 50 mm.

REFERENCES

[1] Avdeev N.E. 1997. Problems of energy saving and tendency of development of technology of separation. Bulletin of Russian Academy of Agricultural Sciences. (5): 76-78.

[2] Ignatenko I.V., Moscow M.N., Nemchin G. A. 2015. Laboratory researches of pneumoshock technology of the thresh of grain crops. Innovative technologies in science and education. Rostov-on-Don - Zernograd: Federal public budgetary scientific institution "Agrarian scientific center "Donskoy" Structural division North Caucasian research institute of mechanization and electrification of agriculture. pp. 422-429.

[3] Loytsyansky L.G. 1968. Mechanics of liquid and gas. Moscow: State technical publishing house.