VOL. 12, NO. 24, DECEMBER 2017 ISSN 1819-6608
ARPN Journal of Engineering and Applied Sciences

www.arpnjournals.com

DESIGN AND DEVELOPMENT OF ELECTRONIC COOLING AND HEATING PAD FOR HOT AND COLD THERAPY

A. R. H. Alhawari, A. F. Alshehri, M. A. Alwadi, F. A. Blih, A. H. M. Almawgani and A. S. Alwadie
Department of Electrical Engineering, College of Engineering, Najran University, Saudi Arabia
E-Mail: aralhawari@nu.edu.sa

ABSTRACT

Parallel to the nowadays technological advancement in general, the hot and cold therapies also went into inevitable enhancement from what it used to be as they are among the key physiotherapeutic treatments. The enhancement is always aiming for offering a more flexible, more effective, easier and more comfortable to handle whether by physiotherapists or patients themselves if used at home. This paper introduces an innovative yet simple engineering method in the usage of hot and cold treatment replacing the traditional idea. It is electronically designed using Arduino, which was tested and validated, which demonstrates the effectiveness of the proposed approach. The efficiency shows in terms of high safety measures, low cost of fabrication and usage, resilient as functioning automatically in all-weather conditions with agreeable stability of temperature on the area of patients' body during treatment.

Keywords: arduino, cooling pad, heating pad, physiotherapy, sensor.

INTRODUCTION

The Hot and Cold Therapy are prominent effective treatment [1] in physiotherapy for instance in order to relieve pain of muscle or joint [2]. It is characterized as non-invasive [1], [2], passive, and non-addictive therapies [1]. They can be used either one respectively, or alternately and are commonly used as warming-up session to exercise therapy [1]. Heat Therapy is atypical physiotherapeutic treatment applied especially for various sports related musculoskeletal injuries. Only the injury and the time factor will determine the suitable method of applying it [3]. It is found more therapeutic for the chronic phase of an injury or returning pain [2]. Other than that, it is also introduced before any physiotherapy or exercise session to promote muscle flexibility and range of motion like the ones used for pain management, reduction of muscle spasms, muscle tension and joint stiffness.

The tool that is usually used in hot therapy is called "hot packs". It is used to dilate blood vessels in order to increase blood flow circulation (vasodilation) to the affected area, so, it can supply more oxygen and nutrients for it to accelerate healing and elimination of cell wastes. Besides, the warm sensation also soothes the pain area as it relaxes sore muscles, ligaments, and tendons. The dry forms of hot packs are electric pads, hot water bottles and gel packs. Apart from it, there is wet type like damp clay packs, which is more ideal compared to the dry heat for its deeper penetration into the muscles, ligaments and joints without drying it [1], [4], [5]. However the warm temperature must be consistent throughout each healing session[2].

Any type of choice should be carefully handled by covering it with some layers of towel-like materials to protect the skin from irritation or burns if applied directly. Another precaution is to avoid using heat for the acutephase of an injury when swelling is present and the skin is hot or inflamed to touch [2], [5] or onto an open wound or healing one. Also it is not advisable to apply heat therapy to an area for longer than 15-20 minutes [6] and must reapply only after 60 minutes after previous application; unless consulted by a healthcare practitioner like physiotherapist or physician. It is not suitable for those suffer from poor circulation or diabetes. Furthermore, if application is from an electric heat source, extra safety measures should be practiced by switching off the timer or plug in order to avoid burns from overheating tools [2], [4].

Alternative term for Cold Therapy is "Cryotherapy" means the localized or generalized use of low temperatures in medical therapy. The term "cryotherapy" originates from the Greek cryo (κρύο) meaning cold, and therapy (θεραπεία) meaning cure. It is usually used to treat various benign and malignant tissue damage, medically called lesions [7]. The cold therapy is specified for fresh acute injury for instance abrasion, strains, sprains and post-operative pain. In order to decrease blood circulation and tissue metabolic rateto the affected area, so, it will reduce inflammatory reactions like swelling orbruised or edema. The cold sensation will ease muscles spasms and pain as well as accelerate healing process. Types of cold therapy forms are like ice massage, immersion in cold water, contrast baths, cold packs, Cryokinetics [8], Cryocuff [9], Cryostretching [10]and vapocoolant spray [2], [11].

In physiotherapy, it is applied for number of circumstances like shrinking swollen area and edemapost trauma, gradually halting spasticity, relaxing muscle spasm, relieving pain, diminishing reaction of acute inflammation after an injury and increasing local blood circulation. When the temperature of the skin is lower, it actually induces analgesic or numbing effect, which is essential in pain management. Skin temperature is also decreased, inducing an analgesic or numbing effect that plays an important role in pain management[5].In some cases, it aids re-educating muscle contraction especially to increase movement range in joints of damaged limbs.

According to research, cold compression is more effective towards acute injury management[11].

The cold therapy should not be applied more than 20 minutes at regular intervals within 24 to 48 hours after an injury occurred. But it has to be safely covered in layers of hygienic towels to avoid irritation to the skin from direct contact especially taken from the freezer at the temperature -18 ºC. In order to avoid skin damage limit the usage from 5 to 20 minutes and intermittently checking the skin condition about every 5 - 10 minutes each to detect any negative reactions like appearance of small white spots, which means overcooling and treatment must be ended. Patients with these particular problems: having area of altered skin sensation and other contraindications include Reynauds Disease, lower limb ischaemia, cold allergy and vascular impairment must avoid cold therapy [2], [11].

The cold therapy has to comply with the PRICE procedure where skin injury concerns; specifically for acute sports injuries in order not to further aggravate the injury or to stimulate infection like combining the ice with an antiseptic. The P.R.I.C.E. Principles is an acronym, which stands for Protection, Rest, Ice, Compression and Elevation. Each component of the P.R.I.C.E. principle plays an important role in edema (swelling) and pain management of the injury. It is advised to apply the said procedure immediately post-injury up to at least the first 24-72 hours. Early treatment and correct application will significantly accelerate the recovery period, which is critical for the athlete[12].Other than above-mentioned cases, cold therapy is also good to heal cold sores and blisters, which can be applied up to 2 hours to the affected area like commonly occurred at the mouth, feet, hands or elbows [13].

Apart from being used separately both hot and cold therapy can be combined in certain treatments to heal injury especially in beginning of a rehabilitative or exercise program as when applied together, the hot and cold therapy assists pain management, promotes tissue healing, controls swelling, and intensify flexibility [4]. The combination of both therapies in healing treatment is named “Therapeutic Contrasting”, where the temperature is swiftly alternately applied between cold and hot on the injured tissue. It is usually used onto serious athletes who need to get healed fast for the next competition. The contrasting therapy works by stimulating the affected area without stress, and strong sensations without movement, which is exciting metabolic activity and blood circulation. But it is not suitable for fresh injury as it will only worsen it; unless after 3 days of injury, like an ankle sprain to soothe it. It is more effective for injury on the limbs like plantar fasciitis, shin, splints, carpal tunnel syndrome, tennis elbow, and Achilles tendinitis. It is usually applied by immersion, or wrapping. Contrasting procedure basic pattern is applying 3 to 6 alternations between heating and cooling. More nor less is neither effective [14]. It is listed among alternative treatments using the techniques through “Thermal Contrast Therapy” and “Transcutaneous Electrical Nervous Stimulation”(TENS)[15], [16].

The main problem detected that requires dire solution is consistently maintaining the stability of the certain temperature needed for the therapy either cold or hot or alternately along the cycles of physiotherapy session respectively to effectively heal [2]. Too cold or hot (more than warm) may harm human bodily system and disturb its stability from within at cellular level. Thus, the idea of this project is to overcome the said problem integrating computer programming into the circuit of the design. It is capable to create various executive write-up commands, therefore, more flexible and easier for professional or even personal usage at home.

This paper reports an automatic electronic design of a modern efficient cooling and heating pad for effective hot and cold therapy. It is more economical, easy to use, and fortified with higher safety measures especially in dealing with temperatures. Afterwards, the proposed design is optimized and validated.

IMPLEMENTATION OF ELECTRONIC COOLING AND HEATING PAD SYSTEM

The hardware and software description of the electronic cooling and heating pad system is described in the following sub-sections.

System hardware description

Figures 1 and 2 shows the system hardware of the designed electronic pad. The main components of proposed system are Arduino (UNO), LCD, temperature sensor (LM35), two relays (5 volts), three push buttons, test circuit board, three resistors with 10k Ohms and cables. Microcontroller such as PIC16F877A [17] and Arduino are an open-source platform [18] used for constructing and programming electronic systems [19], [20]. It is capable to exchange (send or receive) information within most present devices and execute commands via the internet to the specified electronic device. LCDs are easily interfaced with the Arduino [21].

VOL. 12, NO. 24, DECEMBER 2017 ISSN 1819-6608
ARPN Journal of Engineering and Applied Sciences

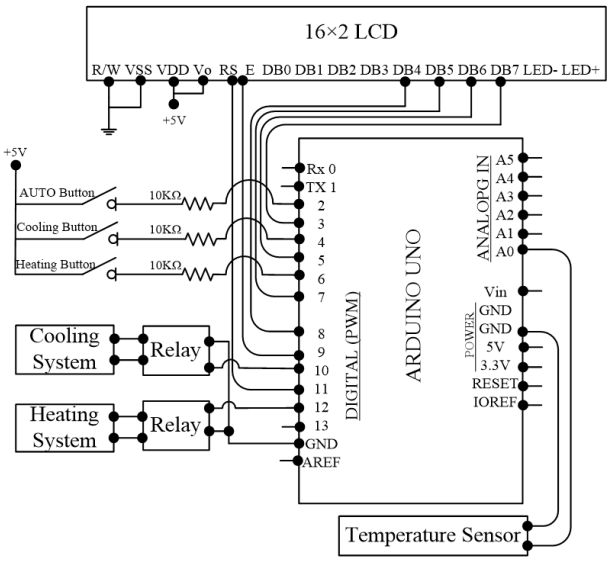

Figure-1. Circuit schematic diagram.

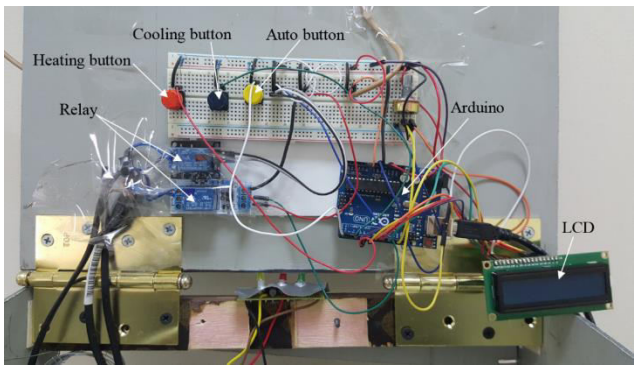

Figure-2. Hardware circuit of the proposed system.

System software description

In this work, programming environment processor and the microcontroller Arduino are the two most critical tools in developing the system design together with other embedded systems [22]. Regarding the above-mentioned components, they areintegrated into one system, where the Arduino controls and processes the information as well asexecutes commands into the proposed system to effectively work as follow:

- The heat sensor provides the Arduino the body temperature and this process will be periodically if body temperature > 37 ºC, then the pump starts pushing the cold water to the pad through compressor.
- After that, the Arduino will switch off the pump after ten (10) minutes.
- Also, the user can run the pump as hot water or cold water by using the manual start button to treat infections, calm pain, and apply natural therapy without relying on heat sensor.

The developed method for designing electronic cooling and heating pad is illustrated in a flow chart shown in Figure-3, where:

T_b : Patient's body temperature
T_c: Water temperature inside the heating water tank
T_h: Water temperature inside the cooling water tank

The code used is as follows:
[code]

```
#include <LiquidCrystal.h>
intval;
int Tb = A0;
intTc = A1;
intTh = A2;
intcoolpump = 12;
inthotpump = 10;
constintatuo = 2;
constint cool = 4;
constint hot = 6;
LiquidCrystallcd(8, 11, 5, 9, 3, 1);
void setup()
{
```

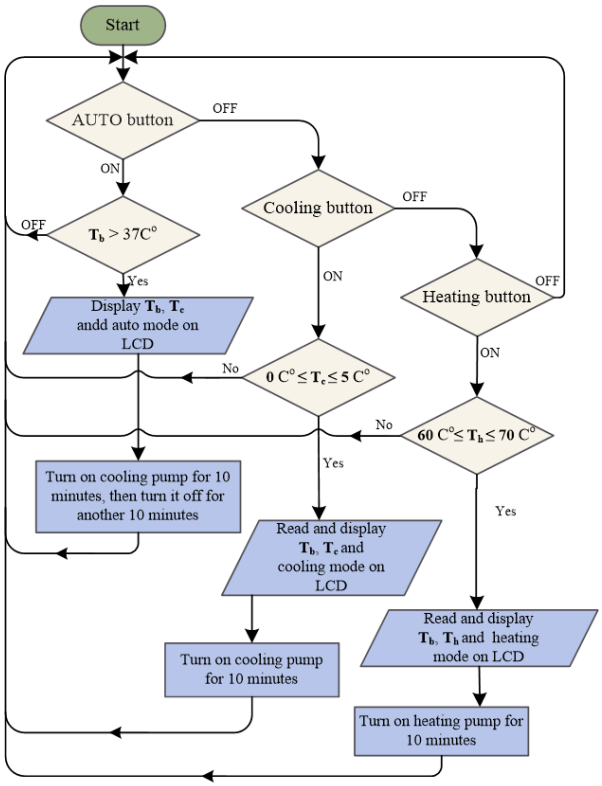

Figure-3. Flow chart of electronic cooling and heating pad design process.

```
Serial.begin(9600);
pinMode(coolpump, OUTPUT);
pinMode(hotpump, OUTPUT);
pinMode(atuo, INPUT);
pinMode(cool, INPUT);
pinMode(hot, INPUT);
lcd.begin(16, 2);
lcd.print("Cooling and Heating Pad ");
delay(2000);
```

```
}
void loop()
{
val = analogRead(Tb);
float mv = ( val / 1024.0) * 5000;
floatcel = mv / 10;
floatfarh = (cel * 9) / 5 + 32;
lcd.clear();
lcd.setCursor(0, 0);
lcd.print("Tb= ");
lcd.print(cel);
lcd.print("C0");
lcd.setCursor(0, 1);
if (digitalRead(atuo) == LOW )
  {
if (cel>= 37.5)
    {
lcd.print("ATUO Mode");
val = analogRead(Tc);
float mv = ( val / 1024.0) * 5000;
floatcel_c = mv / 10;
lcd.print(",Tc= ");
lcd.print(cel_c);
lcd.print("C0");
digitalWrite(coolpump , HIGH);
delay(100000);
digitalWrite(coolpump, LOW);
delay(100000);
    }
  }
else if (digitalRead(cool) == LOW)
  {
val = analogRead(Tc);
float mv = ( val / 1024.0) * 5000;
floatcel_c = mv / 10;
if (cel_c>= 0 &&cel_c<= 10)
{ lcd.print("Cooling Mode");
lcd.print(",Tc= ");
lcd.print(cel_c);
lcd.print("C0");
digitalWrite(coolpump , HIGH);
delay(100000);
digitalWrite(coolpump, LOW);
delay(100000);
    }
  }
else if ( digitalRead(hot) == LOW)
  {
val = analogRead(Th);
float mv = ( val / 1024.0) * 5000;
floatcel_h = mv / 10;
if (cel_h>= 60 &&cel_h<= 70)
{ lcd.print("Heating Mode");
lcd.print(",Th= ");
lcd.print(cel_h);
lcd.print("C0");
digitalWrite(hotpump, HIGH);
delay(100000);
digitalWrite(hotpump, LOW);
delay(100000);
    }
  }
}
[/code]
```

SYSTEM AND WORKING PRINCIPLE OF THE PROPOSED DESIGN

Figures-4 and 5 below show a photograph of the final design of the proposed electronic cooling and heating pad system. In this system, Arduino, LCD, temperature sensor, relays, push buttons, resistors with 10k Ohms and cables are used to represent the hardware circuit of the proposed system. Over and above, heater and compressor are also used to heat and cold the water inside the tank of hot and cold water, respectively; together with pipes, pumps, and pads are utilized to develop the system properly. The proposed system is programmed with three differents modes, apart from auto and manual modes, where in the manual mode, the system can function as cold or heat pad manually as follows:

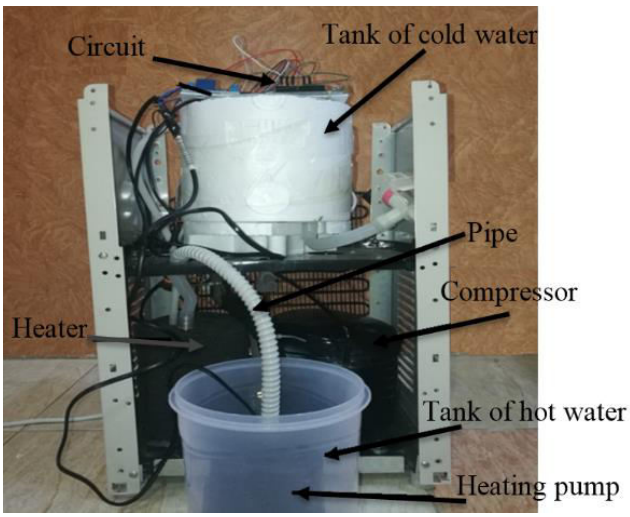

Figure-4. The final design without cover.

Figure-5. Image of the final design of the proposed system.

Auto system

In the auto mode, the auto system depends on patient's body temperature. The components of the auto system are auto push button, Arduino UNO, LCD, temperature sensor LM35, Relay (5 V), cooling pump, tank of cold water, compressor, pipes and pads. It works as in the following steps:

a) Turn on the auto button.
b) The sensor measures the temperature of human body.
c) The data of the body temperature is sent to the Arduino for analysis. It is commanded to function according to the received data (temperature):
A. If the temperature of the patient's body is more than 37ºC and temperature of the cold water inside the cooling tank between 0ºC and 5ºC, the relay will automatically turn on.
B. If the temperature is equal or less than 37 degrees or temperature of the cold water inside the cooling tank is not within the mentioned temperature range, the Arduino will give order to the sensor to send another data.
d) The temperature of the cold water inside the cooling tank then send the data to the Arduino
e) The relay passes the current to the pump.
f) The pump takes the water from cold tank by using compressor and sends it to the pad through the pipe, after that the water will go back to cold water tank.
g) This process will continue working for 10 minutes then it will be stopped for another 10 minutes, after that the process will start again.

Manual system

Manual system does not depend on body temperature of patient. In this case, the auto button must be OFF. The user either can choose to use the cold or hot system which depends on the treatment required. The components of the manual system in the cooling case are the same as the components used in auto system but without temperature sensor. Whereas, in the heating case, there are heaters, hot pump and hot water tank components.

Cooling system

a) Turn on the cold button.
b) The sensor measures the temperature of the cold water inside the cooling tank which must be within the desired value 0 ºC to 5 ºC, and then the relay will automatically turn on. If not, the Arduino will give order to the temperature sensor to send another measurement.
c) The relay passes the current to the pump.
d) The pump take water from cold tank by the compressor and move it into the pad through the pipe, then water back again to cool the water tank.
e) Continue this process for ten minutes then stops for ten minutes then restart from the beginning.

Heating system

a) Turn on the hot button.
b) The sensor measures the temperature of the hot water inside the heating tank which must be within the desired value 60ºC to 70ºC, and then the relay will automatically turn on. If not, the Arduino will give order to the temperature sensor to send another measurement.
c) The relay passes the current to the pump.
d) The pump take water from hot tank by the heater and move it to the pad across pipe, then water back again to hot water tank.
e) Continue this process for ten minutes then stops for ten minutes then restart from the beginning.

RESULTS AND DISCUSSIONS

The proposed design in this project is went through for some experiments to validate its effectiveness in terms of the principle of work, expected results, the extent of its safety, capability of work for long period of time and prove its advantages over the conventional Pads (Figure-6). The new method of the system design proved its effectiveness in time saving and able to be used anywhere. It generally can be used in the treatment of post-surgery, physiotherapy and as massage devices.

Figure-6. Traditional cold pad.

Table-1 shows the maximum, the minimum and the average temperature in Celsius degree values of the proposed system design for both hot and cold pads. Apparently, the maximum and the minimum cold temperature degree of the cold pad can be controlled by using the thermostat. Otherwise, the temperature degree of the hot pad can be controlled using the Arduino circuit through the connection of the hot water sensor to the water tank. The hot water inside the tank can be controlled to obtain the appropriate temperature degree for the hot therapy.

Table-1. Maximum, minimum and average temperature of electronic pad and traditional pad.

Type	Max	Min	Average
Electronic cold pad(C^o)	5	1	3
Electronic hot pad(C^o)	85	60	72.5
Traditional cold pad(C^o)	37	-5	16
Traditional hot pad(C^o)	60	40	50

A comparison between the traditional cold pad and electronic cold pad is shown in Figure-7. As can be seen from the Figure-7, measured results demonstrated that the proposed system has a stable temperature degree of the cold pad from of 1^oC to 5^oC.Compared to the traditional pads, the proposed system is better in terms of temperature degree stability.

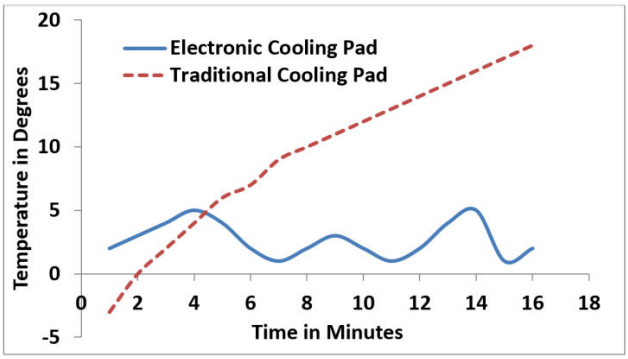

Figure-7. The results of the comparison between the traditional cold pad and electronic cold pad.

Figure-8 shows a comparison between the traditional hot pad and electronic hot pad. The measured results show that the proposed hot pad in this work has a stable hot temperature degree and does not lose its heat by the time, unlike traditional pads which lose its heat after a period of time of usage.

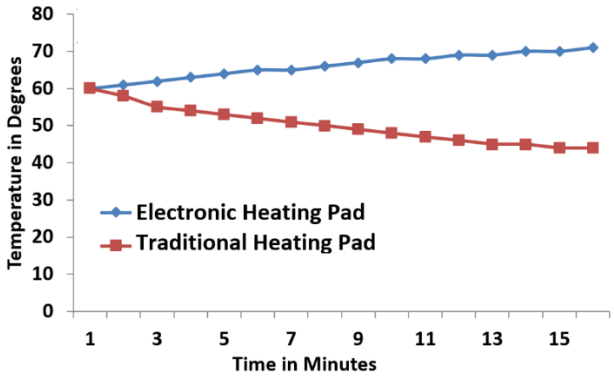

Figure-8. The results of the comparison between the traditional hot pad and electronic hot pad.

This section presented the design, validation, results and discussion of the proposed cooling and heating pad system. The experiment attested that the proposed system is effective and capable to be used in hot and cold therapy, at anytime and anywhere for various aims of physiotherapy with easy and flexible options of different usage modes. Also, it can replace different shapes of pads when used for different target areas of therapy such as eye pad, chest pad, limes pad, joints pad and etc. In comparison to the traditional pads, the proposed hot and cold pads are more stable in temperature degree and offer more convenient usage in physiotherapy.

As acknowledged by the field of physiotherapy, the duration of applying either the cold therapy or cold therapy must not exceed 20 minutes. Both of them need proper toweling procedure to prevent any temperature related injury that may be caused by direct contact. The patients must consult professional physiotherapist to follow gap after injury to use them, appropriate method(s), temperature, intervals, times per day, and duration of each application according to the particular injury especially for contrasting therapy, which combines both types. The best is to get a proper therapy applied by a professional physiotherapist him/herself who recognized the contraindications of each session he/she planned for his/her patient including who should not be treated with which therapy due to certain disease or special medical condition.

CONCLUSIONS

Summing up the entire work done throughout this project, it includes design of flexible and portable electronic cooling and heating pad system or hot and cold therapy with the sole aim of achieving overall performance improvement. The proposed system

presented in this work is a novel design of electronic cooling and heating pad using Arduino UNO, temperature sensor, heater and compressor. The measured results showed that the proposed system has very good cooling and heating pads with high efficiency and temperature degree stability compared to the traditional pads. Reason-wise, the proposed system is a more suitable choice of application in hospitals, stadiums, gyms and physiotherapy centers due to the benefits of portability, lower cost, temperature stability, ease of use, flexibility and simplicity of design. Moreover, it can be used on any part of human body. Furthermore, the proposed system is appropriate to be conveniently used as a contrasting therapy or hot-cold massage device too with expected good results. Also, it can be used for more than one patient simultaneously by adding more water pumps inside the cold and hot tanks.

REFERENCES

[1] D. M. Dana L. Davis, MPT, MTT; Reviewed by Mary Rodts, DNP and Graeme Keys, PT. Hot and Cold Therapies for Pain and Discomfort. Spine universe, 2016. [Online]. Available: https://www.spineuniverse.com/treatments/physical-therapy/hot-cold-therapies-pain-discomfort. [Accessed: 01-Apr-2017].

[2] Hot and Cold Therapy Explained. Physio Needs. 2014. [Online]. Available: https://physioneeds.biz/physio-blog/hot-cold-therapy-explained/. [Accessed: 02-Apr-2017].

[3] Heat Treatment. [Online]. Available: http://www.sportsinjuryclinic.net/treatments-therapies/heat-treatment. [Accessed: 05-Apr-2017].

[4] Give Swelling the Cold Shoulder. Leeds and Guiseley Physiotherapy Clinics.

[5] Hot and Cold Treatment for Sprains and Strains. pt Health. [Online]. Available: https://www.pthealth.ca/hot-and-cold-treatment-for-sprains-and-strains/. [Accessed: 02-Apr-2017].

[6] J. S. Al-Qahtani. 2017. Physiotherapy. 2010. [Online]. Available: http://www.alriyadh.com/555851. [Accessed: 22-Mar-2017].

[7] Cryotherapy. [Online]. Available: https://en.wikipedia.org/wiki/Cryotherapy. [Accessed: 01-Apr-2017].

[8] Cryokinetics. [Online]. Available: http://www.sportsinjuryclinic.net/treatments-therapies/cryotherapy-cold-therapy/cryokinetics. [Accessed: 23-Mar-2017].

[9] AirCast Cryo-Cuff. [Online]. Available: https://www.orthocanada.com/en/aircast-cryo-cuff. [Accessed: 25-Mar-2017].

[10] Cryostretching. [Online]. Available: http://www.sportsinjuryclinic.net/treatments-therapies/cryotherapy-cold-therapy/cryostretching. [Accessed: 01-Apr-2017].

[11] Cold Therapy or Cryotherapy. [Online]. Available: http://www.thephysiotherapysite.co.uk/physiotherapy/physiotherapists/articles/59/cold-therapy-or-cryotherapy. [Accessed: 01-Apr-2017].

[12] Cold Therapy P.R.I.C.E. Principles. [Online]. Available: http://www.sportsinjuryclinic.net/treatments-therapies/cryotherapy-cold-therapy/rice. [Accessed: 01-Apr-2017].

[13] Applying Cryotherapy. [Online]. Available: http://www.sportsinjuryclinic.net/treatments-therapies/cryotherapy-cold-therapy/applying-cryotherapy. [Accessed: 02-Apr-2017].

[14] Contrast Hydrotherapy. [Online]. Available: https://www.painscience.com/articles/contrasting.php. [Accessed: 29-Mar-2017].

[15] L. Brosseau *et al*. 2008. Transcutaneous electrical nerve stimulation (TENS) for the treatment of rheumatoid arthritis in the hand (Review). Cochrane Database Syst. Rev. 3: 1-18.

[16] J.-L. Salazar-Terrón, R. Martinez-Mendez, and G. Vazquez-Guzmán. 2015. System for Application of Contrast Therapy and Transcutaneous Electrical Nervous Stimulation for Pain Treatment. pp. 178-183.

[17] A. F. A. El-gawad. 2015. Suggested Temperature Monitoring System for Distribution Transformers by Using Microcontroller Scheme. 10(5): 2099-2104.

[18] M. Banzi and S. Edition. 2011. Getting Started with Arduino, Second Edi. O'Reilly Media, Inc.

[19] M. A. M. Azau, S. Jaafar, and M. Y. Saedon. 2015. Development of a portable solar-powered traffic light control system for a remote single lane bridge. ARPN J. Eng. Appl. Sci. 10(23): 17468-17471.

[20] M. M. Addi, S. A. Daud, N. A. A. Ghani, and F. K. C. Harun. 2015. Automatic phototherapy garment (APG) using blue LED for jaundice treatment - a preliminary design. ARPN J. Eng. Appl. Sci. 10(21): 9913-9918.

[21] LCD with Arduino. [Online]. Available: https://www.arduino.cc/en/Tutorial/HelloWorld. [Accessed: 12-Dec-2016].

[22] Arduino. [Online]. Available: https://www.arduino.cc/. [Accessed: 01-Dec-2016].