VOL. 13, NO. 1, JANUARY 2018 ISSN 1819-6608
ARPN Journal of Engineering and Applied Sciences

www.arpnjournals.com

EXTENSION OF DIRECT STRENGTH METHOD TO PERFORATED STIFFENED COLD-FORMED STEEL COLUMN AND TWO DIMENSIONAL FRAME.

P. W. Kubde and K. K. Sangle
Department of Structural Engineering, Veermata Jijabai Technological Institute (VJTI), Mumbai, India
E-Mail: pwkubde@st.vjti.ac.in

ABSTRACT

The use of cold-formed steel (CFS) structures is increasing due to the advances in manufacturing, construction technologies and relevant standards. CFS has many advantages. However the design of CFS structures is complex because of their thin walled open sections making them vulnerable to torsional-flexural buckling and local buckling. Direct strength method (DSM) is the method available for individual beam and column, with certain limitations. To overcome few such limitations this paper attempts to find some simplified formulae as an extension to DSM for stiffened perforated column and two dimensional frames. Already experimented column sections and frames were used for validation. Finite Element Method is used to analysis the column and frame for its load carrying capacity with various parameters. Based on FEM analysis simplified formulae are proposed as an extension to use of DSM for stiffened perforated columns and two dimensional frames.

Keywords: cold formed steel, distortional buckling, global buckling, direct strength method, finite element analysis.

1. INTRODUCTION

In India due to continuously increasing industrialization as well as heavy population, cold-formed steel structures like industrial storage rack structures and mass housing are the need of the hour, for which cold-formed steel frames can prove as very economical and efficient alternative. Column section with stiffeners can be the component of this frame to enhance its performance. Cold-formed steel has advantages of attractive appearance, fast construction, low maintenance, easy extension, lower long-term cost, non-shrinking and non-creeping at ambient temperatures, no requirement of formwork, termite-proof and rot proof nature , uniform quality, non combustibility.

1.1 Direct strength method-A brief

The development of the DSM started at the University of Sydney by research in to distortional buckling of rack post sections (columns) and was further developed for method of beams.(Schafer B. W., 2006). Further Hancock (Hancock *et al*, 1994) showed that compressive strength in a distortional failure correlated well with the slenderness in the elastic distortional mode.

Accurate member elastic stability is the fundamental to the DSM. The method is based on the idea that if all the three elastic instabilities viz , local, distortional and global buckling , along with load or moment causing yielding of the section can be found out , then the strength can be directly determined. The method uses column curves for global buckling with application to local and distortional buckling instabilities. The increased accuracy of the method occurs due to improvements in the local buckling prediction. The method also takes into consideration, deflection calculation (Serviceability). It is a reliable method, its reliability being established using limit state design format in use in the United States. (Schafer B. W., 2006)

Appendix 1 of the North American Specification for the design of CFS structural Members, 2004, supplement to the 2001also includes a number of tables that provide the geometrical and material bounds members which passed in the verification of the direct strength approach, in the process of codification of the same. Pre-qualified is the apt name that has been given to theses sections. Although this method is mainly due to Schafer B. W. (Schafer B. W., 2000), Moen C. along with Schafer B. W., took this method further by developing DSM equations that are applicable to CFS structural members with perforations (Moen C.D. and Schafer B. W., 2006; 2008; 2010; 2011) In 2006 Schafer B. W. came out with a guide “Direct Strength Design method guide”. (Schafer B. W., 2006).

1.2 Literature Review

A study on the flexural strength and deflections of discretely braced cold-formed steel C and Z sections was conducted at the University of Florida (Ellifrit D, 1991; Ellifrit D, 1992; Ellifrit D, 1997). In the research, typical C and Z sections were tested in flexure with various types of bracing. Researchers developed a finite element model for the nonlinear large-deflections and rotation analysis of beam-columns. (Pi YL, 1994; Pi YL, 1994). Researchers Performed lateral buckling tests on unbraced simply supported cold-formed lipped channel beams. A vertical load was applied at the shear centre of the section, or at a point below the shear centre. The beams were supported at the ends by connecting them to a steel block with two bolts at the web of the section (Bogdan M. Put, 1999; 1999).

In 2003, Narayanan, S. and Mahendran, Mahen studied the distortional buckling behaviour of a series of innovative cold formed steel columns by performing more than 15 laboratory experiments on innovative steel columns of intermediate length under axial compression to

find their ultimate load carrying capacity. They determined section and buckling properties of the columns using the finite strip analysis program THINWALL and further investigated the distortional buckling and nonlinear ultimate strength behaviour of the columns in detail using finite element analyses.

In another study, researchers (Yu C, 2003; Schafer B.W., 2006) studied the buckling behaviour of CFS channel beams. The buckling test was carried out on simply supported unbraced CFSs of two different cross sections. The lateral buckling test results showed that the CFS sections failed catastrophically by local & distortional buckling of most compressed elements of the cross section after quite large deformations. The results of 10 lateral buckling tests on simply supported CFCs of two different cross sections were presented & also compared with analytical design method as per AS 4100 (AS 4100 Australian Standard Steel Structures, 1981). It was found that the moments at failure were lower when the beam lateral defections increased the compression in the compression flange lip, and higher when they increased the compression in the flange-web junction.

Researchers (Put BM *et al*., 1998) performed a local buckling test on CFS C-sections and Z-sections during the test, bracing had been carefully considered in these tests to insure that distortional buckling and lateral-torsional buckling do not influence the interpretation of results. They concluded that the test results can be used for the evaluation of existing and proposed methods for strength prediction of webs in local buckling. In addition, these tests can form the basis for later evaluations in which restrictions on the distortional mode are relieved.

Researchers studied the flexibility of beam-to-column connectors used in thin walled cold-formed steel pallet racking systems (American Iron and Steel Institute, 1996). The attention is focused on beams subject to torque, because of the effect of transverse loads not applied at the shear centre (Bajoria, K.M. *et al*., 2006). A simple geometric nonlinear analysis method, based on satisfying equilibrium in the deformed configurations, is examined and used to predict the behavior of the beams. Simple geometric analyses, finite element analyses and finite strip analyses are performed and compared with experimental results. A new CFS section was manufactured and tested using newly proposed double cantilever method. Bajoria and Talicotti (Bajoria, K.M., 2006) proposed alternative beam to column test instead of the cantilever test. Complete studies involving both experimental and numerical investigations were performed to find out the flexibility of the beam-to-column connector, and this was followed by a full scale frame test to compare the results obtained. The double cantilever test takes into account the realistic behaviour of connectors, which are subjected to moment, shear and axial pull by the beams. This was confirmed by the results of the full-scale frame test.

Researchers studied the three dimensional (3D) model of conventional pallet racking systems using the finite element program ANSYS. They carried a free vibration modal analysis on conventional pallet racks with the 18 types of column sections developed along with semi-rigid connection. The stiffness of the connector was tested using the conventional cantilever method and also using a double cantilever method. The model is aimed at developing simplified equation for the fundamental period of storage racks in their down aisle direction. Finally parametric study was carried out to find out the fundamental mode shape and time period. Finite element method was used for the accuracy and appropriateness of cold-formed steel frame.

In 2011, K. K. Sangle performed the finite element buckling and dynamic analyses of two-dimensional (2D) single frames and three-dimensional (3D) frames of cold-formed sections with semirigid connections used in the conventional pallet racking system.(Bajoria, K.M. *et al*., 2011) The results of buckling analysis for the single 2D frames are compared with those from the experimental study and effective length approach given by RMI (RMI Specification for the design, testing and utilization of industrial storage racks, Rack Manufacturers Institute, 2008.)

The finite element model used for the single 2D plane frame is further extended to 3D frames with semirigid connections, for which the buckling analysis results are obtained. Thombare C.N. *et al*., 2016 studied nonlinear buckling analysis of 2D cold formed steel storage rack structure using appropriate commercial FE platform.

In 2014, P. W. Kubde and K. K. Sangle suggested modification formulae to DSM for determination of Load Carrying Capacity of Perforated Cold Formed Steel Column. In 2017, P.W.Kubde and K.K. Sangle researched modification formulae for determination of Load Carrying Capacity of two dimensional cold formed steel frames with inclined bracings.

Significant research is going on to simplify the design of CFS columns and frames to make it more reliable and practically acceptable. The addition of perforations and stiffeners serve lots of advantages for the practical purpose, but at the same time it generates complications in design. Considerable efforts are required to study the impact of holes and stiffeners on the strength of the member. The aim of the current research is to propose formulae which will help to find out load carrying capacity of CFS columns with perforations and stiffeners and two dimensional CFS frame with varying heights as an extension to the DSM equations.

In this paper, the FEA results are validated with available experimental data for a particular column section (Narayanan S. and Mahendran Mahen, 2003) and two dimensional CFS frames (Bajoria, K.M., 2011). The FEA results show good convergence with the experimental results. Hence, the study is extended to stiffeners provided in column and more heights of the frames with inclined and horizontal bracing frames. The results are then used to suggest extension formulae for modification in current DSM expression for stiffened columns and two dimensional frames.

2. RESEARCH DESIGN

The type of research is explorative and analytical. CFS Columns and Frames selected are as per availability and hence convenient sampling method is adopted. A sample size of 12 frames each one having different properties have been used for validation of FEA model, as experimental data was available for these frames, in study II. (Table-1). Same thing applies to all other tables; i.e. in every table every frame is having different properties.

3. ANALYTICAL STUDY - I: STUDY OF PERFORATED COLUMN SECTION WITH STIFFENERS

The section is selected from S. Narayanan *et al.* (2003), so that experimental results obtained could be used to verify FEM model used in this study. The same section was further studied by authors of this paper to suggest modification to DSM for slender columns of different heights and thickness along with perforations. Analytical study is carried out on this section by two methods viz. direct strength method and finite element method. Analysis is done through available software packages, CUFSM 4.05 for DSM which is freely available at http://www.ce.jhu.edu/bschafer/cufsm and appropriate commercial software for finite element method.

3.1 Finite element modelling

Finite element model of the above section was done using appropriate commercial finite element software package. It is a general purpose finite element modelling software for numerically solving a wide variety of mechanical problems. For the given model details are:

Element type: Three finite elements commonly employed in the elastic buckling analysis of thin walled structures are the S9R5, S4 and S4R elements as shown in Figure-1 the S4 and S4R finite elements are four node general purpose shell elements valid for both thick and thin shell problems. Both elements employ linear shape functions to interpolate deformation between nodes. S4R element has been used for meshing the model.

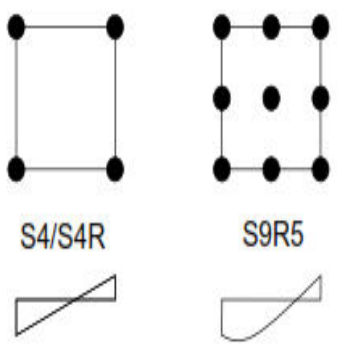

Figure-1. S4\S4R shell element and S9R5 shell element, FEM analysis.

.

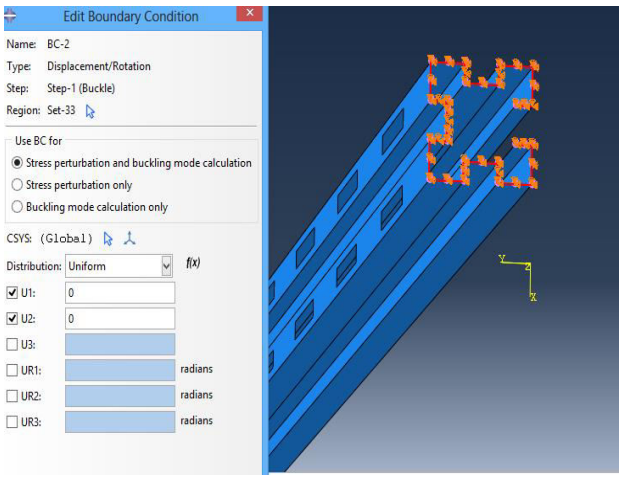

Figure-2. Boundary condition at end nodes.

Boundary conditions and loading: Boundary condition for the modelled column is pinned-pinned, free to wrap. End cross section nodes are restrained in X and Z direction and nodes at the centre are restrained in Y direction to prevent Rigid Body motion. A reference load of 1 kN is applied as a shell edge load over the perimeter of the column. Column has perforations at 140 cm c/c. Modulus of Elasticity is 212000 MPa and Poission's Ratio as 0.325.

Analysis: Liner Eigen buckling analysis was performed with appropriate FEA software. Eigen value obtained from the analysis is used to calculate the buckling capacity of the frame. The models were meshed with 30mm and 10mm mesh for convergence study. It was observed that the convergence was non-monotonic, hence to find more accurate eigenvalue, the models with 10mm mesh is used.

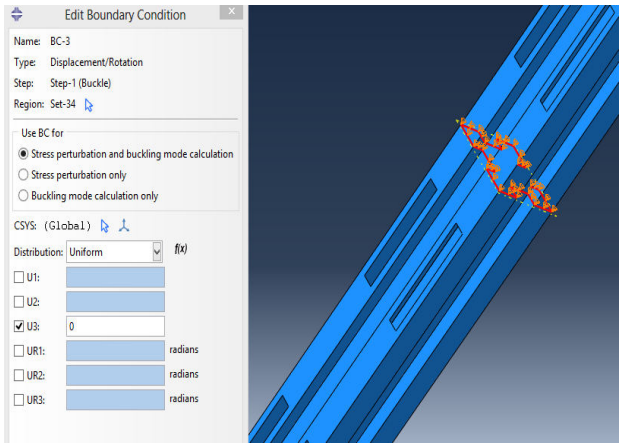

Figure-3. Boundary condition at mid height node.

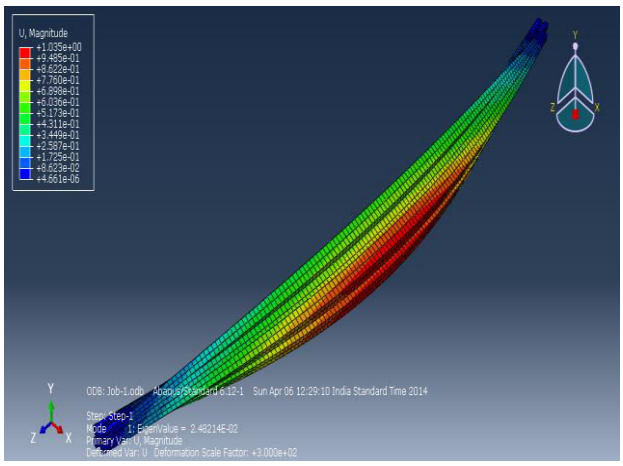

Figure-4. First mode shape of the model.

4. STRATEGY FOR EXTENDING DSM TO COLUMNS WITH PEFORATIONS.

Direct Strength Method can be extended to the columns with perforations by maintaining the assumption that elastic buckling properties of a cold-formed steel column can be used to predict strength. For a column with holes the elastic buckling loads Pcrl, Pcrd, Pcre are calculated including the influence of holes. In 2011, Moen C. D. proposed equations by keeping the same assumption and using the finite strip analysis as a part of AISI research program to extend DSM to columns with perforations. These are developed from classical buckling solutions for columns and plates with holes (Moen and Schafer 2009b; Moen and Schafer 2009a). Elastic buckling loads including the influence of holes are viable parameters for predicting capacity in a Direct Strength approach (Moen 2008).

However, when yielding controls strength, modifications to the existing DSM design expressions for columns without holes were needed. Engineering intuition tells us that column strength should be limited to the squash load of the column at the net section, Pynet =Anet x Fy, where A is the cross-sectional area at a hole. The net section strength limit has been confirmed in experiments (Ortiz-Colberg 1981; Sivakumaran 1987; Miller and Peköz 1994; Abdel-Rahman and Sivakumaran 1998) and is implemented in the DSM design expressions for columns with holes.

DSM gives formula for flexural buckling as;

$$\text{For, } \lambda_c \le 1.5;\ P_{ne} = \left(0.658^{\lambda_c^2}\right) P_y \quad (1)$$

$$\text{For, } \lambda_c 1.5;\ P_{ne} = \left(\frac{0.877}{\lambda_c^2}\right) P_y \quad (2)$$

$$\lambda_c = \sqrt{\frac{Py}{Pcre}}$$

$$Py = A_g F_y$$

4.1 Direct strength method

Finite strip modelling: For finite strip analysis CUFSM 4.06, a freely available program for elastic buckling analysis of thin walled sections is used. The geometry of the section is modelled by giving input as the coordinates of the nodes. Thickness is assigned to the nodes. To model the holes, spacing of the holes are adjusted and they are assigned zero thickness.

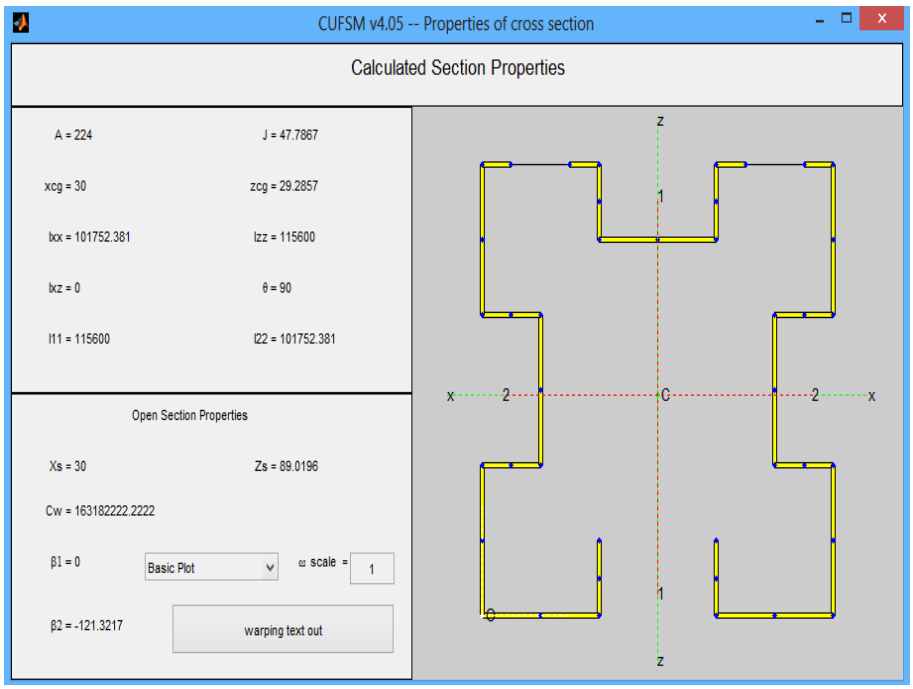

Figure-5. Section geometry of a proposed section.

Material Properties
The following material properties are assigned to the section.
Young's modulus = E = 212000 MPa
Shear Modulus = G= 80000 MPa
Poison's ratio = v = 0.325

Gross ad net section properties

The gross section and net section properties are calculated with the section property calculator in CUFSM. To determine the net section properties in CUFSM, it was required to assign a thickness of zero to the elements at the location of the perforations, instead of deleting them as it would not have worked.

To consider the effect of perforations the method suggested by C D Moen and B W Schafer (2011) was adopted and buckling capacity of section was found out.

5. PARAMETRIC STUDY

A series of parametric study was carried out for the given section. Four different lengths (2, 2.5, 3, 3.1 m) were considered. Each column length was stiffened with plates of depths 25, 50, 75 and 100mm with 1,2,3,4 and 5 in numbers. Every combination was modelled with appropriate commercial software for finite element method and CUFSM 4.06. (In CUFSM, without stiffeners)

6. ANALYSIS AND RESULTS (STUDY -I)

[A]. Table-1 shows load carrying capacity of columns of various lengths from 2 m to 3.1 m, stiffened with single 25 mm deep plate by FEM and DSM. Ratio of DSM to FEM values, R is calculated.

Table-1. Load carrying capacity of columns of various lengths stiffened with single 25 mm deep plate by DSM and FEM and their ratio R.

S. No.	Column Length, L (m)	Load carrying capacity (kN)		R
		DSM	FEM	
1	2	70.43	80.35	0.88
2	2.5	46.03	57.38	0.80
3	3	32.10	42.24	0.76
4	3.1	30.11	40.33	0.75

A graph of length of column verses R is plotted.

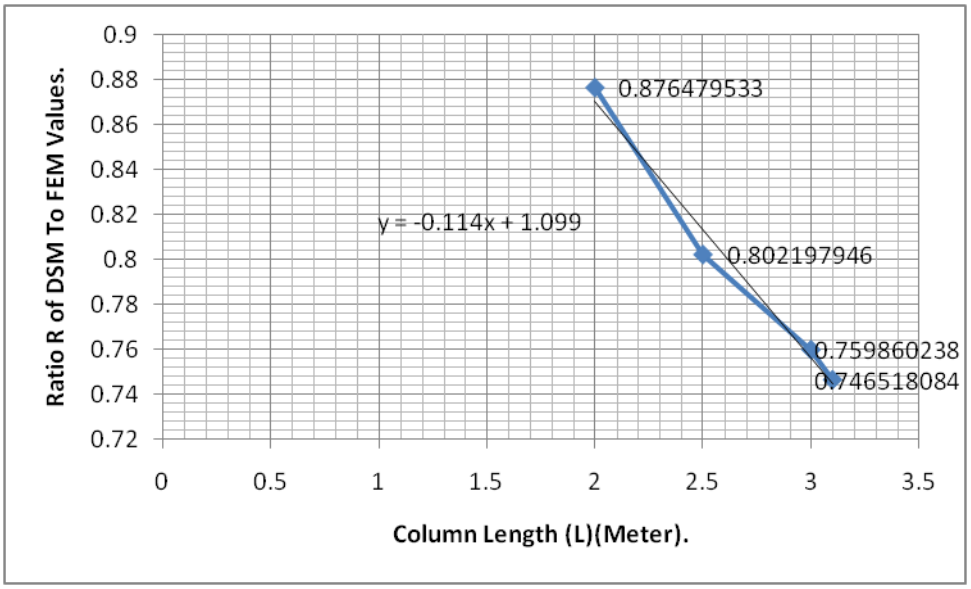

Figure-6. Graph of frame height (M) vs Ratio R of DSM to FEM values.

From the graph or the equation obtained from this graph, viz

$$R = -0.114L+1.099 \quad (3)$$

value R of for any intermediate lengths can be obtained. When this ratio R is multiplied by DSM value of that intermediate length column, the actual load carrying capacity is obtained.

Similar procedure is adopted for all other combinations and corresponding equations are obtained for ratio R as shown in Table-2 below.

Table-2. Equations for ratio R of DSM To FEM values.

S. No.	Depth of plate (mm)	No. of stiffeners				
		1	2	3	4	5
1	25	-0.114L+1.099	$0.097L^2$-0.596L+1.651	$0.055L^2$-0.384L+1.360	$0.0975L^2$-0.596L+1.651	$0.049L^2$-0.343L+1.229
2	50	$0.04L^2$-0.309L+1.291	$0.057L^2$-0.391L+1.366	$0.051L^2$-0.36L+1.366	$0.057L^2$-0.391L+1.366	$0.054L^2$-0.369L+1.229
3	75	$0.057L^2$-0.393L+1.371	-0.108L+1.003	$0.049L^2$-0.341L+1.21	-0.108L+1.003	$0.043L^2$-0.312L+1.146
4	100	$0.08L^2$-0.516L+1.508	-0.096L+0.946	$0.048L^2$-0.335L+1.187	-0.096L+0.946	$0.048L^2$-0.333L+1.159

[B]. Table-3 shows load carrying capacity of column 2m length stiffened with single plate of different depths. Ratio of DSM to FEM values, R is calculated.

Table-3. Load carrying capacity of 2m long columns stiffened with single plates of various depths.

S. No.	Stiffener plate depth, D (mm)	Load carrying capacity (kN)		R
		DSM	FEM	
1	25	70.43	80.35	0.88
2	50	70.43	84.47	0.83
3	75	70.43	86.43	0.81
4	100	70.43	88.27	0.80

A graph of plate depths verses R is plotted.

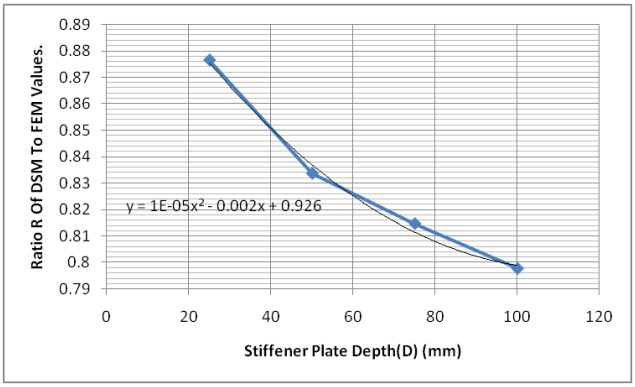

Figure-7. Graph of stiffner plate depth (mm) vs Ratio R of DSM to FEM values.

From the graph or the equation obtained from this graph, viz

$$R = 10^{-5} D^2 - 0.002D + 0.926 \quad (4)$$

Value of R for any intermediate plate depth can be obtained. When this ratio R is multiplied by DSM value of that intermediate depth, the actual load carrying capacity is obtained.

Similar procedure is followed for all other combinations and corresponding equations for R are obtained as shown in Table-4 below.

Table-4. Equations for ratio R of DSM to FEM values.

S. No.	Length of column (m)	No. of stiffeners				
		1	2	3	4	5
1	2	$10^{-5}D^2$-0.002D+0.926	-0.001D+0.873	$10^{-5}D^2$-0.003D+0.884	-0.001D+0.873	$10^{-6}D^2$-0.001D+0.775
2	2.5	-0.008D+0.827	$-6X10^{-6} D^2$ + 0.776	$10^{-5}D^2$-0.003D+0.809	$-6*10^{-6}D^2$ +0.776	$10^{-6}D^2$-0.001D+0.711
3	3	-0.008D+0.779	-0.001D+0.760	$10^{-5}D^2$-0.002D+0.768	-0.008D+0.760	$10^{-6}D^2$-0.001D+0.675
4	3.1	-0.008D+0.766	- 0.001D +0.765	$10^{-5}D^2$-0.002D+0.758	-0.001D+0.765	$10^{-6}D^2$-0.001D+0.0.667

7. CONCLUSION (Study I)

a) Applying the correction factor found in this paper to DSM formulae, load carrying capacity for the columns of different lengths with different stiffener depths and arrangements can be calculated instead of carrying out rigorous and tedious FEA

b) Lot of research is going on to simplify the design of Cold Formed Steel Sections to make it more reliable and practically acceptable. Addition of perforations and stiffeners serve lot of advantages for the practical purpose but at the same time it generates complications in design.

c) The above suggested modifications in the formula for intermediate column with perforations and stiffeners is just a small step towards this and more rigorous study for different sections with different boundary conditions, perforations, stiffeners is needed to be carried out to sharpen the available formulae and achieve more accuracy in predicting the buckling load carrying capacity of thin walled sections.

8. ANALYTICAL STUDY - II. Study of two dimensional cold formed steel frame with horizontal and inclined bracings

In this study, the finite FEA results are validated with available experimental data for a particular two dimensional CFS frame. (Bajoria, K.M. *et al*., 2011) with different thicknesses (shown in Figure-3). Same frames were then used for analytical study by two methods viz. DSM and FEM using software; for DSM, software - CUFSM version 4.05 which is freely available was used and for FEM , appropriate commercial software.

8.1 Finite element modelling

Element type, Boundary Conditions and Loading and Analysis are same as per 3.1.

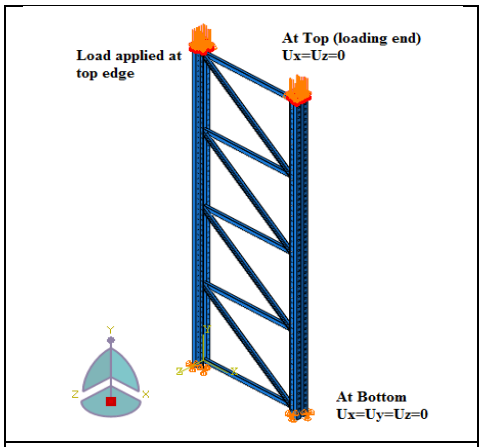

Figure-8. Boundary conditions used in FEA model.

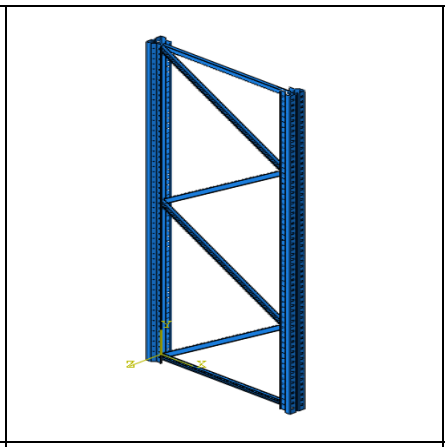

Figure-9(a). Bracing Type B1 (Inclined bracing only).

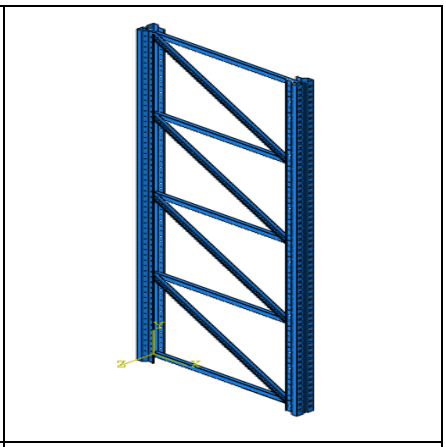

Figure-9(b). Bracing Type B2 (Horizontal and inclined bracing).

8.2 Extending DSM for frame

In this section, an attempt was made to solve an axially loaded frame using equations already avilable by (Schafer B.W., Moen C.D., 2010) and corresponding modifications was given. A frame is modelled in CUFSM v4.05 as shown in Figure-11. The bracing effect was not considered as CUFSM is applicable only for compression and flexural member analysis.

ARPN Journal of Engineering and Applied Sciences

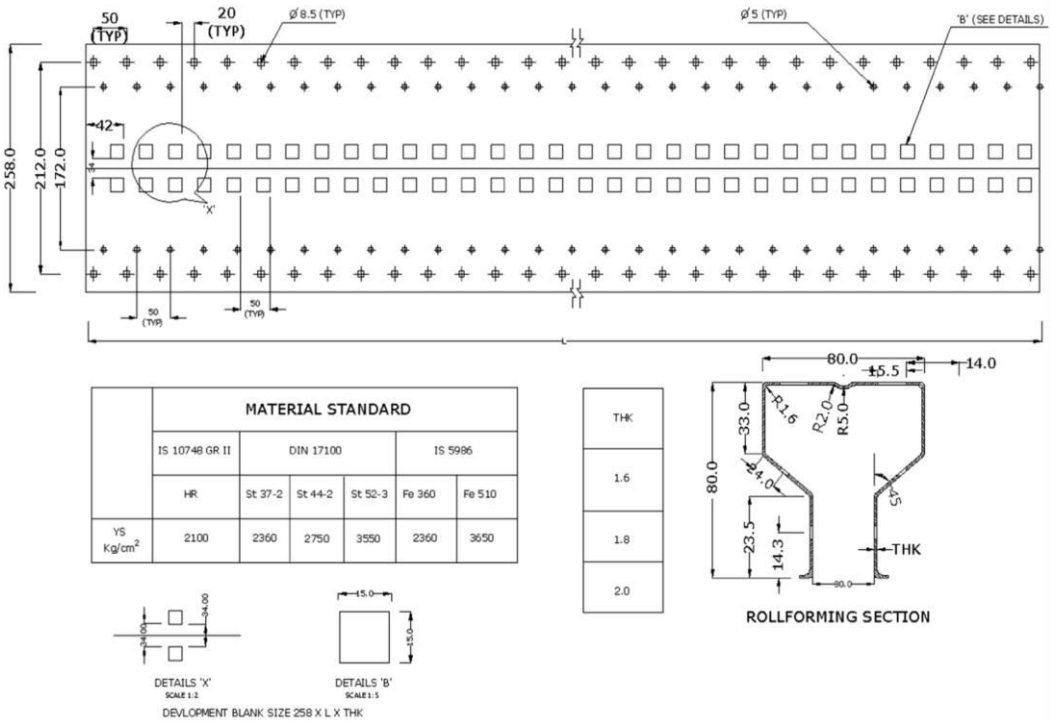

All dimensions are in mm.

Figure-10. Details of column cross section and column forming the frame. (Bajoria, K.M. *et al.*, 2011).

The following material properties were assigned to the section.

Yield Stress = 365 N/mm^2
Young's modulus = E = 212000 N/mm^2
Shear Modulus = G = 80000 N/mm^2
Poison's ratio = v = 0.325
Thickness = 1.6 mm throughout the section.

Two column sections were connected by elements with zero thickness as shown in Figure-11. The cross sectional properties are found by the 'section properties option' of the software as shown. The load applied is 1000 N on the cross section and to generate a frame effect, connecting zero elements were deleted as shown (Figure-11). Similarly for net cross sectional properties, zero element thickness were assigned to hole region. Again load of 1000 N was applied and zero elements were deleted as shown. Before analysis the net cross section of frame, the corner nodes of member were restrained in Z-direction (Schafer B.W., Moen C.D., 2010). The column section of frame is having 2 no's of holes on the web and 4 no's of holes on flange. Thus, while the calculations of perforations in frame total 4no.s of holes were assumed in the evaluation of strength.

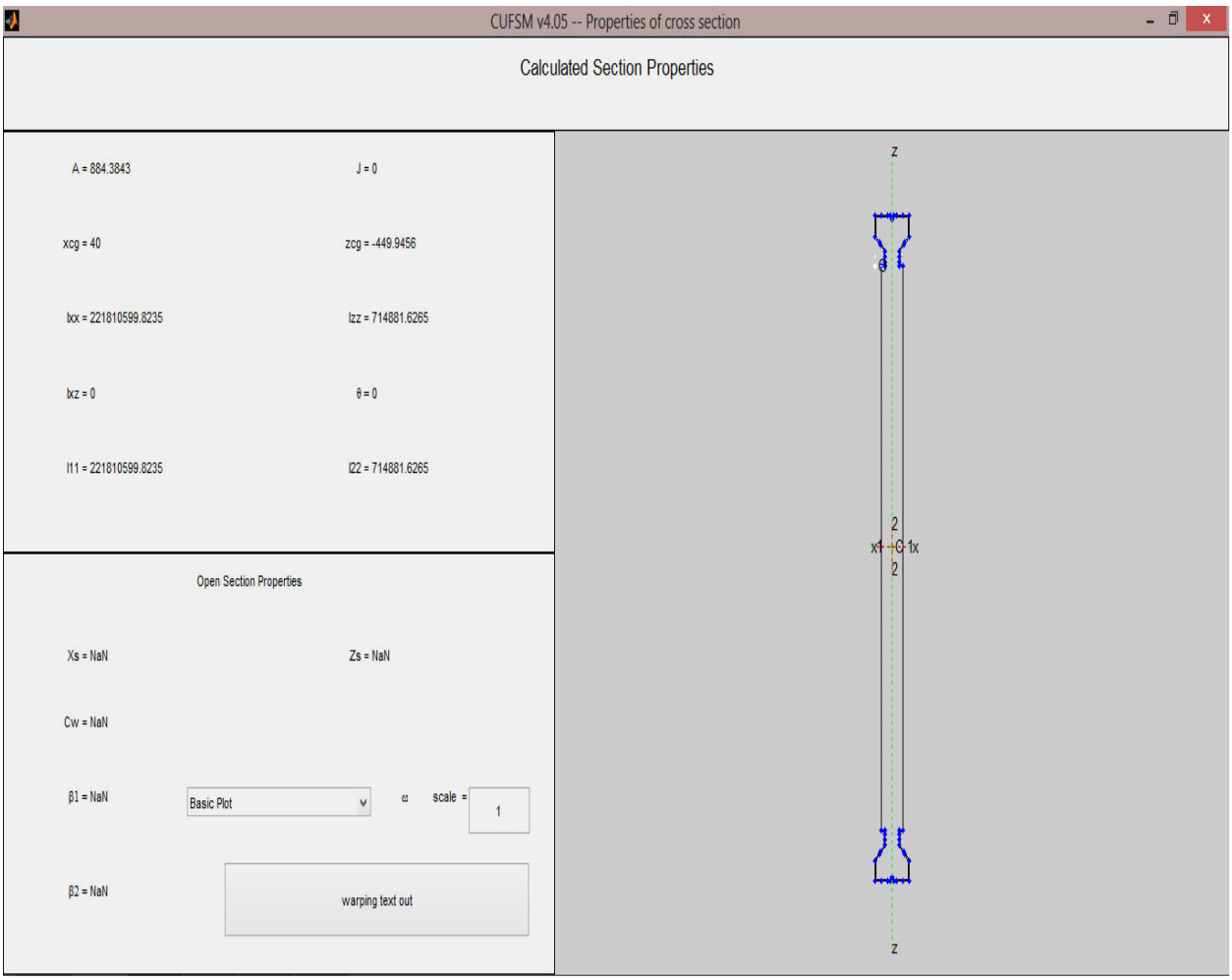

Figure-11. Finite strip model of frame MW1.6 in CUFSM version 4.05.

9. RESULTS (Study-II)

In Table-5, experimental results already obtained by earlier researchers for various frames and FEM results obtained for the same frames are tabulated.

{Meaning of Nomenclature in Column 1of Table-5: For example: MW-1.6-B1 is Column frame Name: where MW means medium weight (HW means heavy weight), 1.6 mm is thickness, B1 is the bracing type as shown in figure 2a ,(B2 is other bracing type as shown in Figure-2b.)}

Table-5. Validation of model: Experimental and FEA results.

Experimental study 1: without spacer bars (3.1 m height frame)				
Frame	**Pe (experimental) kN**	**Pe** (FEM) **kN**	**% error**	**Pe** (FEM) **/ Pe (experimental)**
MW-1.6-B1	103.51	112.04	-8.24	1.08
MW-1.6-B2	115.45	125.00	-8.27	1.08
MW-1.8-B1	166.78	151.15	9.37	0.91
MW-1.8-B2	176.88	160.74	9.12	0.91
MW-2.0-B1	200.41	182.29	9.04	0.91
MW-2.0-B2	215.46	196.81	8.66	0.91
HW-2.0-B1	223.45	236.20	-5.71	1.06
HW-2.0-B2	235.26	269.00	-14.34	1.14
HW-2.25-B1	264.24	268.65	-1.67	1.02
HW-2.25-B2	275.56	304.40	-10.47	1.10
HW-2.5-B1	295.46	301.63	-2.09	1.02
HW-2.5-B2	305.56	340.12	-11.31	1.11
Average ratio				1.11
Coefficient of variation				11.08

In the following Tables 6, 7 and 8, FEM and DSM results for the same model validated in Table-5 {only for frame type B2, as results for frame type B1 have already been published (P.W. Kubde, K.K. Sangle, 2017.)} but with three different heights. (Table-6: height 3.1 m, Table 7: Height 4.6m and Table-8: height 6.1m) are presented. As the FEM model is already validated, the FEM values for frames of other heights with holes are considered to be correct and are compared with corresponding DSM values with holes to find out required appropriate formula / factor which when used along with DSM value will give correct value i.e. same value as is given by FEM.

Table-6. Critical buckling strength for frames of height 3.1m.

3.1 m Frame height, Frame type B2				
Column frame	**Pe** (FEM) **kN**	**Pe** (DSM) **kN with hole**	**% error**	**Ratio of DSM to FEM**
MW-1.6	112.04	94.71	24.23	0.76
MW-1.8	151.15	106.55	33.71	0.66
MW-2.0	182.29	118.39	39.85	0.60
HW-2.0	236.20	228.32	15.12	0.85
HW-2.25	268.65	262.89	13.64	0.86
Average ratio				0.81
Coefficient of variation				16.98

Table-7. Critical buckling strength for frames of height 4.6m.

4.6 m Frame height, Frame type B2				
Column Frame	**Pe** (FEM) **kN**	**Pe** (DSM) **kN With Hole**	**% error**	**Ratio of DSM to FEM**
MW-1.6	88.66	42.98	51.52	0.48
MW-1.8	99.56	48.35	51.44	0.49
MW-2.0	110.38	53.72	51.33	0.49
HW-2.0	194.04	122.42	36.91	0.63
HW-2.25	236.21	141.21	40.22	0.60
HW-2.5	215.21	153.03	28.89	0.71
Average Ratio				0.57
Coefficient Of Variation.				15.40

Table-8. Critical buckling strength for frames of height 6.2m.

6.2 m Frame height, Frame type B2				
Column Frame	**Pe** (FEM) **kN**	**Pe** (DSM) **kN With Hole**	**% error**	**Ratio of DSM to FEM**
MW-1.6	88.66	23.72	61.73	0.38
MW-1.8	99.56	26.67	61.60	0.38
MW-2.0	110.38	29.63	61.47	0.39
HW-2.0	194.04	67.56	56.30	0.44
HW-2.25	236.21	77.93	54.68	0.45
HW-2.5	215.21	84.45	55.35	0.45
Average Ratio				0.41
Coefficient Of Variation.				8.19

From Tables 6, 7 and 8, it is observed that ratio of DSM with hole to FEM shows less variation for same height of the frame. The average of these ratios, say R has been plotted against the height of corresponding frame (Refer Figure-12).

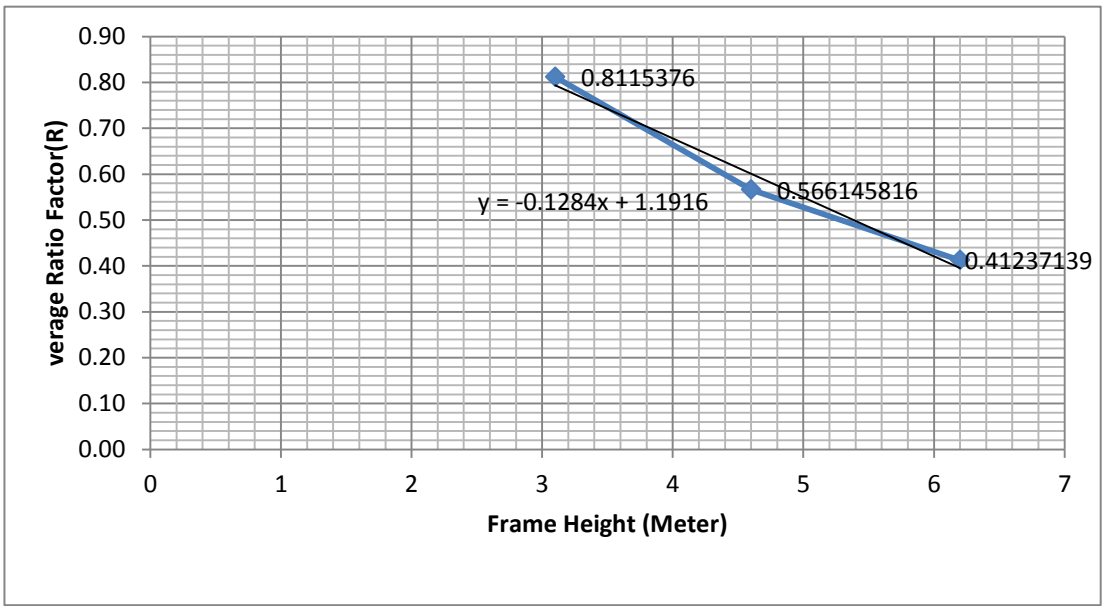

Figure-12. Graph of frame height vs. Average ratio factor.

From above graph presented in Figure-12, following equation is obtained for frame with bracing type B2,

$$R = -0.1281 \times \text{Frame Height} + 1.1911 \quad (5)$$

Where R is the Avg. ratio factor i.e. ratio of strength by FEM to the strength by DSM with hole. Using this ratio and strength of frame calculated by DSM with hole, we can find out the critical buckling strength for any height of the frame with bracing type B2.

Table-5 represents FEM values and values from DSM with modification factor for frames with bracing type B2, which makes it clear that factor R obtained from equation (5) when applied to DSM value, modifies that value bringing it close to the FEM value.

Table-9 represents FEM values and values from DSM with multiplication factor for frames with bracing type B2, which makes it clear that multiplication factor obtained from equation (5) for bracing type B2 when applied to DSM value, modifies that value bringing it close to the FEM value.

Table-9. Comparison of DSM results with FEM for frame with bracing B2.

Frame height (m)	**Frame type**	**Strength using FEM for B2 type frame**	**Strength using DSM equation** (kN)	**Strength by developed DSM equation** (kN)	**% error with DSM equation**	**% error with developed DSM equation**
3.1	MW-1.6	125.00	94.71	119.25	24.23	4.60
3.1	MW-1.8	160.74	106.55	134.16	33.71	16.54
3.1	MW-2.0	196.81	118.39	149.07	39.85	24.26
3.1	HW-2.0	269.00	228.32	287.48	15.12	-6.87
3.1	HW-2.25	304.40	262.89	331.01	13.64	-8.74
3.1	HW-2.5	340.12	285.40	359.35	16.09	-5.65
4.6	MW-1.6	88.66	42.98	71.37	51.52	19.50
4.6	MW-1.8	99.56	48.35	80.29	51.44	19.35
4.6	MW-2.0	110.38	53.72	89.21	51.33	19.18
4.6	HW-2.0	194.04	122.42	203.29	36.91	-4.77
4.6	HW-2.25	236.21	141.21	234.49	40.22	0.73
4.6	HW-2.5	215.21	153.03	254.11	28.89	-18.08
6.2	MW-1.6	61.94	23.71	59.66	61.73	3.69
6.2	MW-1.8	69.45	26.67	67.11	61.60	3.37
6.2	MW-2.0	76.92	29.634	74.57	61.47	3.06
6.2	HW-2.0	154.61	67.56	170.01	56.30	-9.96
6.2	HW-2.25	171.96	77.93	196.10	54.68	-14.04
6.2	HW-2.5	189.13	84.45	212.51	55.35	-12.36
Average Ratios						1.88
Coefficient Of Variation.						678.81

By using the respective multiplication factors R, the buckling strength for few more heights has been calculated and shown in Table-10, for both type of bracings B1 and B2{Unlike frame type B2(Tables 6 to8), detailed results and analysis for frame type B1 are not presented in this paper, as they are already published (P.W.Kubde, K.K. Sangle, 2017.)}.

Table-10. Buckling Strength of frames for few more heights.

Frame type	**Frame height** (m)	**Strength using DSM equations** (kN)	**Strength by developed equation for frame** (kN) **(with bracing type B2)**
MW-1.6	3.8	63	89.41
MW-1.8	3.8	70.87	100.58
MW-2.0	3.8	78.75	111.77
HW-2.0	3.8	175.27	248.75
HW-2.25	3.8	202.01	286.70
HW-2.5	3.8	219.09	310.94
MW-1.6	5.3	32.36	63.13
MW-1.8	5.3	36.41	71.03
MW-2.0	5.3	40.46	78.93
HW-2.0	5.3	92.19	179.85
HW-2.25	5.3	106.34	207.45
HW-2.5	5.3	115.24	224.81
MW-1.6	6.8	19.65	61.29
MW-1.8	6.8	22.11	68.96
MW-2.0	6.8	24.57	76.64
HW-2.0	6.8	55.98	174.61
HW-2.25	6.8	64.57	201.40
HW-2.5	6.8	69.87	217.94

10. CONCLUSIONS (Study II)

a) Main objective of the research was to verify whether the DSM developed by Moen is applicable to two dimensional CFS frames or not, and if not, then to suggest appropriate modification in existing DSM. Hence two dimensional CFS frames studied by K. M. Bajoria, K. K. Sangle and R. S. Talicotti, 2011, at IITB ,Mumbai were used for validation of FEA model . Load carrying capacities of the same model with same height as well as with few different heights were then calculated using FEM software, as well as DSM formulae (software Cufsum). All these FEM and DSM values tabulated in tables 6, 7, 8 were then graphically analysed (Figure-12) to obtain a multiplication factor R equation (5). This multiplication factor, researched in this paper, which when applied to DSM value obtained for the frame of any height, gives correct load carrying capacity (FEM value) of that frame with an accuracy of +/- 20%. (Table 9 and 10).

b) Applying the correction factor found in this paper to DSM formulae, load carrying capacity for the frame of any height can be calculated instead of carrying out rigorous and tedious FEA.

REFERENCES

Bajoria K.M. and Talikoti R.S. 2006. Determination of fexibility of beam-to-column connectors used in thin walled cold-formed steel pallet racking systems. Journal of Thin-Walled Structures. 44: 372-380.

Bajoria K.M. Sangle K.K. and Talikoti R.S. 2011. Stability and Dynamic Analysis of Cold-Formed Storage Rack Structures with Semirigid Connections. Journal of Thin-Walled Structures. 44: 372-380.

Bogdan M. Put, Yong-Lin Pi, N. S. Trahair, Member, ASCE. 1999. Lateral Buckling Tests on Cold-Formed Channel Beams. J. Struct. Eng. 1999.125:532-539.

Bogdan M. Put, Yong-Lin Pi, N. S. Trahair, Member, ASCE. 1999. Bending and Torsion of Cold-Formed Channel Beams. J. Struct. Eng.125:504-546.

Ellifrit D, Sputo T, Haynes J. 1991. Flexural strength and deflections of discretely braced cold formed steel channel and zee sections. Project report, American Iron and Steel Institute.

Ellifrit D et al. 1992. Flexural capacity of discretely braced C's and Z's. In: Yu W-W, LaBoube RA, editors. Proceedings of the Eleventh International Specialty

Conference on Cold-Formed Steel Structures. St Louis, MO: Department of Civil Engineering, University of Missouri - Rolla, 108-29.

Ellifrit D, Glover B, Hren J. 1997. Distortional buckling of channels and zees not attached to sheathing. Report for the American Iron and Steel Institute.

Moen, C. D. 2008. Direct Strength Design for Cold-Formed Steel Members with Perforations. Ph.D. Thesis, Johns Hopkins University, Baltimore.

Moen, C.D., and Schafer B.W. 2011. Direct strength design method for design of cold formed column with holes. Journal of Structural Engineering. 137(5), May 1, 2011 ©ASCE.

Pi YL, Trahair N.S. 1994. Nonlinear inelastic analysis of steel beam-columns. I: Theory. Journal of Structural Engineering, 120(7): 2041-61; ASCE.

Pi YL, Trahair N.S. 1994 Nonlinear inelastic analysis of steel beam-columns. II: Applications. Journal of Structural Engineering, ASC; 120(7): 2062-85; ASCE.

Put BM, Pi Y-L, Trahair N.S. 1998. Lateral buckling tests on cold-formed channel beams. Research report no. R767, Center for Advanced Structural Engineering, Department of Civil Engineering, the University of Sydney, Australia.

Schafer, B.W. February 2006. Direct Strength Method Design Guide. American Iron and Steel Institute, Washington, D.C. p. 171.

Schafer BW, Moen C.D. November 2010. Extending Direct Design to Cold Formed Steel Beams with Holes. Twentieth International Specialty Conference on Cold-Formed Steel Structures St. Louis, Missouri, USA.

Schafer B.W. 2006. Review: The Direct Strength Method of Cold Formed Steel Member. Stability and Ductility of Steel Structures. Lisbon, Portugal.

Thombare C.N., Sangle K. K. And Mohitkar V.M. 2016. Nonlinear buckling analysis of 2D cold formed storage simple cross aisle frames: Journal of building Engineering. 7: 12-22.

Yu C, Schafer B.W. 2003. Local buckling tests on cold-formed steel beams. Journal of Structural Engineering; 129(12): 1596-606.

Narayanan, S. and Mahendran, Mahen. 2003. Ultimate Capacity of Innovative Cold formed Steel Columns. Journal of Constructional Steel Research. 59(4): 489-508.

P.W.Kubde and K.K. Sangle. 2017. Extension of direct strength method to two dimensional cold formed steel frame. Revista ALCONPAT. 7(2).

P.W. Kubde and K.K. Sangle. 2014. Determination of Load Carrying Capacity of Perforated Cold Formed Steel Column using Direct Strength Method, Proceedings of the ICTWS 2014 7th International Conference on Thin-Walled Structures, ICTWS2014,28 September - 2 October, Busan, Korea.