VOL. 13, NO. 1, JANUARY 2018 ISSN 1819-6608
ARPN Journal of Engineering and Applied Sciences

www.arpnjournals.com

INFLUENCE OF PARAMETERS OF ELECTRICAL DISCHARGE MACHINING ON ACCURACY OF MANUFACTURING OF SMALL-SIZED PRODUCTS

Timur Rizovich Ablyaz[1], Karim Ravilevich Muratov[1] and Sarabjeet Singh Sidhu[2]
[1]Perm National Research Polytechic University, Perm, Komsomolsky Av., Russia
[2]Beant College of Engineering & Technology, Gurdaspur, Punjab, India
E-Mail: ablyaz.t@mail.ru

ABSTRACT

The presented study discusses the issues of wire-cut electrical discharge machining of small-sized products of complicated configuration made from tungsten. The wide-spread use of tungsten and its alloys is related to the fact that it satisfies the requirements for parts operating under extremely high temperatures. The part "Slot mask" was chosen as an experimental specimen. The technological application of this part is the measurement of the distribution of power along a section of an electron beam, which is used in electron-beam machining of materials. The aim of the presented study is the analysis of the influence of regimes of electrical discharge machining on the process of machining of small-sized products made from tungsten. In order to achieve the set goal, the mathematical and experimental study of electrical discharge machining was carried out. During the mathematical simulation, the spark gap value was taken into account. The experimental study was carried out using the wire-cut electrical discharge machine tool Electronica Eco Cut with various cutting regimes. The brass wire with a diameter of 0.25 mm was chosen as an electrode-tool during the experiment. The working media is distilled water. During the modeling, we considered the nature of the process of electrical discharge machining, which is the transformation of the electric energy of a sparkle charge taking place between the electrode-part and the electrode-tool, into thermal energy, which destroys part of the material. The obtained mathematical model was confirmed by the experimental results. In the study, it was established that the increasing power in the spark gap leads to an increase in the intensity of the removal of material, and, therefore, an increase in the speed of cutting. In the cutting zone there was intense evaporation and melting of metal under the action of non-stationary heat flux coming from heat sources, which have small sizes and small action time and which appear on electrodes under pulse charge. In the study, it was demonstrated that a decrease in the speed of cutting leads to the concentration of large thermal energy on a machined part and an increasing possibility of secondary spark charges, and, thus, increasing cut width. It was established that due to a higher speed it is possible to make thinner cuts. The technological regimes, which allow providing the designated precision parameters during production of the part "Slot mask", were established.

Keywords: small-sized products, slot mask, electrical discharge, machining.

1. INTRODUCTION

Wire-cut electrical discharge machining (WCEDM) is widely used in production of small-sized parts of complicated configuration for instrument making industry, such as linear movement transducers with the designated resolution, slot masks, etc.

In the case of use of WCEDM, molybdenum or brass wire with a diameter from 0.02 to 0.3 mm is used as an electrode-tool, which allows to machine small-sized parts [1-6].

In the study [1], it was demonstrated that during production of parts of this kind using WCEDM, one of the most important parameters is the cut width, which is formed by an electrode-tool. Figure-1 shows the scheme of the formation of the cut width during WCEDM.

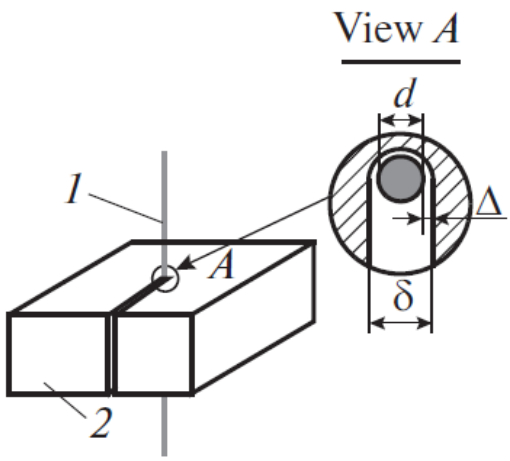

Figure-1. Formation of the cut width δ: (1) wire electrode; (2) part; d, wire diameter; Δ, spark gap.

As it is shown in Figure-1, the cut width is the sum of the diameter of a wire electrode (WE) and a spark gap. From the analysis of the studies [1-3], it was established that the formation of the cut width is

influenced by the following factors: the parameters of the technological regimes, the properties of the working liquid and the machined material. The value of the cut width during the WCEDM is the main factor influencing the precision of machining.

Because most products of instrument production industry operate under load and in conditions of increased temperature, the material of workpieces is selected especially carefully. Tungsten and its alloys are widely used in instrument making industry.

Tungsten is used in modern equipment both as pure metal and as part of alloys, among the most important of which are alloyed steels, tungsten-carbide alloys with high hardness and wear-resistant and heat-resistant alloys [7].

The wide-spread use of tungsten and its alloys is related to the fact that it satisfies the requirements for parts operating under extremely high temperatures. This metal has a very high boiling point (5900 °C) and quite low speed of evaporation, even at temperature of 2000 °C. The conductivity of tungsten is almost three times lower than conductivity of copper. However, the high density, tendency to become brittle at low temperatures and low resistance to oxidation at not high temperatures limit the applicability of tungsten. One of the reasons of brittleness of tungsten is blocking of dislocations by interstitial impurities [3, 5].

Tungsten has increased electroerosive resistance, which complicates the selection of the machining regimes for WCEDM required for the designated precision.

The purpose of the presented study is the analysis of the influence of regimes of WCEDM on the process of machining of small-sized products made from tungsten.

2. MATERIALS AND METHODOLOGY

The study discusses the process of production of the part "Slot mask". The technological application of this part is the measurement of distribution of power along a section of an electron beam, which is used in electron-beam machining of materials.

The workpiece material is the tungsten plate VA of 3 mm thickness made according to the technical specifications TU 48-19-106-91.

The overview of the machined workpiece is presented in Figure-2.

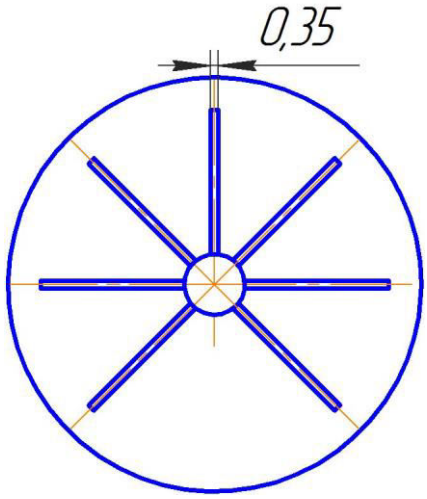

Figure-2. Overview of the part "Slot mask".

The major technological challenge during the manufacturing of the part is the machining of slots. As EDM is the non-contact cutting method, during the design of the technology of production of an acceptable workpiece it is necessary to take into account the spark gap, the size of an electrode-tool and make correction to the control program. The adequately selected correction allows providing the designed precision of machining.

The study presents a mathematical and experimental study of the machining process.

During the mathematical simulation, the spark gap value was taken into account.

The experimental study was carried out using WCEDM machine tool Electronica EcoCut. The machining regimes are presented in Table-1, where t_{on}- pulse turning on time (µs), t_{off} – pulse turning off time (µs), U - average voltage (V).

The brass wire of 0.25 mm diameter was chosen as an electrode-tool. The working medium is distilled water.

Table-1. Technological regimes of EDM.

No. of technological regime	1	2	3	4	5
t_{on}, µs	21	30	21	1	21
t_{off}, µs	60	51	50	10	40
on-off time ratio q	3.86	2.7	3.38	11	2.9
U, V	50	50	50	50	50

During the experiment, the machine tool instruments recorded the value of current I (A) and the speed of cutting of $V_{cutting}$(mm/min).

The study of the width of cut δ_{cut} (mm) was carried out using Olympus GX51 microscope with 100x magnification.

3. SIMULATION OF THE SPARK GAP

During the calculation of the value of the spark gap (Δ), it is necessary to consider the physical nature of the process of electrical discharge machining, which is the transformation of the electric energy of a sparkle charge taking place between the electrode-part and the electrode-tool, into thermal energy, which destroys a part of the material. The amount of mass of material removed from the surface during one working pulse is defined by the mass removal rate (MRR), which is calculated using the following formula [3, 8-15]:

$$MRR = \frac{m}{t_{on}}, \quad (1)$$

where m – mass (kg); t_{on}- time of action of the pulse (s).

From the practice of operation of EDM equipment, it is known that MRR seriously depends on linear machining speed Q_l (m/s) and spark gap Δ (m), the properties of the machined material and the height of machining h (m) [3,8-15].

Thus, MRR can be calculated as follows:

$$MRR = 2 \cdot (R + \Delta) \cdot h \cdot \rho \cdot Q_l(q, h), \quad (2)$$

where Δ- spark gap (m); h - height of the assembled package (m); ρ- density of the processed material (kg/m^3); Q_l(q,h) - linear machining speed, which depends on on-off time ratio of pulses (m/s); R - radius of WE (m).

For the calculation of the spark gap, it is assumed that all energy emitted during the breakdown of the spark gap, according to the law of conservation of energy, completely converts into thermal energy, which, in turn, is used for heating, melting and evaporation of the metal of electrodes, as well as for heating and evaporation of the working liquid and formation of the gas bubble.

Pulse energy W_p(J), which is emitted in the spark gap and distributed between WE and the electrode-tool (ET), removes metal from a processed workpiece [3-6]. Pulse energy is calculated using the following equation:

$$W_p = \int_0^{t_p} U \cdot I \cdot dt_{on}, \quad (3)$$

where U - voltage at electrodes, (V); I - current, (A); t_{on}- pulse turning on time, (s).

At constant values of U, I, t_{on}, the equation (3) can be written as follows:

$$W_p = U \cdot I \cdot t_{on}, \quad (4)$$

As in the process of EDM the stability of spark charge is influenced by various factors, the correcting coefficient, which considers the amount of efficient use of pulse energy η_p, must be added to the equation (4). This coefficient is calculated using the following equation:

$$\eta_p = (1 - K_1) \cdot (1 - K_2) \cdot (1 - K_3), \quad (5)$$

where K_1- coefficient, which considers the losses of energy for heating and evaporation of the working liquid; K_2- coefficient, which considers the losses of energy for heating the electrode-tool; K_3- coefficient, which considers the losses of energy in the sparking gap.

For melting of mass of a material, a certain amount of heat Q (J) must be transferred to the surface of ET. The heat, which is necessary for heating, melting and evaporation of a unit of mass of a substance, is calculated as follows:

$$Q = m(c_h \Delta T_m + \lambda_m + c_l \Delta T_l + r), \quad (6)$$

where c_h- specific thermal capacity of hard metal (J/kg·K); c_l- specific thermal capacity of liquid metal (J/kg·K); m - mass of a material (kg); ΔT- difference of initial and final temperatures for each of stages of heating (K); λ_m- specific heat of melting of metal (J/kg); r – specific heat of vaporization of metal (J/kg).

Specifying K = $(c_h \Delta T_m + \lambda_m + c_l \Delta T_l + r)$, then after transforming, the equation for calculation of MRR will become as follows:

$$MRR = \frac{Q \cdot \eta_p \cdot U \cdot I}{K \cdot W_p} = \frac{\eta_p \cdot U \cdot I}{K}, \quad (7)$$

Equating the expressions (2) and (7) allows calculating the spark gap:

$$= \frac{\eta_p \cdot U \cdot I}{K \cdot 2 \cdot h \cdot \rho \cdot Q_l(q,h)} - R, \quad (8)$$

From the analysis of the equation (8) it can be concluded that Δ depends on the physical properties of processed material, the height of a processed part and regimes of cutting. It was demonstrated that increase of the gap is influenced by current and voltage in the gap. For the calculation of the cut width (δ), the diameter of the wire (d) must be taken into account.

4. EXPERIMENTAL RESULTS AND DISCUSSIONS

For obtaining the relationships between the pulse parameters of technological regimes and the value of the width of cut for each regime, the value of average power (P_{av} = I·U), which is emitted to the spark gap, is calculated.

The experiment results, as well as the values calculated using the equation 8, are presented in Table-2.

Table 2. Results of the study.

No. oftechnological regime	$P_{av}V \cdot A$	I, A	$\delta_{1\ (experimental)}$, mm	$\delta_{2(calculated)}$, mm
1	75	1.5	0.378	0.378
2	125	2.5	0.351	0.351
3	100	2	0.325	0.325
4	25	0.5	0.411	0.411
5	140	2.8	0.334	0.334

On the basis of Table-2, the graphs of the relationships between power and the cut width are plotted (Figure-3).

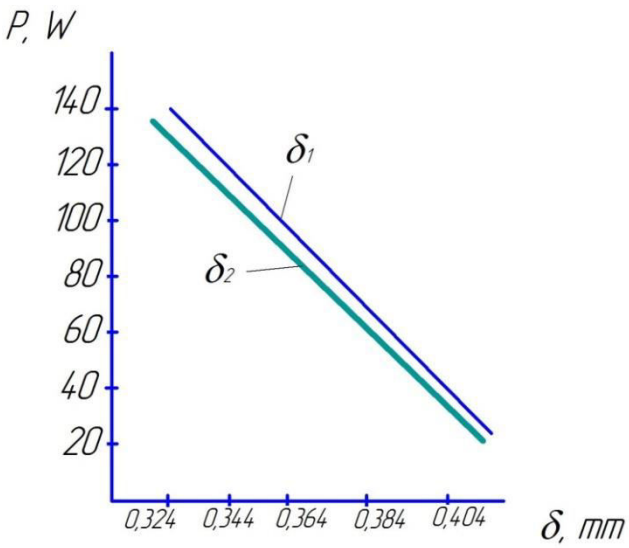

Figure-3. Relationship between value of power and cut width.

As a result of the carried out experimental study, it was established that the increasing power in the spark gap leads to an increase in the intensity of the removal of material, and, therefore, an increase in the speed of cutting Q_l. In the cutting zone there was intense evaporation and melting of metal under the action of non-stationary heat flux coming from heat sources, which have small sizes and small action time and which appear on electrodes under pulse charge.

It was demonstrated that an increase in the power of pulse leads to a decrease in the width of cut. This effect can be explained by the fact that during WCEDM constantly unwound not rigid wire electrode is used. Increasing power in the spark gap leads to an increase in the speed of cutting; a wire electrode is passing the machined zone faster. A decrease in the speed of cutting leads to the concentration of large thermal energy on a machined part and an increasing possibility of secondary spark charges, and, thus, increasing cut width.

The experimental data support the obtained mathematical model (8). It was demonstrated that due to a higher speed Q_l it is possible to make thinner cuts.

During the production of the part "Slot mask", it is necessary to provide the cut width not larger than 0.35 mm.

It was established that for production of the part with the designated cut width it is necessary to use the regime 2.

Figure-4 presents the actual values of the cut, which was obtained after machining using the regime 2.

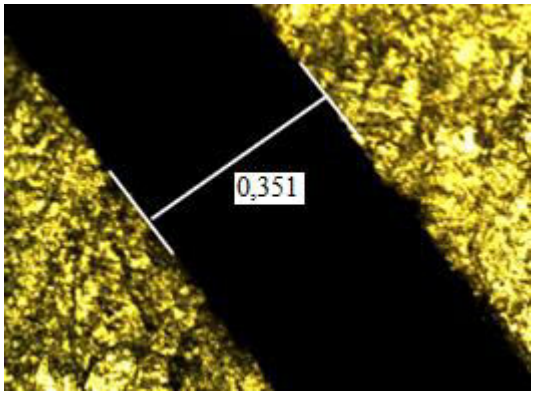

Figure-4. The cut width (using the regime 2).

The obtained cut width completely conforms with the designated requirements.

ACKNOWLEDGEMENTS

This study was carried out with financial support of the Ministry of Education and Science of Russian Federation under the state contract (basic part) No.11.9716.2017/BCh.

REFERENCES

[1] Ablyaz T.R. & Lesnikov R.V. 2016. Influence of the Wire EDM Conditions on the Cut Width. Russian Engineering Research. 36(9): 786-787.

[2] Ablyaz T.R. 2016. Roughness of the Machined Surface in Wire EDM. Russian Engineering Research. 36(8): 690-691.

[3] Ablyaz T.R., Khanov A.M. &Khurmatullin O.G. 2012. Sovremennyepodkhodyitekhnologiielektroerozionnoi obarabotkimaterialov [Modern Approaches and Technologies of EDM Processing of the Materials]. Perm: Perm National Research Polytechnic University.

[4] Zhurin A.V. 2005. Metodyraschetatekhnologicheskikhparametrovielektrodov-instrumentovprielektroerozionnoiobrabotke: diss. … kand. tekhn. nauk [Calculation Methods of Technological Parameters and Electrodes during EDM Processing (Ph.D. Thesis)]. Tula: Tula State University.

[5] SyanovS.Yu. 2002. Tekhnologicheskoeobespecheniekachestvapoverkhnostnogosloyadetaleiprielektroerozionnoiobrabotke:diss. … kand. tekhn. nauk [Technological Support of Quality of the Surface Layer of the Part during EDM Processing (Ph.D. Thesis)]. Bryansk: Bryansk State Technical University.

[6] Khanov A.M., Muratov K.R. & Gashev E.A. 2016. Investigation of the Abrasive Lapping Process of Oxide Ceramics. Oriental Journal of Chemistry. 32(1).

[7] Zelikman A.N. & Nikitina L.S. 1978. Volfram [Tungsten]. Moscow: Metallurgiya. p. 272.

[8] Huang J.T., Liao Y.S. & Hsue W.J. 1999. Determination of Finish-Cutting Operation Number and Machining Parameters Setting in Wire Electrical Discharge Machining. Journal of Materials Processing Technology. 87: 69-81.

[9] Rozenek M., Kozak J., Dąbrowski L. & ŁubkowskiK. 2001. Electrical Discharge Machining Characteristics of Metal Matrix Composites. Journal of Materials Processing Technology. 109(3): 367-370.

[10] Tosun N. & Cogun C. 2003. An Investigation on Wire Wear in WEDM. Journal of Materials Processing Technology.134 (3): 273-278.

[11] Tosun N., Cogun C.& Pihtili H. 2003. The effect of cutting parameters on wire crater sizes in wire EDM. The International Journal of Advanced Manufacturing Technology.21 (10): 857-865.

[12] Chua M.S., Rahman M., Wong Y.S. & Loh H.T. 1993. Determination of Optimal Cutting Conditions Using Design of Experiments and Optimization Techniques. International Journal of Machine Tools and Manufacture. 33(2): 297-305.

[13] Lee S.H. 2003. Optimization of Cutting Parameters for Burr Minimization in Face-Milling Operations. International Journal of Production Research. 41(3): 497-511.

[14] Yang W.H. & Tarng Y.S. 1998. Design Optimization of Cutting Parameters for Turning Operations Based on the Taguchi Method. Journal of Materials Processing Technology. 84: 122-129.

[15] Lin T.R. 2002. Optimization Technique for Face Milling Stainless Steel with Multiple Performance Characteristics. The International Journal of Advanced Manufacturing Technology. 19(5): 330-335.