VOL. 13, NO. 4, FEBRUARY 2018 ISSN 1819-6608
ARPN Journal of Engineering and Applied Sciences

www.arpnjournals.com

DESIGN AND IMPLEMENTATION OF FULL BRIDGE MODULAR DC-DC CONVERTER FOR SOLAR CONVERSION SYSTEMS

Sharon P, K. Parkavi Kathirvelu and R. Balasubramanian
Department of Electrical Engineering, Shanmugha Arts, Science, Technology and Research Academy University, India
E-Mail: sharon.paul17@gmail.com

ABSTRACT

Solar energy is anticipated to become the world's largest source of electricity and hence an effective design of Solar Energy Conversion System (SECS) that converts solar energy to electricity is mandatory. In huge rating power plants, converter with high voltage handling capability is required. In this work three level Input Series Output Series (ISOS) modular full bridge DC-DC converter has been proposed for Solar Energy Conversion System to meet high input voltage and high output voltage requirements. The Input Series Output Series (ISOS) connected modular DC-DC converter system enables the use of switches with lower voltage ratings for applications that demand high input and output voltage. As the input of the modular converter is varying with respect to irradiation variation, three loop control (TLC) is proposed in this work. The main objective of this work is obtain equal sharing of input and output voltages among the converters and to control input current and the output voltage to a desired constant value for a wide range of irradiance and load variations.

Index terms: modular DC-DC converters, input series output series, photovoltaic array, zero voltage switching, phase shifted full bridge, voltage sharing.

1. INTRODUCTION

Photovoltaic (PV) systems are rapidly gaining worldwide popularity due to its easy availability, non-polluting nature and renewable characteristics. It is also a fast growing industry with an estimated worldwide annual production of about 79 GW in 2016 [1] Solar energy conversion system is classified into a) Grid connected operating mode b) Islanded operating mode. In grid connected solar power systems, the solar panels are connected to the utility grid, such that when the surplus power produced by the panels is fed back to the grid. In Islanded mode or Stand alone mode, the solar panels are not connected to the grid, instead they are used to charge a bank of batteries which are then used by the electrical loads. In PV systems, DC-DC converters play a major role to boost the DC voltage and to extract the maximum energy harvesting. A grid connected PV system usually has the following components, PV arrays,

DC-DC converters, Inverters and Isolation transformers, as shown in Figure-1. Because of the growing prominence of solar power, power grids must handle more photovoltaic (PV) input than before. The challenge occurs in integrating the PV systems with the utility networks, as it requires DC-DC converters with high voltage conversion ratios to handle the high PV input voltage and also to provide isolation between the PV panels and the inverter stage [2]

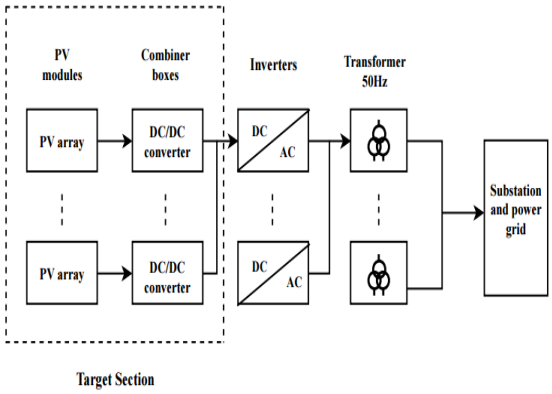

Figure-1. Typical PV power plant layout.

In general Buck converter, Boost converter, Buck-boost converter, CUK and SEPIC converters are used to boost the voltage [3]. Though, their voltage conversion ratio is less, Full Bridge DC-DC converters have been used. Conventional converters are not suitable because of the high voltage produced by the string of PV panels and it becomes necessary that the switching losses across the DC-DC converter modules should be reduced. This can be done by using a modular architecture for the converters. In a modular converter system as shown in Figure-2 the voltage from the array of solar panels is equally divided among the DC-DC Boost converter modules by using an input dividing capacitor ($C_{in,\ n}$) which equally divides the high input voltage across the modules. $C_{in,\ n}$ supply the corresponding converter module and the voltage stresses across the switches in each converter module is reduced considerably. Therefore, Low voltage and low power converter blocks called sub modules are connected in series or parallel in the input or in the output

side to achieve desired voltage and current specification depending upon the application requirement.

The advantages of modular converters include:

a) Redundancy gives reliability- in which the module at fault is by-passed and the other converter modules carry out the operation with little to no change in efficiency.

b) Standardization leads to shorter production cycles- as only one converter needs to be designed which is cost effective and less time consuming

c) Higher switching frequencies of the converters lead to reduced filter size.

Even though the input series output series (ISOS) modular DC-DC converter has many advantages, obtaining equal sharing of input and output voltage is difficult. In order to obtain equal sharing of input and output voltage many control schemes are used. Although it is mentioned in [4] that common duty ratio scheme used in ISOS system will result in a runaway condition in which the entire input voltage appears across only a particular converter even when small mismatches in turns ratio occurs, [5] proposes that for some circuit topologies like ISOS systems with two full bridge converters, common duty ratio scheme can be implemented. Though Duty cycle exchange control scheme, as in [6] provided the required results, the control strategy is effective with only ISOS systems with two converter modules and cannot be extended to any more converters. Control procedures in references [4]-[6] use a centralized controller with a master module which compromises the reliability and the redundancy property inherent to the modular converter should the master module fail to operate.

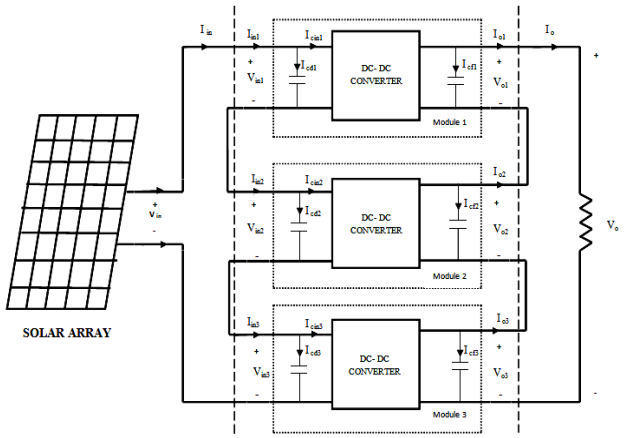

Figure-2. Solar panel interfaced ISOS connected modular DC-DC converter.

Therefore, a three loop control procedure for active sharing of Input Voltage (IVS) and Output Voltage (OVS) which improves the dynamic performance by individual input voltage and output current sensing for ISOS connected modular converters is implemented in [7].The proposed work needs a controller that has to accommodate wide variations on both the input side and on the output side; hence a three loop control scheme has been proposed in this work to obtain an equilibrium condition the modules.

Because of the high input voltage and to reduce the size of the passive components, the power devices are operated at high frequencies. This results in increased switching losses which lead to deterioration of converter efficiency. Therefore in the proposed work, to reduce switching losses, each module which consists of a phase shifted full bridge DC-DC converter is operated with Zero Voltage Switching (ZVS). The transformer leakage inductance (L_{lk}) and parasitic capacitances of the MOSFETs can be used advantageously here to achieve ZVS; hence additional snubber circuits are not required. This further reduces the size of the overall system leading to a converter structure that is compact and standardized

In this paper, Section I and Section II gives an overview and advantages of Input Series Output Series modular configuration. Section III briefs the need for an input voltage controller and in section IV three loop control scheme for dynamic changes in input voltages is defined. Small signal analysis is represented in Section V. Section VI and Section VII depicts simulation and experimental results respectively.

2. INPUT SERIES OUTPUT SERIES CONFIGURATION

Input series connection is preferred in applications where the input voltage is very high. Apart from modularity input series connection has several advantages such as:

a) As the input voltage is equally divided among the modules the voltage stresses on the power devices is less, therefore low voltage MOSFETs can be used.

b) Use of filters with reduced ratings due to interleaving of switches.

Figure-2 shows modular converters implemented with three ISOS connected converters and Table-1 shows the converter parameters of Solar panel interfaced ISOS connected modular DC-DC converter

Table-1. Converter parameters.

Terms	Parameters
$V_{in, i}$	Input voltage of i number of converter
$I_{in, i}$	Input current of i number of converter
$V_{o, i}$	Output voltage of i number of converter
$I_{o, i}$	Output current of i number of converter
$I_{cd, i}$	Current through i number of Input capacitive filter
$I_{cf, i}$	Current through i number of output capacitive filter
$I_{cin, i}$	Input current of i number of converter system
$I_{co, i}$	Output current of i number of the converter system

ARPN Journal of Engineering and Applied Sciences

The suffix i represents the converter number. Input and output filter capacitor currents are not included.

Then, by power conservation, we have

$$V_{in1} I_{in1} \eta_1 = V_{o1} I_{o1}$$
$$V_{in2} I_{in2} \eta_2 = V_{o2} I_{o2}$$
$$V_{in\,n} I_{in\,n} \eta_n = V_{o\,n} I_{o\,n} \quad (1)$$

Where η_1, η_2. . . η_n are the efficiencies of the individual converter modules [8]. For ISOS full bridge DC-DC, the input and output currents to each converter module is equal. Thus from (1) we get,

$$V_{in1} \eta_1 : V_{in2} \eta_2 : \cdots : V_{inn} \eta_n = V_{o1} : V_{o2} : \cdots : V_{o\,n} \quad (2)$$

for ISOS systems, from (2), if the input voltages of the module are controlled to be shared equally among the converters, the module output voltages will be nearly equal.

3. NEED FOR AN INPUT VOLTAGE CONTROLLER

For converters with identical parameters, the controller applies the same duty ratio to all the converters. Even when converters of the same parameters are taken, some mismatches can occur in terms large transformer leakage inductance (L_{lk}) and turns ratio (n) which are difficult to maintain to a constant value. Hence, without an input voltage controller the duty ratio to each converter will be different. The entire input voltage appears across the converter with the higher duty ratio resulting in a run way condition [4], and there is no input voltage sharing. The proposed work has a solar panel array as the source whose voltage varies widely according to the irradiance condition and it becomes necessary to have a proper form of control on the input side such that the same duty ratio is applied to all the converter modules.

4. THREE-LOOP CONTROL (TLC) SCHEME FOR ISOS CONFIGURATION

Figure-3 shows the overall control procedure for three converters. The scheme consists of current mode input voltage sharing (IVS) control with three control loops to ensure input and output voltage sharing. Current reference to the inner current loop is provided by the output voltage loop that is common to all the three converter modules. G_{Vo} is the compensator for the outer voltage loop and G_{Io} is the compensator for individual inner current loops. In this control scheme two voltage control loops and one current control loop is used to control ISOS DC-DC converter. The outer voltage loop changes the reference to the inner current (I'_{ref}). I'_{ref} to the input voltage loop is taken as the average of the input voltage of each converter module.

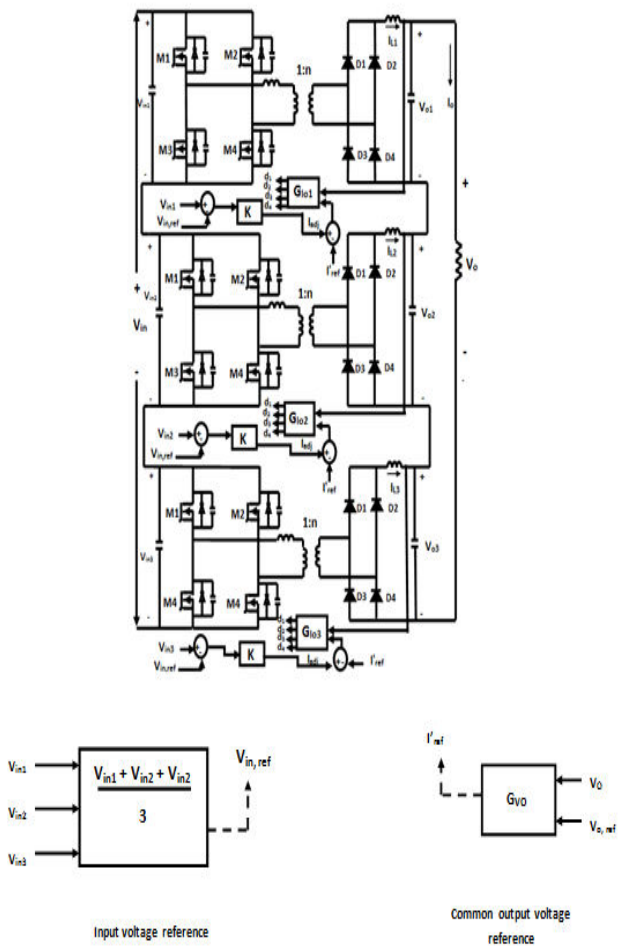

Figure-3. TLC with input voltage reference for three modular converters. G_{Vo} and G_{Io} are the output voltage loop gain and inner current loop gain respectively.

A proportional controller K is used to regulate the input voltage control loops in accordance with conditions such as input voltage change due to changes in irradiation condition and is chosen according to the mismatches between input and output voltage regulation loops. The differences in the module efficiencies depend on the mismatches in the switches and parasitic resistances in individual modules [9]. Practically, as the topologies of the modules are identical, mismatches due to the above reasons are not so large; the differences among the modules are negligible. Therefore a common duty ratio is given to all the converter modules. Figure-4 shows the control block diagram of module 1, module 2 and module 3. G_{vo} is the common output voltage compensator, while G_{Io1}, G_{Io2}, G_{Io3} are individual current compensators for inner current loops. G_{1id}, G_{2i}, G_{3id} are the transfer functions of the three modules respectively.

ARPN Journal of Engineering and Applied Sciences

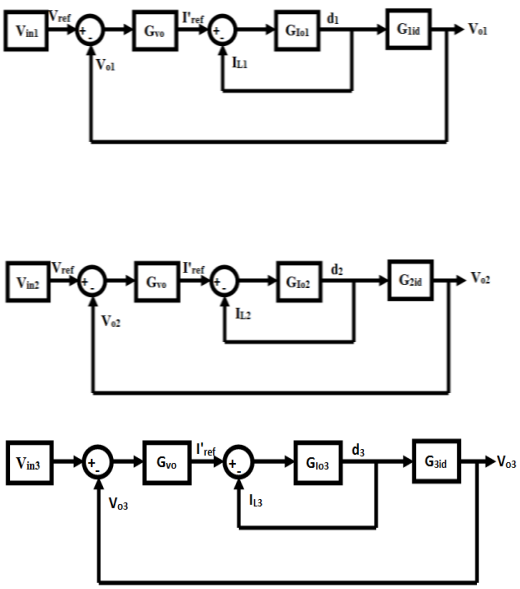

Figure-4. Control scheme block for module 1, module 2, and module 3.

5. SMALL SIGNAL ANALYSIS

When Small signal analysis is performed by state space averaging as in [10], it would be tedious as it requires solving third-order system consisting of six systems of equations corresponding to six modes of operation of a phase shifted PWM converter. In this work, small signal transfer functions has been derived with the effects introduced due to phase shifting operation and the duty cycle modulation introduced due to change in filter inductor current and input voltage. The small-signal transfer functions of this converter, therefore, will depend on the perturbations of the filter inductor current L_{lk}, f_s, I_L, V_{in} and duty cycle of the primary voltage d[11]. Small-signal circuit model of the proposed PS-PWM converter is given in Figure-5 duty cycle modulation of the filter inductor current is given as

$$d_i = \frac{-R_d I_L}{nV_{in}} \tag{3}$$

Where

$$R_d = 4n^2 L_{lk} f_s$$

$n = \frac{N_s}{N_p}$ is the turns ratio

Duty cycle modulation of the input voltage is given as

$$d_v = \frac{R_d I_L V_{in}}{nV_{in}^2} \tag{4}$$

This effect can be taken as an additional feed forward of input voltage. The above results can be incorporated into the averaged small signal analysis of the conventional boost PWM converter by replacing the duty cycle d, by the total change of d_{eff} which is given by

$$d_{eff} = d + d_i + d_v \tag{5}$$

The contribution of d_i and d_v is given as two separate controlled sources, d_i and d_v occurs due to perturbation in i_L and v_{in} and is not controllable by the control circuit.

The transfer function of the output filter is obtained as

$$H = 1/\Delta_f = \frac{1}{(s^2 LC + sL/R + 1)} \tag{6}$$

Input impedance of the output filter is

$$Z_f = \frac{R\Delta_f}{1 + sRC_f} \tag{7}$$

Output impedance of the output filter is

$$Z_n = \frac{sL}{\Delta_f} \tag{8}$$

Where

$$\Delta_f = s^2 LC + sL/R + 1$$

The control-to-output transfer function is

$$G_{vd} = \frac{nV_{in}^2 \omega_0^2}{s^2 + s(1/RC + R_d/L) + \omega_0^2} \tag{9}$$

Or

$$G_{vd} = \frac{nV_{in}^2 \omega_0^2}{s^2 + 2\omega_0 \varepsilon + \omega_0^2} \tag{10}$$

Where,

ε is the damping of the second order denominator given by

$$\varepsilon = \frac{1}{2R}\sqrt{\frac{L}{R}} + R_d \sqrt{\frac{C}{L}}/2$$

Control-to-filter inductor current transfer function is

$$G_{id} = \frac{nV_{in}}{Z_f + R_d} \tag{11}$$

The specification of the system is given in the Table-2.

Table-2. System specification of ISOS connected modular DC-DC converters.

Components	Values
Rated Input voltage, V_{in}	600 V
Output Voltage, V_{out}	1200 V
Rated Load, R	400 Ω
Switching frequency, F_s	25KHz
Transformer turns ratio, n	2
Filter inductance, L_f	1000μH
Filter capacitance, C_f	10μF
Transformer leakage inductance, L_{lk}	60μH
Input dividing capacitor, $C_{d1} = C_{d2} = C_{d3}$	4nF

For output voltage regulation loop (OVR), compensator G_{vo} is implemented by proportional integral (PI) type controller, and is expressed as,

$$G_{vo}(s) = k_p + k_i / s \tag{12}$$

The compensator for the inner current loop is also a PI type which is expressed as,

$$G_{Io}(s) = 9.6 \times 10^7 + 0.8/s \tag{13}$$

Thus we can conclude that stability can be achieved for ISOS connected DC-DC modular converters with three loop control scheme if PI parameters for the voltage compensators and current compensators are selected properly.

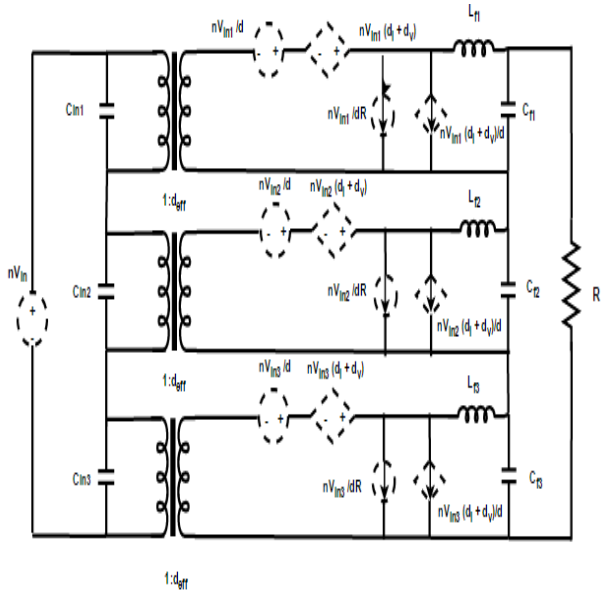

Figure-5. Small-signal circuit model of the proposed PS-PWM converter.

4. SIMULATION RESULTS

The proposed scheme is simulated for three modular converter systems with identical parameters. Figure-7 and Figure-8 gives individual input and output voltages of each module and also the total input and output voltage for an irradiance of 1000W/m^2 under STC. The input and the output voltages are equally shared. While Figure-9 and Figure-10 gives individual input and output voltages of each module and also the total input and output voltage for a lower irradiance of 700 W/m^2. Figure-11 gives Total input current from the panel and the total output current for an irradiance of 700 W/ m^2. It can be seen that in spite of the wide variation in irradiance, the input and the output voltages are maintained constant resulting in power balance. Efficiency of the converter is as high as 91%.

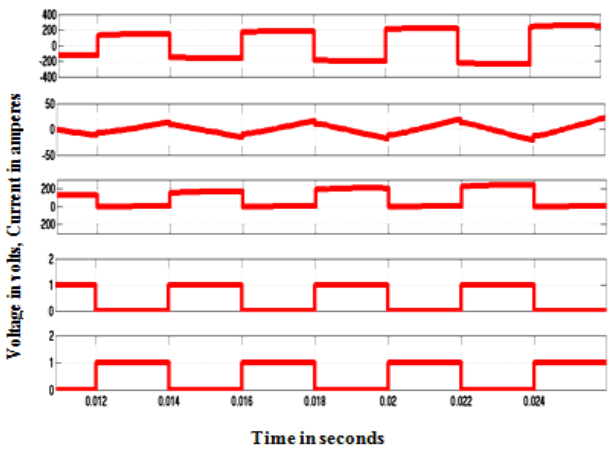

Figure-6. Primary transformer voltage (1000V/div), Inductor current (50A/div), Drain source voltage (500V/div), Gate pulses (5v/div).

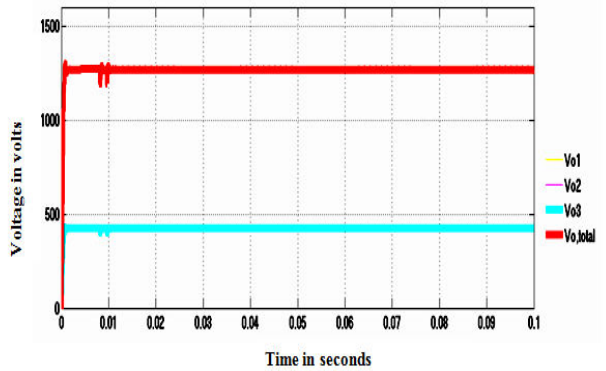

Figure-7. Total output voltage (200V/div), individual output voltages of each module for an irradiance of 1000 W/ m^2.

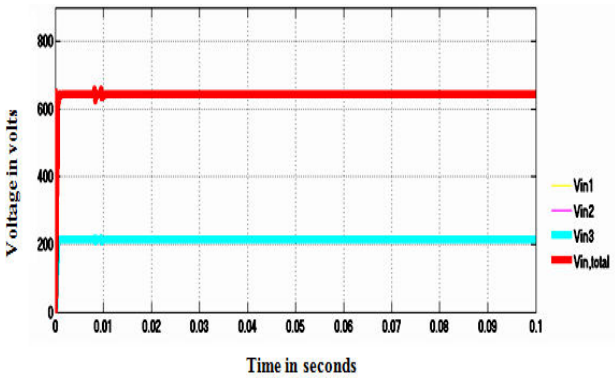

Figure-8. Total input voltage (200V/div), individual input voltages of each module for an irradiance of 1000 W/ m^2.

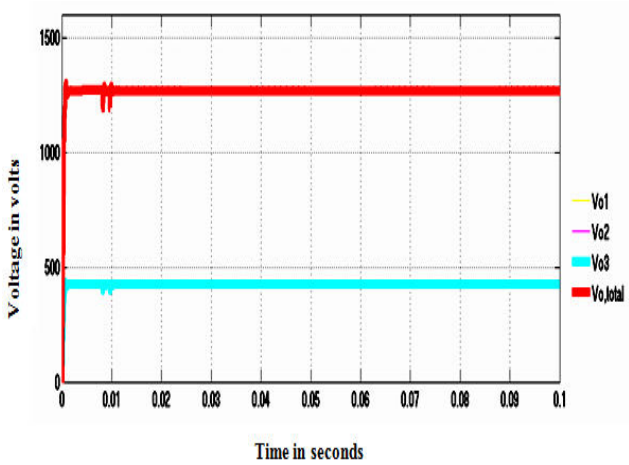

Figure-9. Total output voltage (200V/div), individual output voltages of each module for an irradiance of 700 W/ m^2.

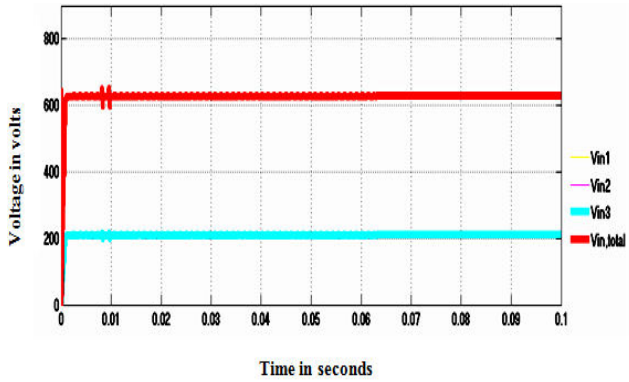

Figure-10. Total input voltage (200V/div), individual input voltages of each module for an irradiance of 700 W/ m^2.

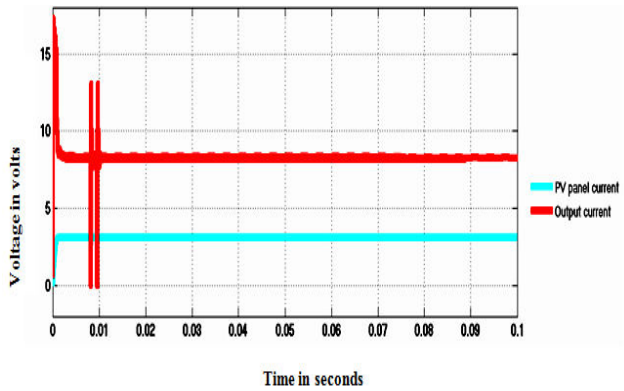

Figure-11. Total input current from the panel (200V/div), total output current for an irradiance of 700 W/ m^2.

Table-3. Efficiency table of converters under varying irradiance condition.

Load Ω	PV cell voltage V_{in}	Output voltage V_0	Converter efficiency η (%)
2000	628.5	1235	90
3000	641.4	1266	88
400	646.2	1279	87
500	648.8	1285	86
600	650.3	1289	84
700	651.4	1292	80

Table-4. Efficiency table of converters under varying irradiance condition.

Irradiance (W/m^2)	PV cell voltage V_{in}	Output voltage V_0	Converter efficiency η (%)
1000	646.2	1280	90
900	641.9	1272	88
800	636.4	1264	84
700	629.2	1252	81

VOL. 13, NO. 4, FEBRUARY 2018 ISSN 1819-6608
ARPN Journal of Engineering and Applied Sciences

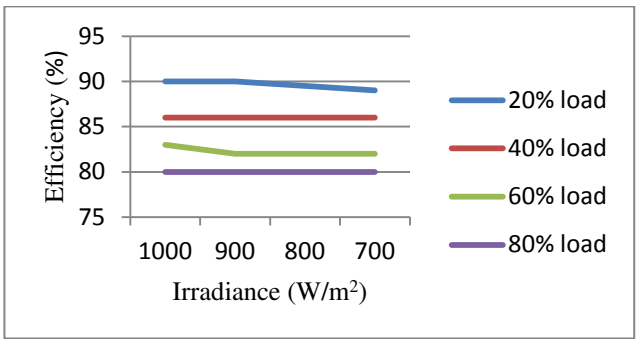

Figure-12. Efficiency curve for various values of irradiance and load conditions.

7. EXPERIMENTAL RESULTS

To experimentally verify the proposed connection's operation, a prototype is designed and implemented according to Table VI and interfaced with a PV panel with specifications as given in Table-5. The laboratory prototype is implemented with two converter modules with an input voltage (V_{in}) of 8V which is boosted by a high frequency transformer with a switching frequency (F_s) of 25 KHz to an output voltage (V_{out}) of 16V across a 60W load. Photograph of the implemented prototype is given in Figure-13.

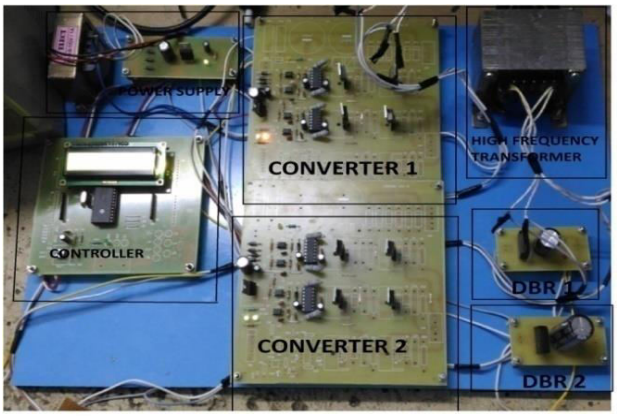

Figure-13. Photograph of the implemented laboratory prototype.

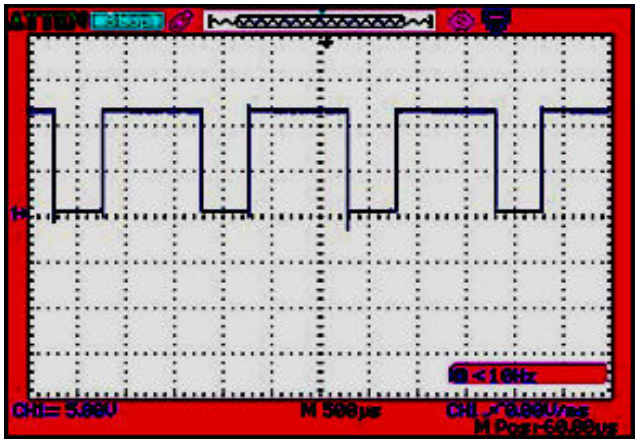

Figure-14. Gate pulses for the Mosfets M1 and M4.

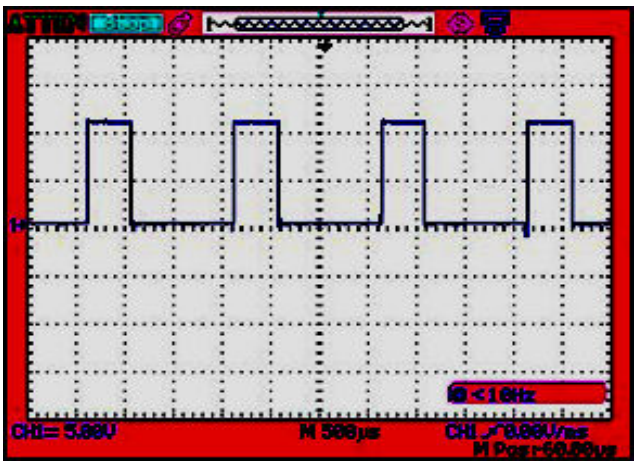

Figure-15. Gate pulses for the Mosfets M2 and M3.

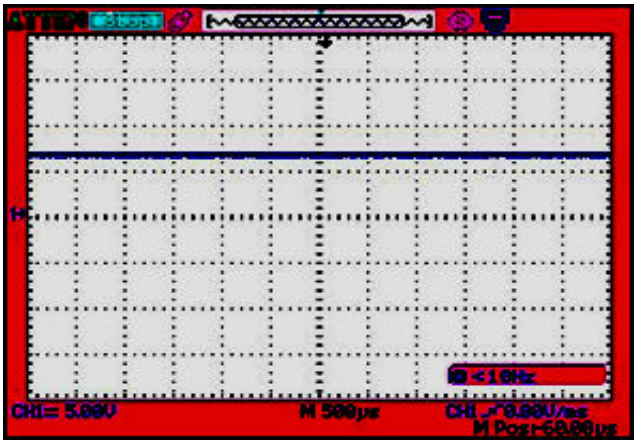

Figure-16. Total output voltage (5V/div) for an Irradiance of 1000W/m^2 for the two converter system supplied by the PV panel with specifications as given in Table-5.

Table-5. PV panel specifications.

Parameter	Specifications
P_{mp} (Wp)	5
I_{mp} (A)	0.59
V_{mp}(V)	8.5
I_{sc} (A)	0.66
V_{oc} (V)	10.7

Gate pulses are generated for all the switches in the modules with the controller implemented using PIC16f877a. Figure-14 to Figure-15 shows the phase shifted gate pulses to the switches M1 to M8. Figure-16 shows the total output voltage of the two series connected modular converters.

Table-6. Main component list.

Mosfets (M1 to M8)	**IRF840**
Diodes	IN4007
Capacitors	2200 µF, 63V
Drivers	FAN7392N
Phase shifted PWM controller	PIC16f877a

CONCLUSIONS

An Input Series Output Series (ISOS) connected converter topology is explored and analyzed for PV interfaced modular DC-DC converter system. The following has been achieved in this work,

a) High converter efficiency 90% at an irradiation of 1000 W/m^2 STC and 81% at an irradiation of 700 W/m^2

b) A flat efficiency curve i.e., a constant efficiency has been obtained as shown in Figure-12 under full load and under lower loads for different irradiation values.

c) Input voltage and output voltage sharing and hence power balance and equilibrium condition ensured among the converter modules.

d) Low voltage rated switches are used because of series connection in the input and in the output

e) PV panel current i.e., Input current and hence the input voltage has been maintained to a required constant value for a wide range of irradiation values

f) PV panel voltage has been boosted by the series connected modular converter system to the required load voltage and maintained at the optimum constant value for a wide range of load conditions.

REFERENCES

[1] Om V. Bapatl and Vishram N. Bapat. 2016. An Overview of Solar Energy Policy of India and Few Prominent Nations in the World. IEEE International Conference on Power Electronics, Intelligent control and Energy systems, 4-6 July 2016.

[2] Ruben Otero-De-Leon, Ned Mohan. 2015. Full-Bridge Modular Multilevel Converter with High Frequency Link for Photovoltaic Applications. IEEE 24th International Symposium on Industrial Electronics.

[3] Omar Abdel Rahim, Mohamed Orabi, Emad Abdelkaim. 2012. Switched inductor boost converter for PV applications. IEEE Applied Power Electronics Conference and Exposition (APEC), 5-9 Feb.

[4] Raja Ayyanar, Ramesh Giri and Ned Mohan. 2004. Active Input-Voltage and Load-Current Sharing in Input-Series and Output-Parallel Connected Modular DC-DC Converters Using Dynamic Input-Voltage Reference Scheme. IEEE transactions on power electronics. 19(6).

[5] Ramesh Giri, Raja Ayyanar, N. Mohan. 2006. Common Duty Ratio Control of Input Series Connected Modular DC-DC Converters with Active Input Voltage and Load Current Sharing. IEEE Trans. On Ind. Electronics. 42(4): 1101-1111.

[6] Deshang Sha, Kai Deng and Xiao Zhong Liao. 2012. Duty Cycle Exchanging Control for Input-Series-Output-Series Connected Two PS-FB DC-DC Converters. IEEE Transactions on Power Electronics. 27(3).

[7] Ramesh Giri, Raja Ayyanar and Enrique Ledezma. 2004. Input-Series and Output-Series Connected Modular DC-DC Converters with Active Input Voltage and Output Voltage Sharing. Applied Power Electronics Conference and Exposition. 3, 22-26 Feb.

[8] Wu Chen, Xinbo Ruan, Hong Yan, and Chi K. Tse. 2009. DC/DC Conversion Systems Consisting of Multiple Converter Modules: Stability, Control, and Experimental Verifications. IEEE transactions on power electronics. 24(6).

[9] Chen, Wu, Kai Zhuang and Xinbo Ruan. 2009. An Input-Series- and Output-Parallel-Connected Inverter System for High-Input-Voltage Applications. IEEE Transactions on Power Electronics. 24(9).

[10] P. Wang, C. Liu, L. Guo. 2013. Modelling and Simulation of Full-Bridge Series Resonant Converter Based on Generalized State Space Averaging. Applied Mechanics and Materials. 347-350: 1828-1832.

[11] Vlatko Vlatkovic C, Juan A. Sabate, Raymond B. Ridley, Fred C. Lee and Bo H. Cho. 1992. Small-Signal Analysis of the Phase-Shifted PWM Converter. IEEE Transactions on Power Electronics. 7(1).