VOL. 13, NO. 4, FEBRUARY 2018 ISSN 1819-6608
ARPN Journal of Engineering and Applied Sciences

www.arpnjournals.com

ANALYSIS OF DIFFERENT MODULATION FORMATS FOR 10G HYBRID-PASSIVE OPTICAL NETWORKS

N. Subhashini and A. Brintha Therese
Vellore Institute of Technology University, Vandalur Kelambakkam Road, Chennai, India
E-Mail: subhashini.n@vit.ac.in

ABSTRACT

Optic fibre plays a major role in the access part of the network. Hybrid Passive Optical Network combines the advantages of TDM based EPON Network and the WDM PON network. The objective of this paper is to compare different modulation formats in a 16-channel Hybrid Passive Optical Network and to analyse their performance. The network has a transmission rate of 10 Gbps per channel. Different modulation formats like Non return to zero (NRZ), Return to Zero (RZ), Carrier Suppressed RZ (CSRZ), Duobinary (DB) and Modified Duobinary formats are compared and their performances are evaluated. Simulation results are obtained using Optisystem. It is seen that DB Modulation format provides a longer reach equal to 105km and Mod DB formats is the second best providing a maximum reach of up to 75 km.

Keywords: passive optical networks, WDM-PON, hybrid PON, modulation formats.

1. INTRODUCTION

With growing number of applications and the network traffic, optic fibre is extensively used in the access part of the network [1]. Passive optical network encompasses the network connected by optic fibre between the Central Office (CO) and the end subscriber. The network elements between the Central Office and the subscriber constitute the Optical Distribution Network (ODN). Only passive devices are used in the ODN. The Central Office has the OLT (Optical Line Terminal) which connects the PON to the core network. The Optical Networking Unit (ONU) terminates the PON and provides a number of services to the user like voice, video, data etc [2]. The advantage of using a PON is that lesser length fibers are used and the central office equipment is shared by a number of subscribers. There are different variants of PON like the EPON which is TDM (Time Division Multiplexing) based and the WDM (Wavelength Division Multiplexing) PON. In an EPON network, information in the downstream direction are broadcasted to all subscribers who share fibers and for upstream transmission from the ONUs, multiple access protocol like the TDMA (Time division multiple access) is used. 802.3 Ethernet frames are used which has a symmetric 1 Gbps upstream and downstream transmission rates. 1490 nanometre (nm) and 1310 nm is used for downstream traffic and upstream traffic respectively. Overlay services like the RF (analog) video reserves the 1550 nm wavelength [3]. IEEE 802.3 was amended to IEEE 802.3av to form 10 Gbit/s EPON which supports concurrent operation of 10 Gbit/s on one wavelength downstream and 1 Gbit/s on a different wavelength for upstream operation on the same PON. There are 40 million EPON ports installed currently.

In a WDM PON network, several virtual PONs co-exist in the same PON architecture. Each ONU is assigned a specific wavelength. Transmission to/from an ONU happens through the assigned wavelength. It achieves better privacy and scalability as each ONU receives only its own wavelength but the cost of the WDM components and the initial setup cost of WDM network are very high. Also temperature can make the wavelength to drift. So appropriate temperature control measures are needed. WDM-PON provides better privacy and scalability is improved as each ONU is dedicated to only one wavelength but the drawback is that it is quite expensive and the bandwidth is not utilised to its maximum extent [4,5]. In order to combine the benefits of EPON and WDM PON, Hybrid PON is proposed in which a subset of ONUs share a single wavelength and thus it combines the advantages of both EPON and WDM PON [6].

The role of Modulation formats; optical components, optical amplifiers and optical fibers have been proved to be the key players to provide high spectral efficiency in optical networks. Modulation format specifies how the bit stream is converted from electrical to optical domain. The information is carried either in amplitude, Phase or polarisation of the signal [7].

In Literature, different types of modulation formats used are discussed [8-12]. Also the effect of different modulation format in the transmitter of WDM PON has been studied [13, 14].Our focus is on the analysis of different modulation formats - Amplitude shift keying (ASK) or the on-off keying (OOK) modulation formats such as a NRZ (non-return to zero), RZ (return to zero), CSRZ (Carrier Suppressed RZ), DB (Duobinary) and Modified Duobinary formats, in a hybrid PON.

2. DATA MODULATION FORMATS

In the RZ modulation format, the signal returns to zero between each pulse even if a number of consecutive 0s or 1s occur in the signal. A separate clock is not required to be sent along with the signal, but it uses twice the bandwidth to achieve the same data-rate as compared to non-return-to-zero format. The RZ pulses are broadened more rapidly by dispersion and this makes it more robust to the effect of nonlinearity as the non-linearity effect is proportional to the signal intensity. For required receiver sensitivity, the transmitted power can also be lowered by

employing the RZ signal format rather than the NRZ. This implies that that the transmission distance can be increased compared with the NRZ signal for the same transmitted power

In NRZ, ones are represented usually by positive voltage and zeros are represented usually by a negative voltage, with no neutral or rest condition. It is the most widely used modulation format because of its lesser signal bandwidth by a factor of 2 when compared to the RZ modulation format. It can also be easily configured. However, it is influenced by the inter-symbol interference, dispersion and non-linearity.

In CSRZ modulation format which is a pseudo-multilevel modulation format the information is encoded on the intensity levels (representing logical one and zero), but for every bit, the phase is changed by π. Because of this phase alternation it does not have any DC component. Carrier is suppressed in the spectrum. The bandwidth is also less when compared to conventional Return to Zero format. It is also considered to be more tolerant to nonlinear impairments in a channel and provides an improved spectral efficiency in high bit rate systems.

In Duo-binary modulation format, two intensity levels are used for information encoding and phase is changed by π only for 1-bits separated by an odd number of 0-bits. The advantage of DB format is that it has an increased tolerance for the effects of chromatic dispersion and has a reduced spectral width. It can be used for transmission over long spans of fiber without the need for dispersion compensation.

Modified Duo-binary modulation format has a much narrower optical bandwidth when compared with a Duobinary format. This leads to a greater dispersion tolerance and higher fiber non linearity tolerance. Here, the phases of two groups of "ones" that wrap an isolated "zero" are flipped, which leads to a reduced ghost pulse generation caused by intra-channel four-wave mixing. Two optical modulators are required to obtain this signal; one to generate NRZ duo-binary signal and the other to convert the NRZ data to RZ signal. This however leads to increased transmission cost.

Considering all the above modulation formats each with its own pros and cons, the main objective of this paper is to analyse the modulation formats to understand which format provides longer reach in a hybrid PON Network.

3. SIMULATION MODEL

In the model considered for simulation, Hybrid PON optical access system consists of 4 channels, each channel consisting of a Passive splitter connected to 4 ONUs. This is shown in Figure-1. The transmission speed is 10 Gbit/s per channel with central frequency as 193.1 THz. The channel spacing is chosen to be 100 GHz which is the recommended spacing as per ITU-T G.694.1 recommendation. The simulation is carried out using Optisystem [15]

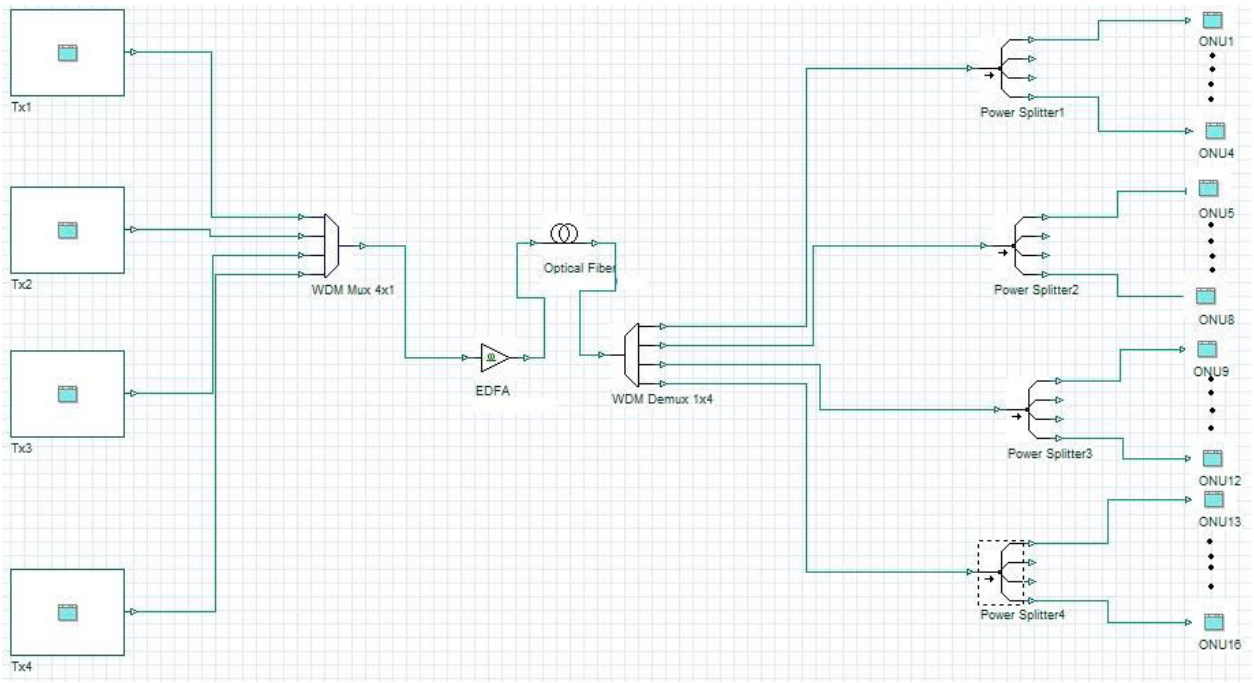

Figure-1. Simulation set up of 4 channel hybrid PON network with 16 subscribers with a transmission speed of 10Gb/s per channel.

OLT interconnects the access network with the service provider's network. OLT is located in the Central Office (CO) and the optical receiver is placed at ONU in the subscriber's premises. OLT consists of an optical transmitter. Here only the downstream transmission is considered. The Optical Distribution Network contains a WDM Multiplexer, EDFA and the WDM de multiplexer. All the elements in the ODN are connected to the ONUs

through a single mode fiber (SMF). 3 dB insertion loss is provided by the multiplexer and demultiplexer. Transmitters employing different modulation formats are shown in Figure-2 to Figure-6.

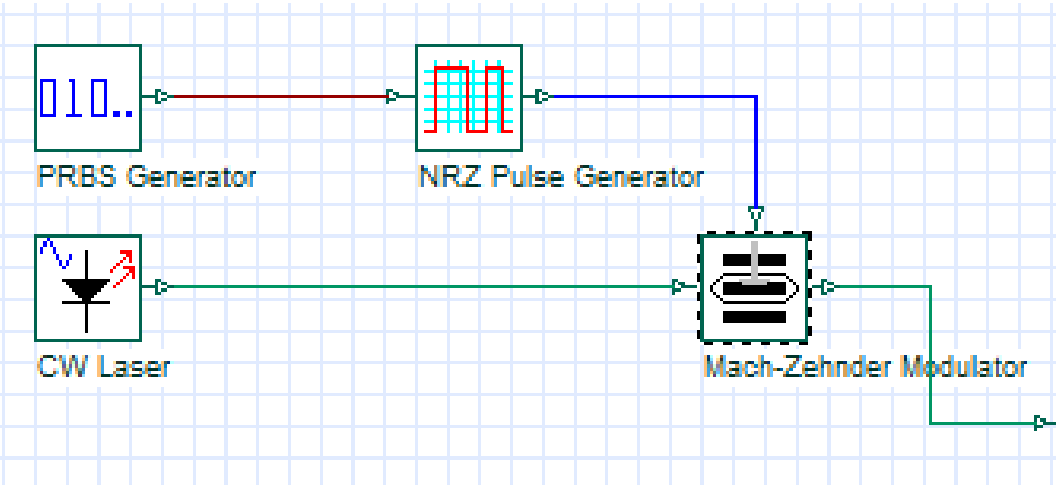

Figure-2. Optical transmitter to implement NRZ modulation format.

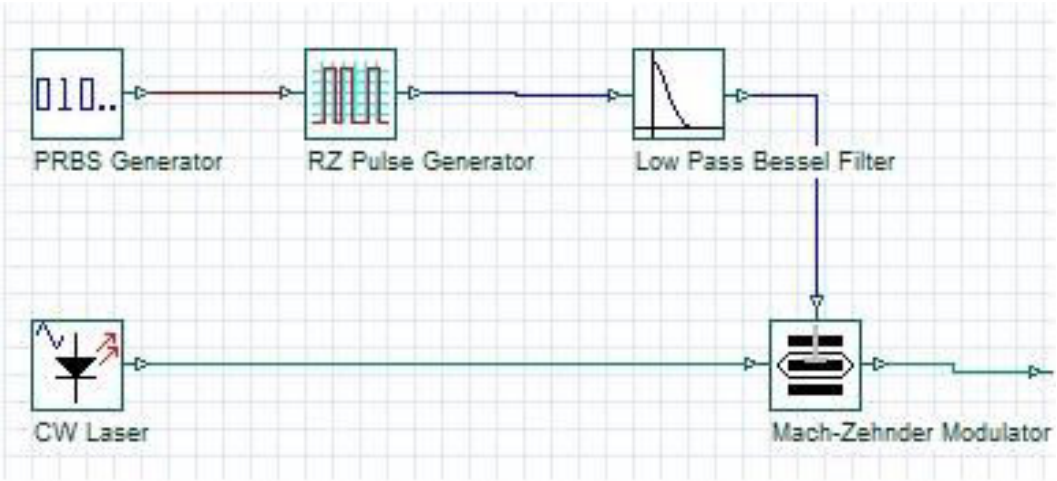

Figure-3. Optical transmitter to implement RZ modulation format.

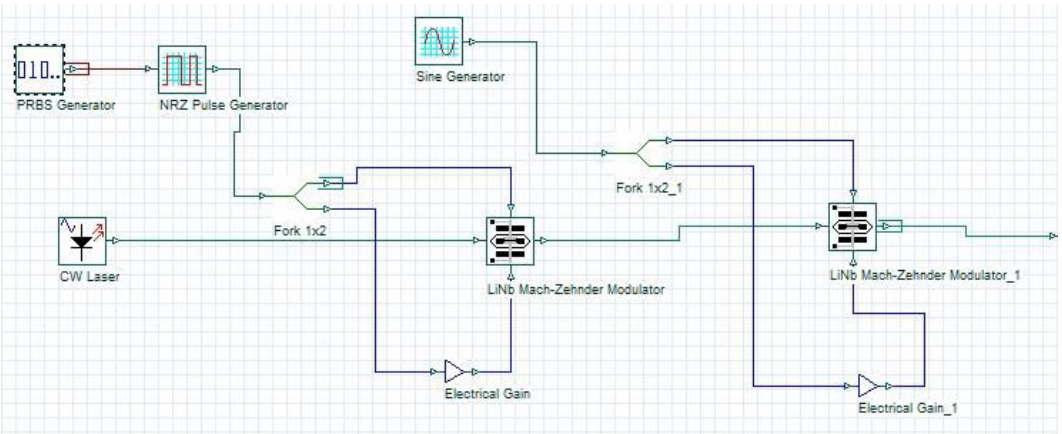

Figure-4. Optical transmitter implementing CSRZ modulation format.

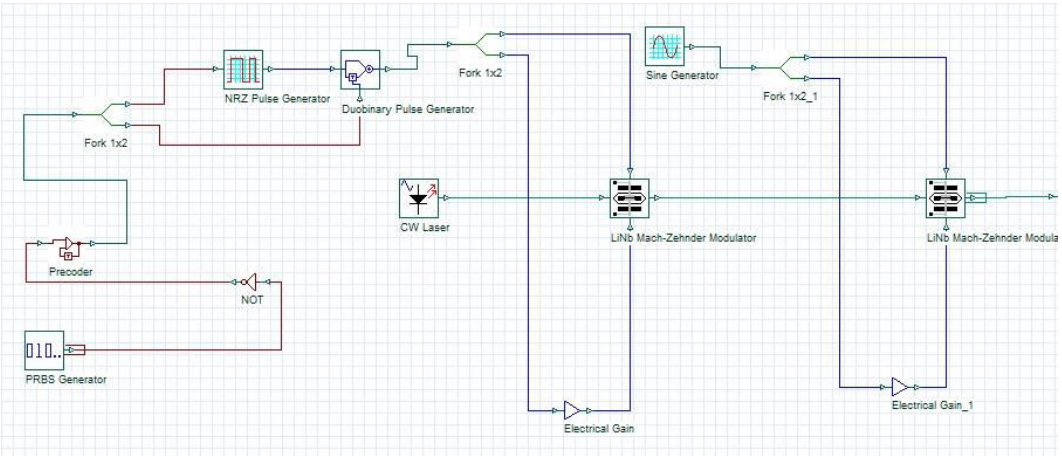

Figure-5. Optical transmitter implementing Duobinary modulation format.

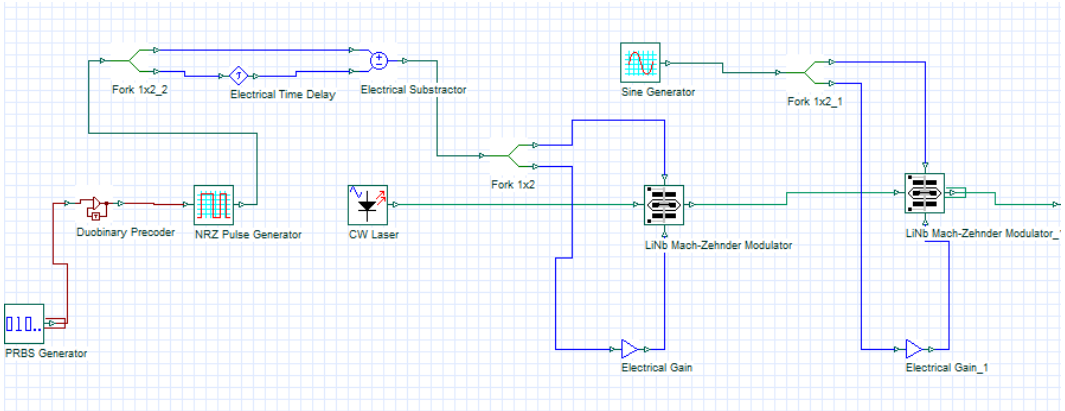

Figure-6. Optical transmitter implementing Mod-Duobinary modulation format.

A PRBS (Pseudo Random Bit Sequence) generator is used for generating NRZ pulses. This generator has a bit rate of 10 Gbit/s. The electrical signal is then provided to the Mach- Zehnder modulator (MZM). The MZM has a continuous wave (CW) laser. This is shown in Figure-2. The CW laser has an output power of +2dBm and a line width of 10MHz. Output optical signal is obtained from the output of MZM.

Figure-3 shows an RZ transmitter. In this, the only difference between this and NRZ transmitter is that electrical signal is generated by RZ pulse generator followed by a low pass Bessel filter of order 5.

In CSRZ transmitter, Modulation is done in two stages. Phase or intensity modulation is carried out by the first Mach Zender Modulator. A sinusoidal signal with frequency equal to half of the bit rate is applied to the second MZM modulator. This applies an alternate optical phase between o to π for the neighbouring time slots and is shown in Figure-4

Figure-5 shows the Duobinary transmitter. An NRZ Duobinary signal is first created using a precoder and a Duobinary pulse generator. The output of which then drives the first MZM modulator which is then followed by a second modulator. A sinusoidal signal is used to drive the second modulator. In the modified duo binary transmitter shown in Figure-6 the phase of bits '1's are modified only after a bit '0' appear which alternates between 0 and π for the bits '1'.

4. RESULTS AND DISCUSSIONS

In this paper we have analysed 5 different modulation formats such as NRZ, RZ, CSRZ, Duo Binary, and the Modified Duo- binary signal with an objective to identify the most suitable modulation format for Hybrid PON. The eye diagrams obtained by simulating the different modulation formats are shown in Figure-7. The Bit Error is analysed for different lengths for each of the modulation formats and is shown in Figure-8. The BER of less than 10^{-9} is used for evaluating the performance of the network. Figure-9 shows the Qfactor achieved by the different modulation formats.

The Maximum distance up to which transmission is possible is 105 Km. A Bit Error Rate of < 10^{-9} is achieved for this distance by using DB modulation format when an EDFA of +20dBm output power is used. The optimum length of EDFA was chosen based on optimisation results using simulation. This is necessary to choose the right gain and length of EDFA so as to provide sufficient power for transmission without causing any nonlinear effects.

Mod-DB Modulation format results in a transmission distance of 75 kms under the same conditions

and RZ Modulation format with just 45 kms. The worst results are obtained from CSRZ and NRZ Modulation formats which shows BER>10^{-9}. Though NRZ modulation format is widely used, the maximum transmission distance yielded is very less as it has less tolerance to dispersion effects and is found to be highly unsuitable for a Hybrid Access Network.

5. CONCLUSIONS

The maximum transmission distance is dependent on many factors like, the type of fiber, light sources, frequency of transmission and bandwidth. We chose SMF as fiber type, laser light source, transmission of frequencies in the range of 1300nm to 1580nm the bandwidth is shared between a number of ONUs in the hybrid Network and this made it necessary to analyse the modulation format's role in determining the transmission distance of the fiber. The commonly used NRZ format produces the worst result when compared to the other modulation formats used for investigation (RZ, CSRZ, mod DB and DB). The DB Modulation format helps to accomplish the longest transmission distance of up to 105 kms with BER<10^{-9} and Mod DB showed a transmission distance of 75 km The performance of RZ format at distances below 35 km is good. So for short distance transmission, RZ can be preferred because of its ease of implementation.

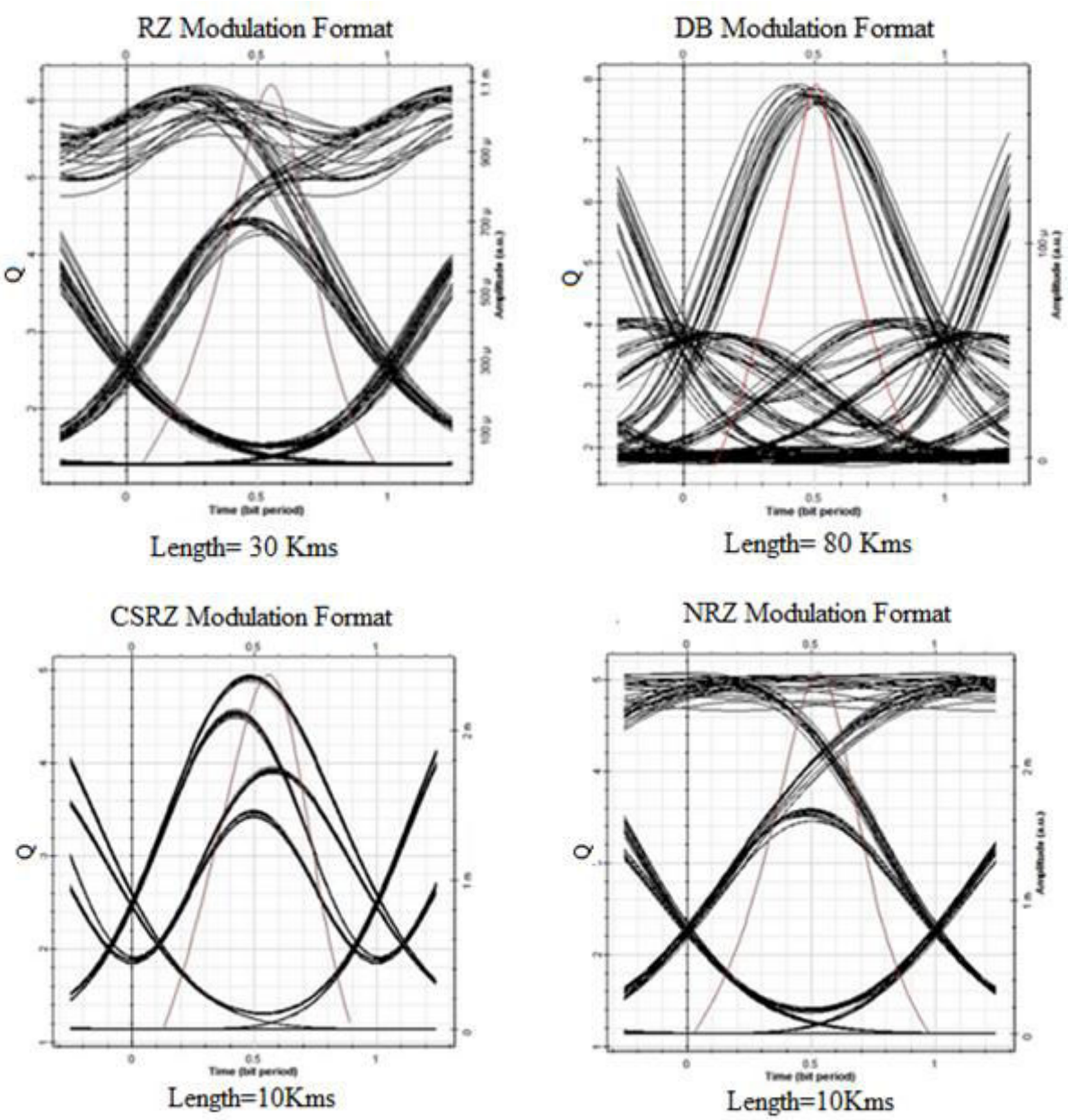

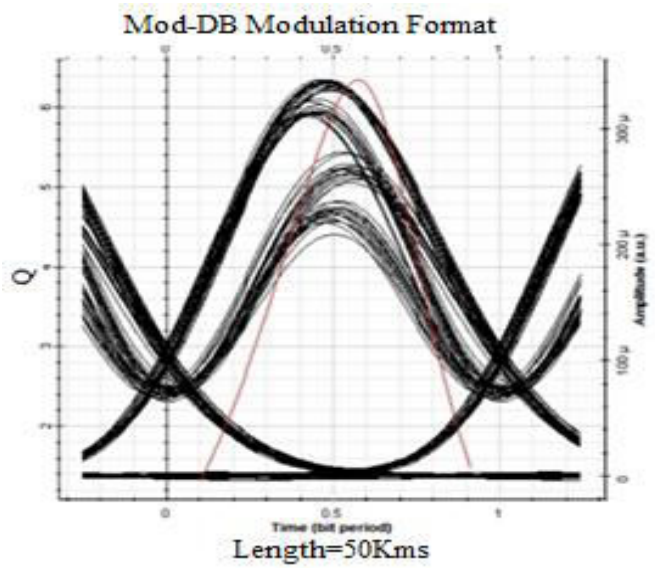

Figure-7. BER diagrams of the different modulation formats-(a) RZ, (b) Duobinary (c) Carrier suppressed return to zero, (d) NRZ, (e) Mod-DB format.

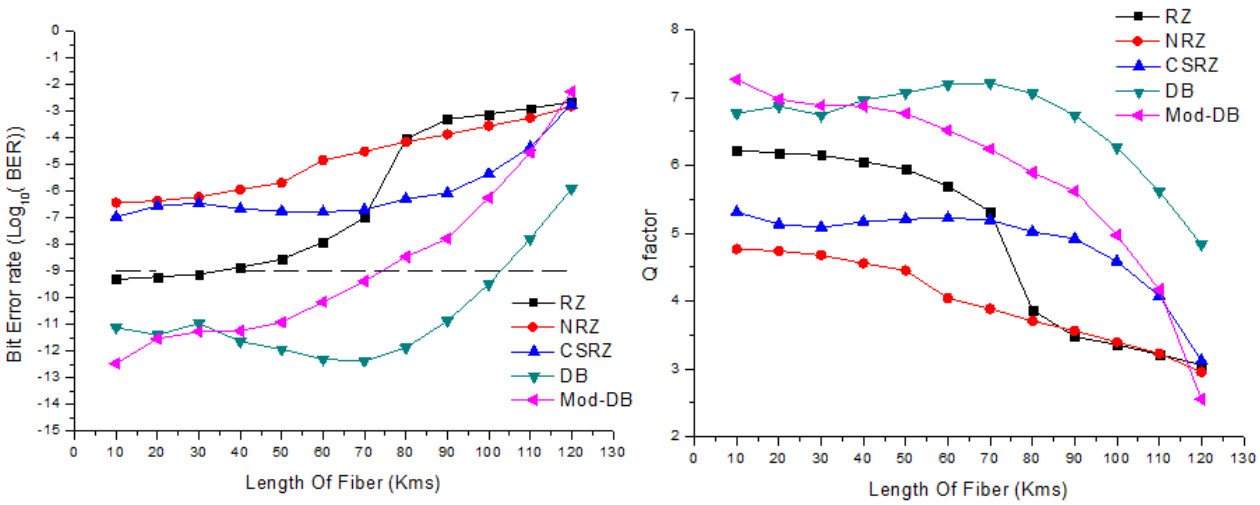

Figure-8. BER performance of RZ, NRZ, CSRZ, DB, Mod-DB modulation formats for various transmission line lengths.

REFERENCES

[1] Oogushi S., Satou S., Saeki N. June 2016. Development of 10G-EPON to better handle increased traffic. NEC Technical Journal. 10(3): 58-61

[2] Michael P. Mcgarry *et al.* 2008. Ethernet passive Optical Network Architectures and Dynamic Bandwidth Allocation Algorithms. IEEE Communications Surveys & Tutorials

[3] Glen Kramer *et al.* 2002. Ethernet Passive Optical Network (EPON): Building a Next-Generation Optical Access Network. IEEE Communications Magazine.

[4] Amitabha Banerjee *et al.* 2005. Wavelength-division-multiplexed passive optical network (WDM-PON) technologies for broadband access: a review [Invited] Journal of optical Networking. 4(11).

[5] K. Grobe and M. Eiselt. 2013. Wavelength Division Multiplexing: A Practical Engineering Guide, Wiley.

[6] Jun-ichi Kani 2010. Enabling Technologies for Future Scalable and Flexible WDM-PON and WDM/TDM-PON Systems. IEEE Journal of Selected Topics in Quantum Electronics. 16(5).

[7] P. J. Winzer, R. Essiambre. 2006. Advanced Optical Modulation Formats. In Proceedings of the IEEE. 94(5): 952-985.

[8] A. García-Pérez *et al.* 2006. Modulation Formats for High Bit-Rate Fiber Transmission. Acta Universitaria. 16(2).

[9] E. Lach, W. Idler. 2011. Modulation formats for 100G and beyond, Optical Fiber Technology. 17: 377-386.

[10] R. Agalliu, M. Luck. 2014. Benefits and Limits of Modulation Formats for Optical Communications, Optics and optoelectronics. 12(2).

[11] R. Hui, *et al*. 2004. Advanced Optical Modulation Formats and Their Comparison in Fiber-Optic Systems. The University of Kansas and Sprint Corporation, USA.

[12] D. Lavery *et al.* 2011. A comparison of modulation formats for passive optical networks. Optics Express, 19: B836- B84.

[13] J. Latal et.al.2014. Simulation of modulation formats for optical access network based on WDM-PON. In Proceedings of 16th International Conference in Transparent Optical Networks (ICTON): 1-7

[14] Inna Kurbatska *et al*. 2016. Performance Comparison of Modulation Formats for 10 Gbit/s WDM-PON Systems. In Proceedings of Wireless and Optical Communications (RTUWO).

[15] Opti System Getting Started -Optical Communication System Design Software, version 12, Optiwave.