VOL. 13, NO. 9, MAY 2018 ISSN 1819-6608
ARPN Journal of Engineering and Applied Sciences

www.arpnjournals.com

DISTRIBUTED GENERATION WITH HIGH VOLTAGE GAIN DC-DC CONVERTER INTEGRATED DVR AS UNINTERRUPTED POWER SUPPLY

Syed Suraya, P. Sujatha and P. Bharat Kumar
Department of Electrical and Electronics Engineering, JNTUA, Anantapur, Andhra Pradesh, India
E-Mail: syedsuraya143@gmail.com

ABSTRACT

This paper presents a dynamic voltage restorer (DVR) providing un-interrupted power supply to the load when distributed generation (DG) is integrated to DVR. When there is an outage in supply to the load from the source, the DG integrated DVR supplies the load providing un-interrupted power supply. Photo-voltaic system is considered to be DG and the low voltage output from PV system is boosted using a high-gain DC-DC converter. DVR is a custom power device used for the compensation of power quality issues. DVR compensates harmonics, sag and swell in load voltage in this paper, also providing uninterrupted power supply to the load when there is an outage in supply to the load from the source. Closed-loop operation of high-gain DC-DC converter for boosting DG output is described. The proposed system is simulated and results are obtained using MATLAB/SIMULINK software.

Keywords: DVR, un-interrupted power supply, sag, swell, harmonics, high-gain, DC-DC converter.

INTRODUCTION

Power industry that includes power generation, transmission and distribution is one of the renowned sectors that almost every country is concerned about. "Country's growth depends on power management", is the caption believed globally. In many of the developed countries though there is no shortage or fluctuations in power, there might be a case of power outage for short duration or long duration due to system faults or environmental conditions which cannot be avoided. This phenomenon of power outage can disturb the load performance and insists for additional device to provide un-interrupted power supply during power outages in source. This paper discusses the concept of uninterrupted power supply delivered to load when there is a discontinuity in source power. Distributed generation (DG) through DVR delivers required load demand when there is no power from source.

Although investment in major capital projects such as generation are sufficiently encouraged, the rate at which these investments are implemented may be mismatched with the power demand growth rate [1]. The other problem with these massive investments is environmental issues. These investments require large areas of land to be cleared. Placing power generating stations right-of-the-way for transmission or distribution lines which generally changes the ecosystem of the places where the investment is going to be located increases transmission losses. To overcome these disadvantages, installation of minor power generation equipment at load facilities in power distribution system called distributed generation (DG) [2-4] which do not need much investment but also can offer environmental, technical and economic assistance can serve the purpose to increase the system performance in power distribution system. Distributed generation generally means more than one power source feeding the same loads including sources at multiple locations but it can also mean stand alone or isolated generation at the point of use [5-6]. Position and sizing of distributed generation can affect the system performance and in order to obtain extent benefits from DG, these parameters should be given utmost priority. Multiple generation sources tied together means that sufficient power can be made available for the entire load where no one generator is sufficient by itself. This allows sufficient redundancy to take units off line for maintenance or where one or more fail and also there can be additional reserve capacity for unexpectedly large loads. PV system is considered to be distributed generation in this paper. PV system output is low voltage and will not be sufficient enough to drive any connected system. The low voltage output from PV system should be boosted to a certain level required for the application. To boost the PV low voltage to required level, high-gain DC-DC converter is employed in this paper.

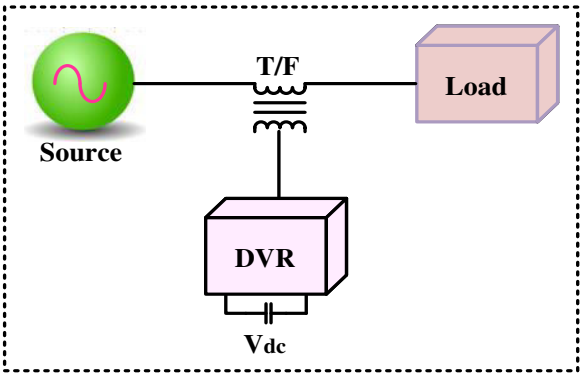

Figure-1. Block diagram of DVR in power system.

Voltage sags and swells are the most common power quality problems in electrical distribution systems. Voltage sag is defined as decrease in the RMS value of voltage magnitude. Voltage swell is defined as increment in the RMS value of voltage magnitude. There are two

types of voltage sag and swell which can occur on any transmission lines; balanced and unbalanced voltage sag and swell which are also known as symmetrical and asymmetrical voltage sag and swell respectively.

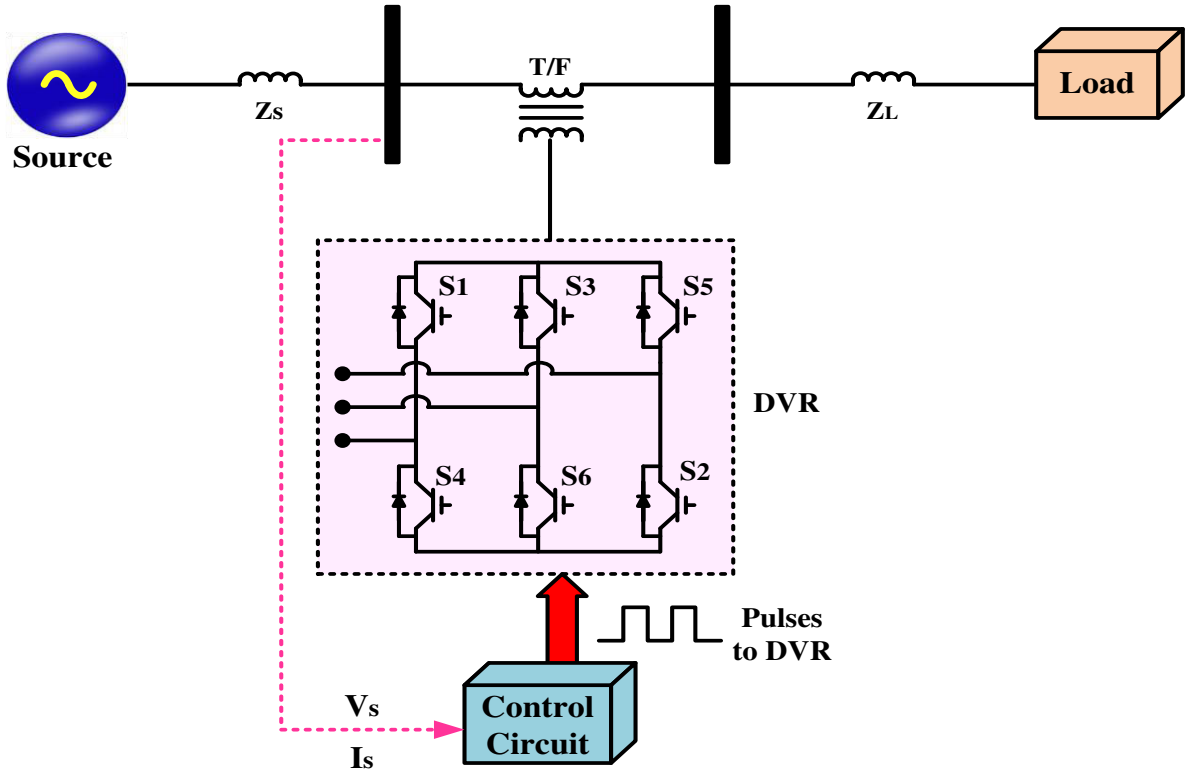

Figure-2. Schematic arrangement of DVR in power system.

General developed and comprehensively used three phase power electronic conversion topologies are highly utilized in various commercial/residential applications for processing the energy levels. Their operating principles are dependent on the high-speed range power switching components in such a way their wave-shapes are characterized so as to engage the power transfer between the two sides. In fact, usage of such high range devices at acute frequencies than the fundamental switching frequency by necessarily originates the undesired harmonized components [1-3]. These harmonized components are annoying the power supplies particularly in responsive electronic loads.For minimization of these harmonized components in three phase distribution systems using several ways. In that, identification of harmonics acts as a primary task and then, compensation takes place as a secondary task. Harmonics can be generated by loads as well as source only or both. Before harmonic compensation, measurement of harmonic is one of the familiar aspects of the power quality monitoring and effective control.

Custom power devices are developed to reduce the power quality problem affecting the power system. Custom power devices like DVR, STATCOM, UPQC are developed according to their particular application for which they are meant to compensate. DVR is a custom power device specially meant to compensate power quality issues like voltage sag, swell and harmonics. DVR is a series compensating device placed in series to power system.DVR [4-6] utilizes the power semiconductor devices so as to compensate voltage sag, swell and also to inject harmonics into the system that may cancel out the harmonics in the supply voltage which is affected by non-linear loads. Typical DVR [7-10] in power system is shown in Figure-1.

This paper presents a dynamic voltage restorer (DVR) providing un-interrupted power supply to the load when distributed generation (DG) is integrated to DVR. When there is an outage in supply to the load from the source, the DG integrated DVR supplies the load providing un-interrupted power supply. Photo-voltaic system is considered to be DG and the low voltage output from PV system is boosted using a high-gain DC-DC converter. DVR is a custom power device used for the compensation of power quality issues. DVR compensates harmonics, sag and swell in load voltage in this paper, also providing uninterrupted power supply to the load when there is an outage in supply to the load from the source. Closed-loop operation of high-gain DC-DC converter for boosting DG output is described. The proposed system is simulated and results are obtained using MATLAB/SIMULINK software.

DVR WITH NORMAL CONTROL

The schematic arrangement of DVR in power system is shown in Figure-2. DVR is a series

compensation device and is placed in series to the power system through coupling transformer. DVR is designed or controlled to compensate the voltage quality issue problems in power system especially sag, swell and harmonics in voltage. A typical DVR consists of power electronics switches with a small DC source typically a small capacitor. DVR is a voltage source converter (VSC) that operates from control signals. The current and voltage signals from line are sensed and sent to control unit. The control unit generates reference signals and when reference signals are passed through a pulse generator produces pulses to power switches in DVR thus sending compensating signals to power system through coupling transformer.

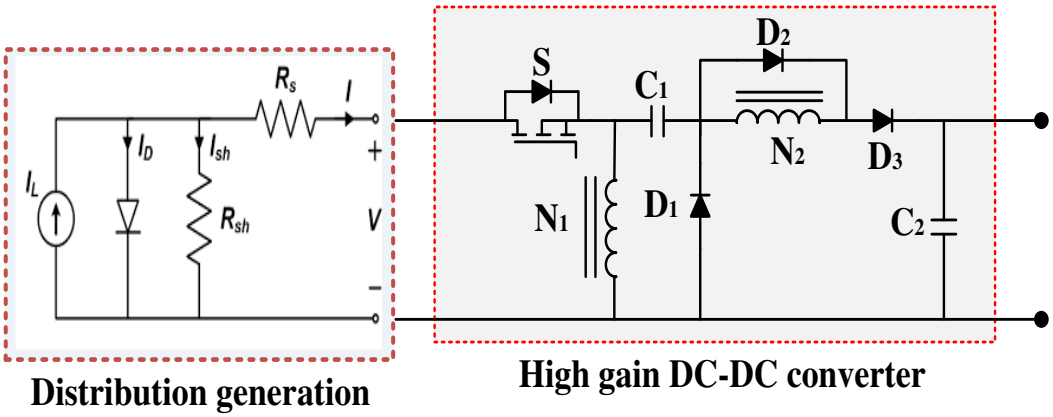

Figure-3. Photo-voltaic system with high-gain DC-DC converter.

PHOTO-VOLTAIC SYSTEM WITH HIGH-GAIN DC-DC CONVERTER

The circuit configuration with PV system and high-gain DC-DC isolated converter is shown in Figure-3. The low voltage DC from PV system is fed to isolated DC-DC converter to boost the level of voltage.

A. DC-DC Converter configuration

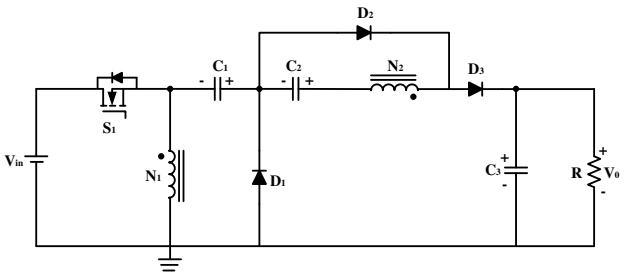

Figure-4. Isolated DC-DC boost converter.

The isolated boost converter circuit configuration is shown in Figure-4.

When switch S is in ON position, the primary inductor gets charged by Vin through switch S1. At the same time the secondary inductor starts discharging and causes to charging the capacitor C2. In this case, capacitor C3 discharges and supplies to load.

When switch S is in OFF position, then the charged primary inductor discharges through diode D1 and capacitor C1. Therefore capacitor C1 gets charges. Mean while the charged capacitor C2 starts discharging and causes to charge the secondary inductor and output capacitor C3.

B. Closed loop configuration of high gain DC-DC converter

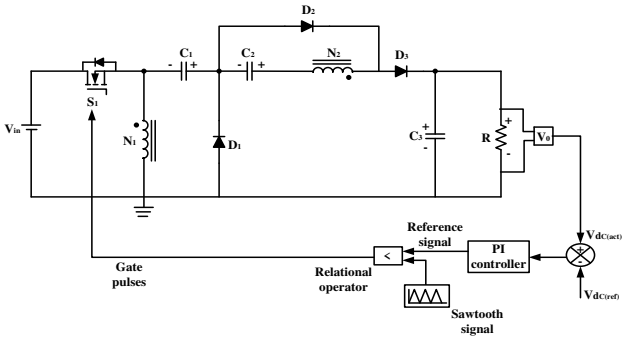

Figure-5. Closed loop isolated boost converter.

The closed loop configuration of the isolated boost converter is shown in Figure-8. In closed loop mode, the output voltage is maintained constant by feedback control. In this, the output DC voltage is sensed and compared with the reference value. The error is given to the PI controller and it generates reference signal. This reference wave is compared to the carrier saw-tooth wave of high frequency and it generates gate pulses for the switch S.

DG INTEGRATED DVR

DG is defined as the integrated or stand-alone use of small, modular electric generation close to the point of consumption. It differs fundamentally from the traditional model of central generation and delivery insofar as it can be located near end-users within an industrial area, inside a building, or in a community. The downstream location of

DG in the power-distribution network provides benefits for both customers and the electric-distribution system.

Renewable energy sources can produce electrical energy locally at the load side which is called as distributed generation (DG). Electrical systems can be broadly classified as grid connected systems and standalone systems. In grid connected system, the power that is generated from DG is fed to grid to feed the grid connected loads. The generated energy is fed to group of loads connected locally to DG system but no power is fed to or from the main grid. This type of standalone systems can decrease the burden on main grid which eventually reduces generation cost.

A photo-voltaic array, wind system, fuel cells, micro turbines, hydro turbines constitutes DG system. The DG system is responsible to feed increased load demand and also meets environmental regulations. The performance of the DG system is mainly based on whether the DG system is coupled with synchronous or induction generators or to power electronic converters. The electric power system interface is the means by which the DG unit electrically connects to the power system outside the facility in which the unit is installed. Depending on the application and operation of the DG unit, this interface can represent a complex parallel interconnection, or can be non-existent if the DG unit is operated in isolation. The complexity of the interface increases with the level of interaction required between the DG unit/owner and the electrical grid/distribution company.

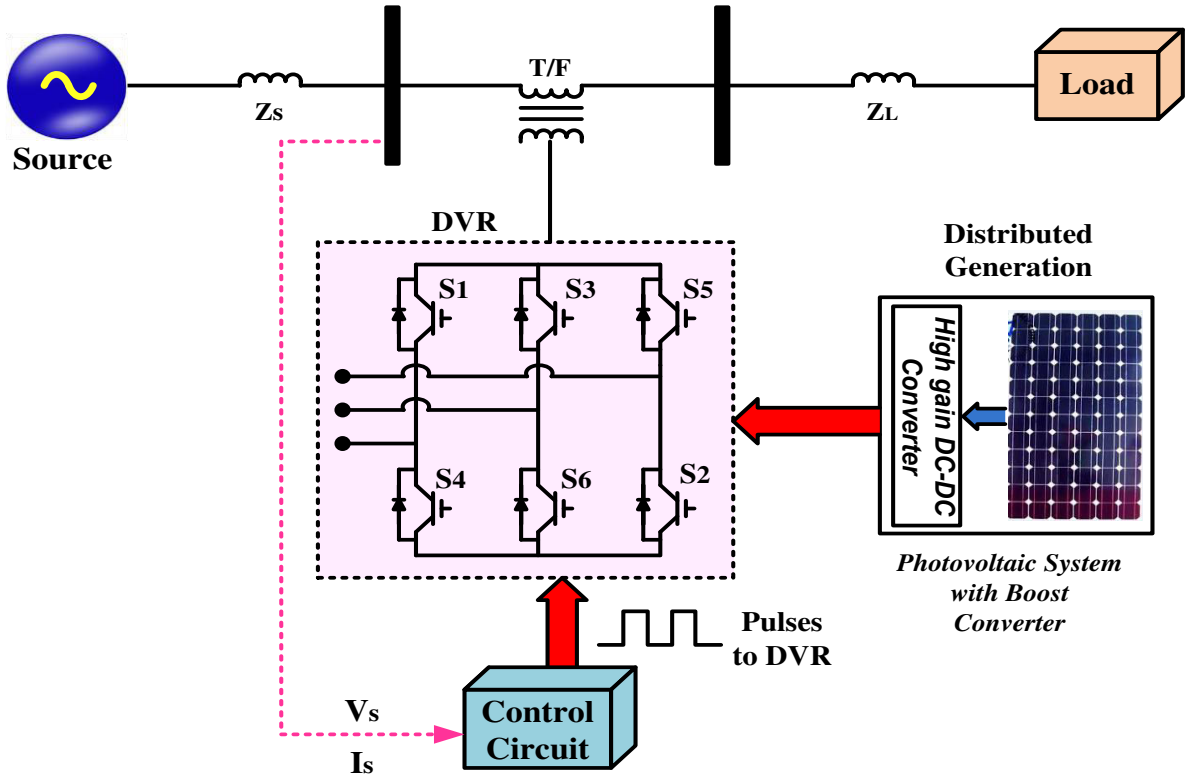

Figure-6. DG integrated DVR connected to power system.

VOL. 13, NO. 9, MAY 2018 ISSN 1819-6608
ARPN Journal of Engineering and Applied Sciences

www.arpnjournals.com

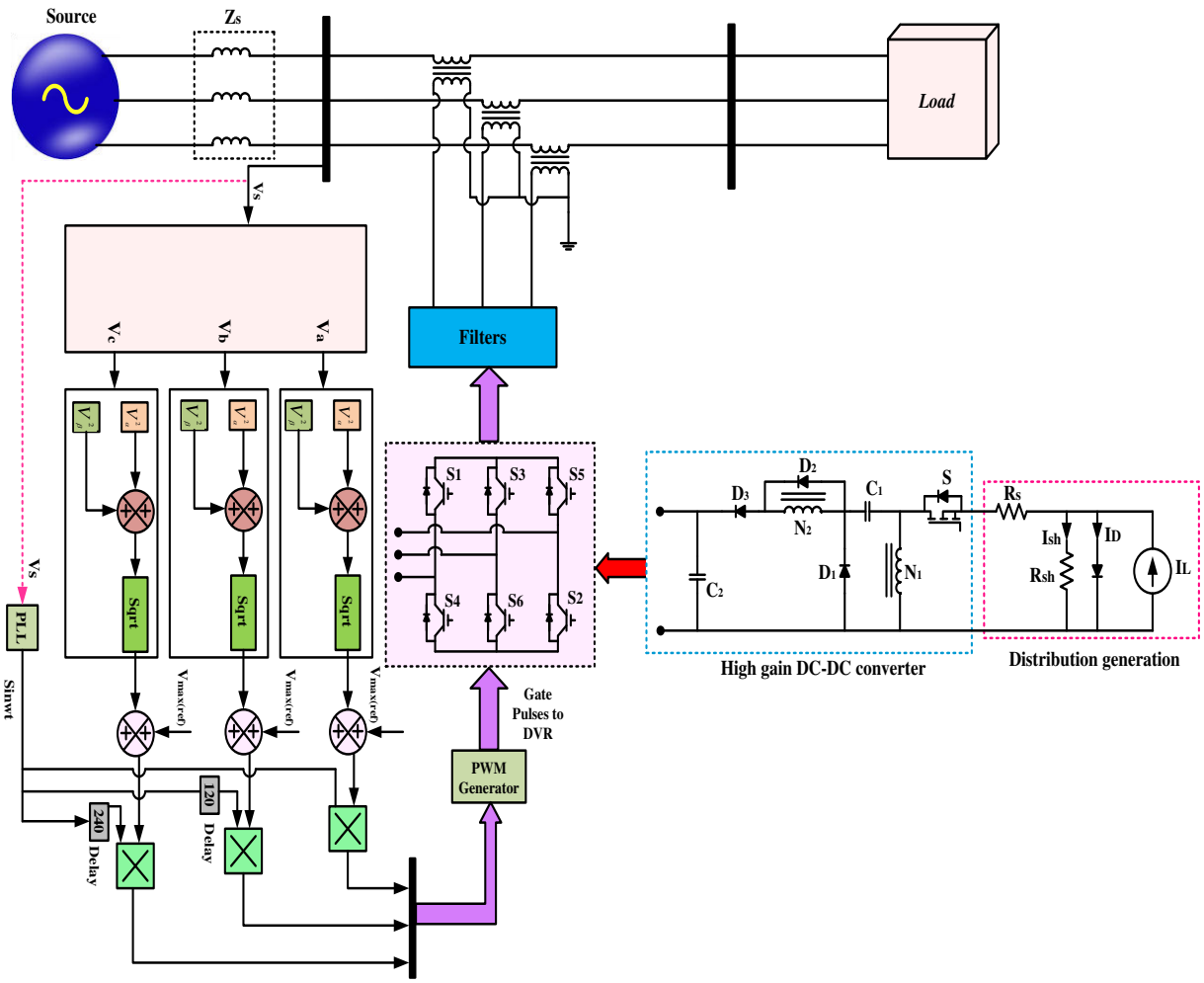

Figure-7. DG integrated DVR connected to power system with control strategy.

DG integrated DVR connected to power system is shown in Figure-6. DG system consisting of PV system withhigh-gain DC-DC converter feeds DVR to provide DC link voltage to DVR. The DC output of DC-DC converter provides DC support for DVR to send compensating signals to power system for voltage and harmonic compensation.

The control strategy along withDG integrated DVR connected to power system is shown in Figure-7.Source voltage is sensed from input source bus and information regarding Va, Vb and Vc are obtained from source voltage Vs. From phase-A, i.e., from Va, signal Vα is obtained. By delaying Vα signal by 90^0 yields Vβ signal. From the obtained Vα and Vβ signals, $V^2\alpha$ and $V^2\beta$ are obtained and both are added. Applying square root to obtained signal ($V^2\alpha + V^2\beta$) yields actual maximum value of voltage. This actual value is compared with reference signal and is multiplied with signal shape obtained from phase locked loop. Similar process is carried out for remaining two phases Vb and Vc. The shape of the waveform is delayed by 120^0 and 240^0 respectively for phase-B and phase-C. The final signals of three phases are sent to PWM generator to produce pulses to switches in DVR.

RESULTS AND DISCUSSIONS

Case-1: DG integrated DVR for sag compensation

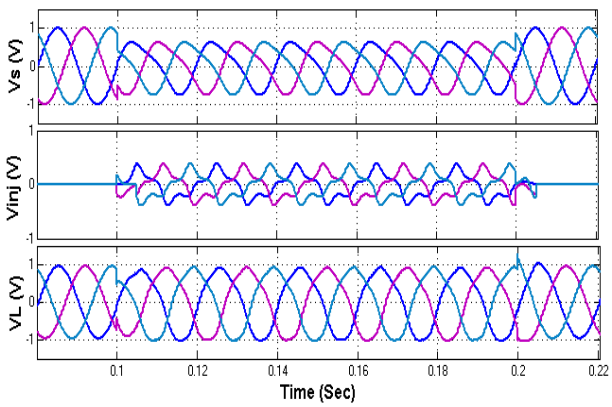

Figure-8. Three-phase source voltage, DVR injected voltage and Load voltage.

Three-phase source voltage with sag, DVR injected voltage and load voltage is shown in Figure-8. Sag is present in source voltage from duration 0.1 sec to 0.2 sec. During the sag period in source voltage, DG

VOL. 13, NO. 9, MAY 2018 ISSN 1819-6608
ARPN Journal of Engineering and Applied Sciences

integrated DVR injects compensating voltages and thus load voltage is maintained with constant amplitude as shown in Figure-8.

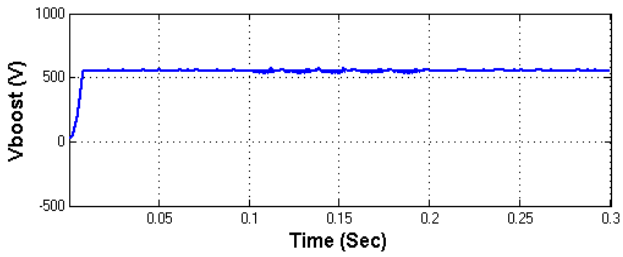

Figure-9. Boost converter output voltage.

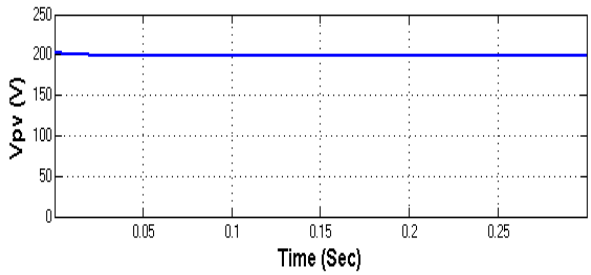

Figure-10. PV output voltage.

The boost converter output and the PV system output voltage are shown in Figure-9 and Figure-10 respectively. The PV output of 200 V is boosted to 550 V by using boost converter as shown in their respective Figures.

Case-2: DG integrated DVR for sag and harmonic compensation

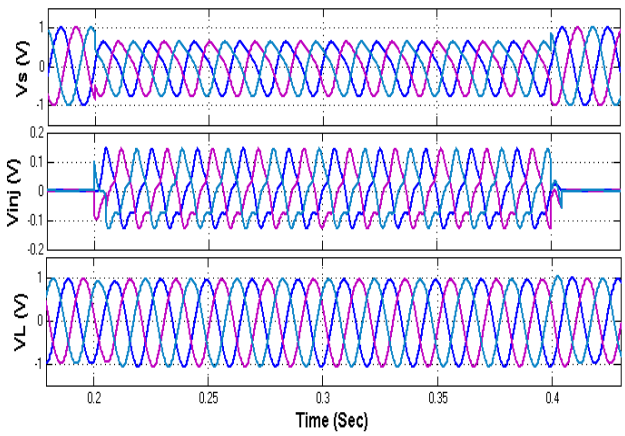

Figure-11. Source voltage, DVR injected voltage and Load voltage.

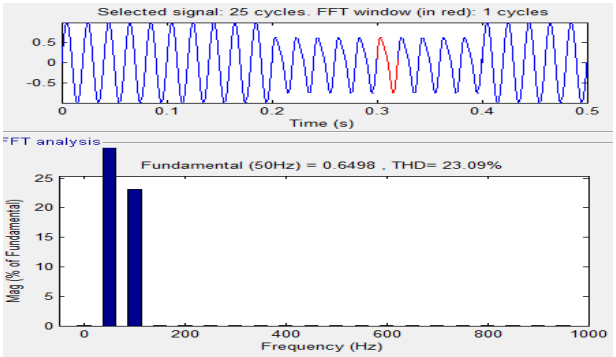

Figure-12. Source voltage THD during sag.

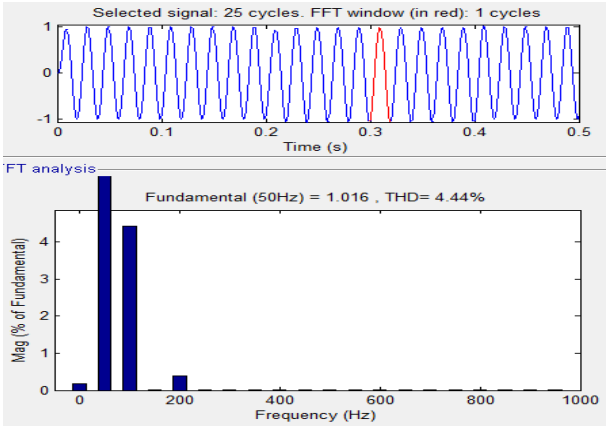

Figure-13. Load voltage THD after compensation.

Figure-11 shows the source voltage containing sag and harmonics, DVR injected voltage and load voltage after compensation. Sag is present in source voltage from 0.2 sec to 0.4 sec also containing harmonics. DG integrated DVR injected voltage and compensates the sag so that sag is not appeared in load voltage thus maintaining load voltage profile constant peak amplitude. Harmonic THD of 23.09% is present in source voltage during sag condition as shown in figure 12. DVR compensates harmonics with THD of 4.44% in load voltage profile and is well maintained within nominal limit as shown in Figure-13.

Case-3: DG integrated DVR for swell compensation

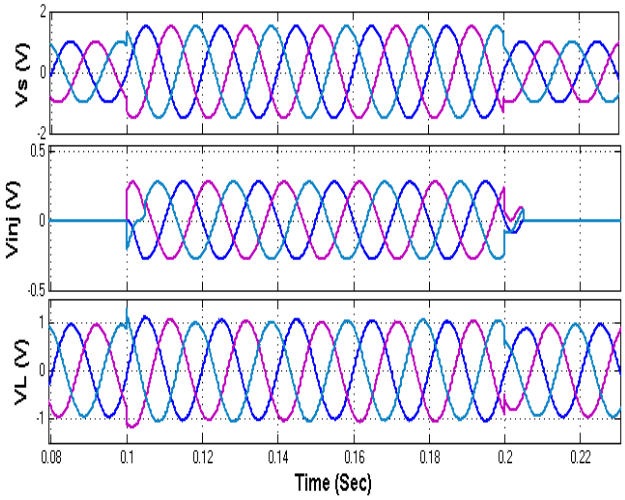

Figure-14. Source voltage, DVR injected voltage and Load voltage during swell compensation.

Three-phase source voltage with swell, DVR injected voltage and load voltage is shown in Figure-14. Swell is present in source voltage from duration 0.1 sec to 0.2 sec. During the swell period in source voltage, DG integrated DVR injects compensating voltages and thus load voltage is maintained with constant amplitude of 1 P.U as shown in Figure-14.

Case-4: DG integrated DVR for swell and harmonic compensation

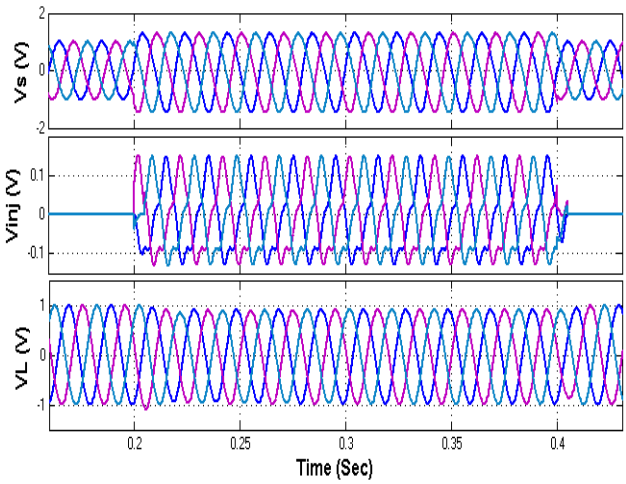

Figure-15. Source voltage, DVR injected voltage and Load voltage during swell and harmonic compensation.

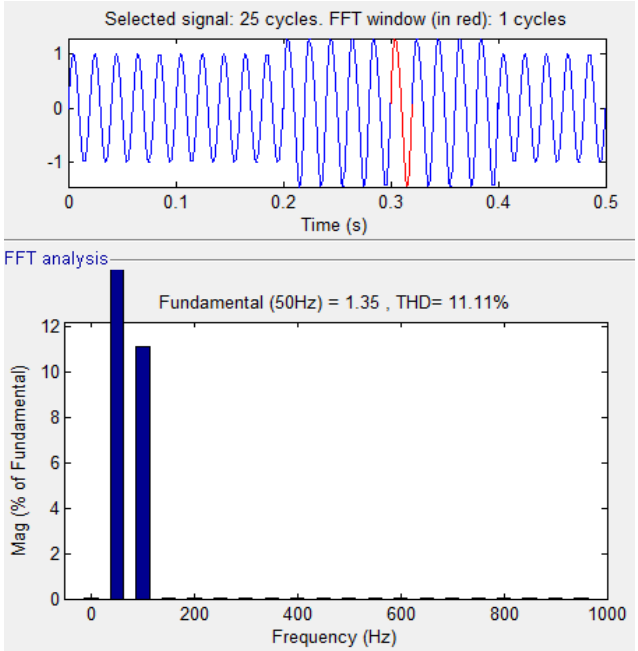

Figure-16. Source voltage THD.

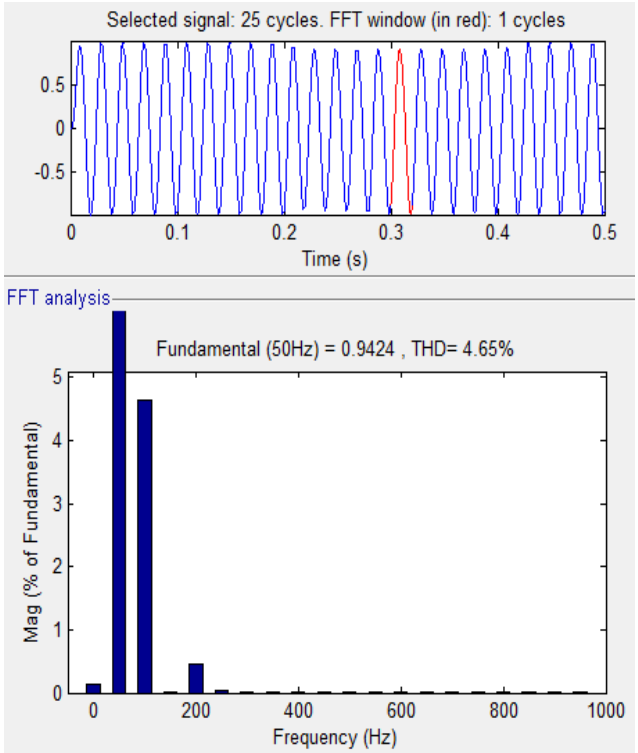

Figure-17. Load voltage THD.

Figure-15 shows the source voltage containing swell and harmonics, DVR injected voltage and load voltage after compensation. Swell is present in source voltage from 0.2 sec to 0.4 sec also containing harmonics. DG integrated DVR injected voltage and compensates the swell so that swell is not appeared in load voltage thus maintaining load voltage profile constant peak amplitude. Harmonic THD of 11.11% is present in source voltage during swell condition as shown in Figure-16. DVR

VOL. 13, NO. 9, MAY 2018 ISSN 1819-6608
ARPN Journal of Engineering and Applied Sciences

compensates harmonics with THD of 4.65% in load voltage profile and is well maintained within nominal limit as shown in Figure-17.

Case-5:DG integrated DVR for sag and swell compensation

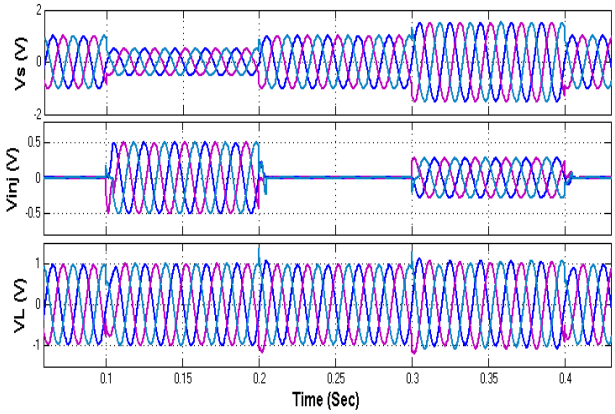

Figure-18. Source voltage, DVR injected voltage and Load voltage during sag and swell compensation.

Figure-18 shows the Source voltage, DVR injected voltage and Load voltage during sag and swell compensation. Source voltage contains sag from duration 0.1 sec to 0.2 sec. After 0.2 sec, source voltage restores to normal value. From 0.2 to 0.4 sec, source voltage contains voltage swell. DVR injects compensation signals from 0.1 to 0.2 sec to compensate for voltage sag and injects compensation signals from 0.2 to 0.4 sec to compensate for voltage swell. Load voltage is maintained at constant voltage profile with no sag and swell.

Case-6: DG integrated DVR as uninterrupted power supply

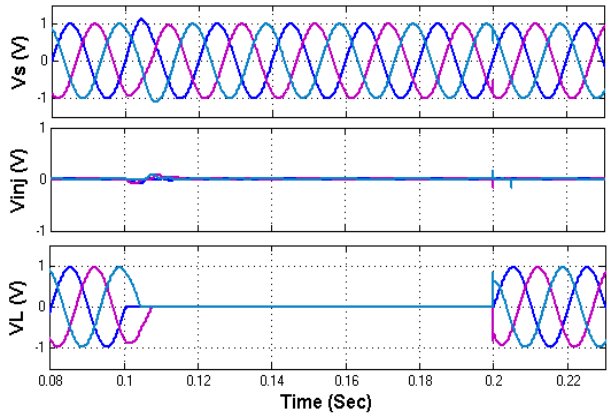

Figure-19. Source voltage, Injected voltage and load voltage with voltage black-out and no DVR and DG.

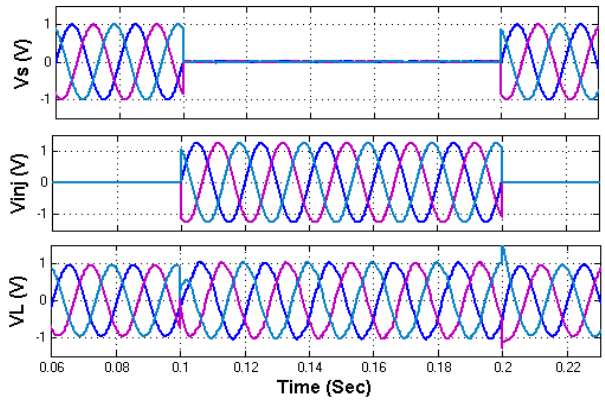

Figure-20. Source voltage, Injected voltage and load voltage with voltage black-out and DG connected DVR.

Source voltage, Injected voltage and load voltage with voltage black-out and no DVR and DG are shown in Figure-19. DG when not connected to DVR does not produce any active power to power system and during black-out period in load voltage due to load fault as shown in Figure-19, load voltage is interrupted.

Source voltage, Injected voltage and load voltage with voltage black-out in source voltage and DVR withDG connected are shown in Figure-20. During black-out period from 0.1 sec to 0.2 sec in source voltage as shown in Figure-20, load voltage is uninterrupted as DG connected to DVR feeds active power and thus load voltage is uninterrupted providing uninterrupted power supply supplying voltage to load section.

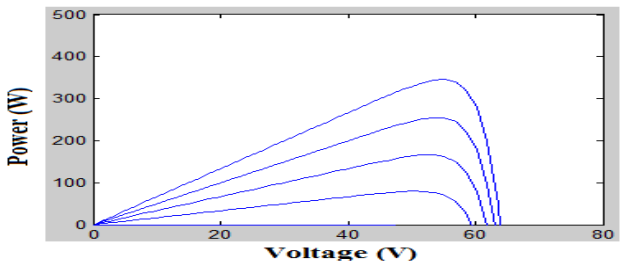

Figure-21. PV Power.

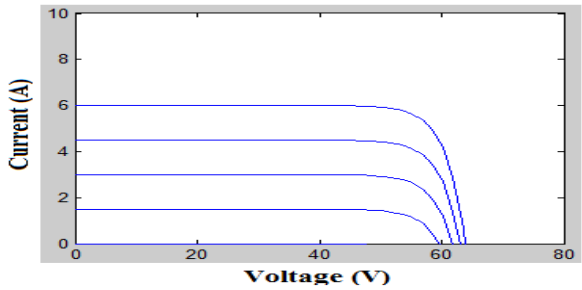

Figure-22. I-V characteristics.

Power-Voltage (P-V) characteristics of photovoltaic system are shown in Figure-21 and current-voltage (I-V) characteristics of photovoltaic system are shown in Figure-22.

CONCLUSIONS

The Distributed generation (DG) integrated DVR for voltage quality improvement is presented in this paper with voltage sag, swell and harmonic compensation. DG connected DVR to provide uninterrupted power supply for giving continuous supply voltage to load is presented. PV system is considered as DG and output of PV system is boosted to required level using high-gain DC-DC boost converter. DG integrated DVR is tested for cases like presence of only sag in source voltage and its compensation in load voltage. Similarly DG integrated DVR is tested for only swell condition and its compensation, sag and harmonics, swell and harmonic conditions. THD is well maintained within nominal limits during harmonic compensation and load voltage is maintained with constant peak in all the conditions. PV characteristics were also shown. DG integrated DVR compensates harmonics, sag and swell in load voltage in this paper, also providing uninterrupted power supply to the load when there is an outage in supply to the load from the source. Closed-loop operation of high-gain DC-DC converter for boosting DG output is described.

REFERENCES

[1] Sannino, G. Michelle and M. Bollen. 2000. Overview of Voltage Sag Mitigation. IEEE Power Engineering Society 2000 Winter Meeting. 4: 23-27.

[2] Trevor L. Grant and Deepak M. Divan. 2002. Power Quality Solutions to Mitigate the Impact of Voltage Sags in Manufacturing Facilities. AEE-WEEC.

[3] C. S. Chang, Y.S. Ho and P.C. Loh. 2000. Voltage Quality Enhancement with Power Electronics Based Devices. IEEE.

[4] Benachaiba and B. Ferdi. 2009. Power Quality Improvement Using DVR. American Journal of Applied Sciences.

[5] H. Ezoji, A. Sheikholeslami, M. Tabasi and M.M. Saeednia. 2009. Simulation of Dynamic Voltage Restorer Using Hysteresis Voltage Control. European Journal of Scientific Research ISSN 1450-216X, 27(1): 152-166.

[6] Stefan Molokáč, Ladislav Grega and Pavol Rybár. 2007. Using MRI Devices forthe Energy Storage Purposes. Acta MontanisticaSlovacaRočník12, mimoriadnečíslo. 2, pp.278-284.

[7] R. Akkaya and A. A. Kulaksiz. 2004. A Microcontroller-Based Stand-Alone Photovoltaic Power System for Residential Appliances. Applied Energy. 78, pp. 419-431.

[8] G. Ramya, V. Ganapathy, P. Suresh. 2017. Power Quality Improvement Using Multi-Level Inverter Based DVR and DSTATCOM Using Neuro-Fuzzy Controller. International journal of power electronics and drive systems (IJPEDS). 8(1):316-324.

[9] Brahim Ferdi, Samira Dib, Brahim Berbaoui, Rachid Dehini. 2014. Design and Simulation of Dynamic Voltage Restorer Based on Fuzzy Controller Optimized by ANFIS. International journal of power electronics and drive systems (IJPEDS). 4(2):212-222.

[10] D.K. Tanti, M.K. Verma, Brijesh Singh, O.N. Mehrotra. 2012. Optimal Placement of Custom Power Devices in Power System Network to Mitigate Voltage Sag under Faults. International journal of power electronics and drive systems (IJPEDS). 2(3):267-276.