VOL. 13, NO. 10, MAY 2018 ISSN 1819-6608
ARPN Journal of Engineering and Applied Sciences
©2006-2018 Asian Research Publishing Network (ARPN). All rights reserved.
www.arpnjournals.com

THEORETICAL STUDIES OF THE DAMAGE PROCESS OF EASILY DAMAGED PRODUCTS IN TRANSPORT VEHICLE BODY DURING THE ON-FARM TRANSPORTATION

N. V. Byshov[1], S. N. Borychev[1], D. E. Kashirin[1], G. D. Kokorev[1], M. Yu. Kostenko[1], G. K. Rembalovich[1], A. A. Simdyankin[1], I. A. Uspensky[1], A. I. Ryadnov[2], R. A. Kosul'nikov[2], A. V. Shemyakin[1], I. A. Yukhin[1] and I. K. Danilov[1]
[1]Ryazan State Agro-technological University Named after P. A. Kostychev, Ryazan, Russia
[2]Volgograd State Agrarian University, Volgograd, Russia
E-Mail: fsd_58@mail.ru

ABSTRACT

The purpose of the study is damage reduction of easily damaged products in transport vehicle body in various ways of its placement (embankment, in containers) during the on-farm transportation through the development of new scientifically grounded technical solutions. The methods of the study are performing theoretical studies on the basis of regulations, laws and methods of theoretical mechanics and mathematical analysis with computers using, including using the program MathCAD 14.0 and package application software LabView. The article presents the results of realized theoretical studies about the analysis of damage process of easily damageable agricultural products in transport vehicle body during the on-farm transportation, which prove that the maximum speed of the vehicle on the field and in gardens with slopes of up to 9º (with gradients up to 9), in which product damage in the containers (during transport of apples no more than 5%) and in the vehicle body during on-farm potatoes embankment transportation (no more than 4%) do not exceed agronomic requirements is for a vehicle with body stabilization devices 23.9 kilometers per hour and 24.6 kilometers per hour respectively, that is 1.2-1.22 times greater than the base variant trailer - 19.9 kilometers per hour and 20.1 kilometers per hour. The containers that proposed according to the results of the research contribute to the reduction of product's damage during its transportation by increasing contact area of the fruit and container and by reducing the space for the free movement of products.

Keywords: damage process, easily damaged products, on-farm transportation, transport vehicle, container.

INTRODUCTION

It is one of the most important and difficult tasks to prevent damage and loss of agricultural production, with very important role of cars and tractor transport as the most important links of the agro-industrial complex of the Russian Federation. Analysis of information about the harvest and on-farm transportation of easily damaged products shows that more than 15-20% of production does not reach the consumer. Delays in loading and unloading are up to 50% of the time of stay of vehicles in the order that has a negative on the safety of products. Annual damages of agricultural production losses are about 8 billion rubles. Transport costs in the cost price of produced rural products make up 30-40% or more. The transport costs reduction will additionally allow to direct substantial funds for the development of the agricultural sector. Increasing of harvest terms leads to higher losses and damage. Therefore, increasing of on-farm transportation productivity is required because delaying harvest leads to work at air temperatures less than 5-7 ºC, which is one of the main reasons for the losses and damages [1].

Thus, the creation of new science-based solutions in the vehicle construction for on-farm transportation, which increase the safety and harvesting productivity of easily damaged products in conditions of Russian Federation agricultural sector, is actual scientific and technical problem, so its solution makes a significant contribution to the development of the state and contributes to the realization of profitable competitive production.

The purpose of the study is damage reduction of easily damageable products in transport vehicle body in various ways of its placement (embankment, in containers) during the on-farm transportation through the development of new scientifically grounded technical solutions.

MATERIALS AND METHODS

A variety of technologies of agricultural products production is growing, so the number of used species, types of machinery and equipment which are created on the basis of modern materials and a wide range of completing products increases, that is due to the widening and deepening of the studies of agricultural crops, its fruit's properties and features of growing conditions and because of the increasing of agricultural machinery use [2, 3, 4, 5].

The most difficult issue in maintaining the quality of the delicate agricultural products is damages, which spoil its exterior, reduce the category and increase the risk of its contamination. Spoiled products increase the total overall ecological contamination, because it is necessary to dispose of such products because of the poisoning possibility, so this increases the medical care costs and consequently increases the burden on the state economy as a whole. Thus, damage and subsequent contamination damage of delicate agricultural production are critical to both the ecological and food safety [6, 7].

ARPN Journal of Engineering and Applied Sciences
©2006-2018 Asian Research Publishing Network (ARPN). All rights reserved.

Conditions of transportation particularly affect to the product's quality [1]. It is necessary to consider the following features of fruits and vegetables during the transportation realization by automobile and tractor vehicle: an obvious seasonality of production and billet (25% of vegetables are implemented in the first year half and other 75% - in the second year half); uneven ripening and the need for multiple harvesting on the same fields and plantations during the fruiting; the necessity of urgent export of crops from the fields and plantations after harvesting; the use of different delivery schemes according to the product's purpose [8].

Timely shipment and export from the field also affect to the safety of the products. Usually natural climatic conditions during harvest are unfavorable for product's storage and transport. The preparation of cargo for transportation and further storage is the particular importance with timely shipment. For example, the experience in transportation of fruits and vegetables in California shows that pre-sorting of fruits and vegetables in the field with the aim to remove rotten products and gives the opportunity to improve significantly the quality of the delivery [9, 10, 11].

Mainly two components affect to the damage of transported products (Figure-1, Figure-2):

- characteristics of the cargo and the transport vehicle (TV) (physical and mechanical properties of the transported production, the packing and packaging method, the type of the vehicle body;
- indicators, characterizing the smoothness of the vehicle moving (the amplitude, the frequency, speed and the vibration acceleration of the loading platform of the vehicle and the cargo).

Another feature of agricultural product transportation is insufficient use of load-carrying capacity of the vehicle because of the low volumetric mass of transported products. The shakes number of the cargo bulk have increased significantly from the effect of large vibration acceleration and this leads to an increase of the level of the product's damage (Figure-1).

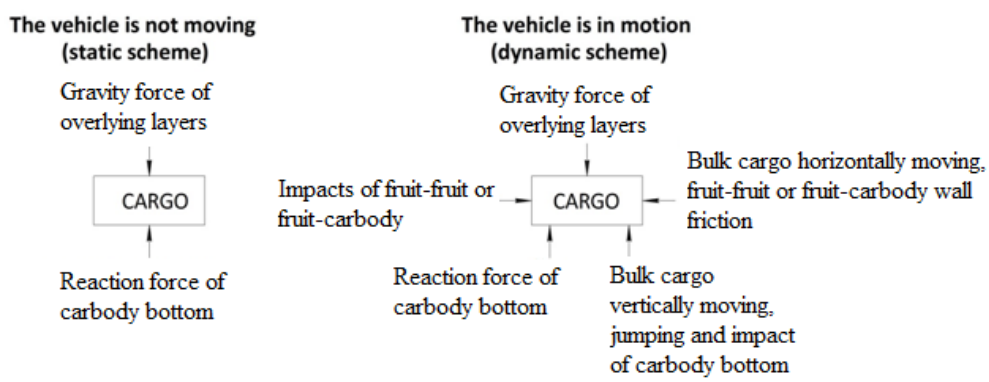

Figure-1. Physical and mechanical model of physical impacts on the transported cargo.

Cargo's damages during transportation are due to some factors, and the main factor is acceleration which acts on the product while the vehicle is moving. So the one of the main operational requirements placed on modern vehicle for ensuring the safety of the cargo is to maximize the smoothness of the vehicle movement (Figure-2).

The research methods are theoretical studies, presented in the article, made on the basis of the regulations, laws and methods of theoretical mechanics and mathematical analysis with computers, including using the program MathCAD 14.0 and package application software LabView.

RESULTS

It is known that tractor transport unit makes the following types of motion [1] during on-farm transportation, influencing on the level of transported production damage: linear movement of the transport unit in the direction, that is perpendicular to the surface of the field (jumping) - Z_k; linear movement of the transport unit down the hill (the tilt) - Y_k; linear movement of the transport unit in the direction, that is parallel to the surface of the field (braking) - X_κ; the rotation of the transport unit around the axis, that is perpendicular to the surface of the hill (wagging) - φ; the turn of the transport vehicle around the transverse axis (galloping) - ψ; the turn of the transport vehicle around the longitudinal axis (wiggle) - θ.

Its motion is described by a system of differential equations, and the second kind Lagrange equation was used for its making-up:

$$Q_{qi} = \frac{d}{dt}\left(\frac{\partial T}{\partial \dot{q}_i}\right) - \frac{\partial T}{\partial q_i} - \frac{\partial P}{\partial q_i} + \frac{\partial R}{\partial \dot{q}_i}, \quad (1)$$

Where

Q_{qi} - is the generalized force corresponding to generalized coordinate, N;

T - the kinetic energy of the system, J;

$Q_i = \frac{\partial P}{\partial q_i}$ - generalized force from forces with the potential and acting on the system (the force of gravity, the elastic force), N;

ARPN Journal of Engineering and Applied Sciences
©2006-2018 Asian Research Publishing Network (ARPN). All rights reserved.

P - potential energy, J;

$R = \frac{1}{2}\beta_r \cdot \dot{q}_i^2$ - dissipative function (Rayleigh function), $\frac{N \cdot m}{s}$;

β_r - the coefficient of resistance damping, $\frac{N}{m}$;

q_i - generalized coordinate, m;

$\dot{q}_i$ - generalized speed, m/s.

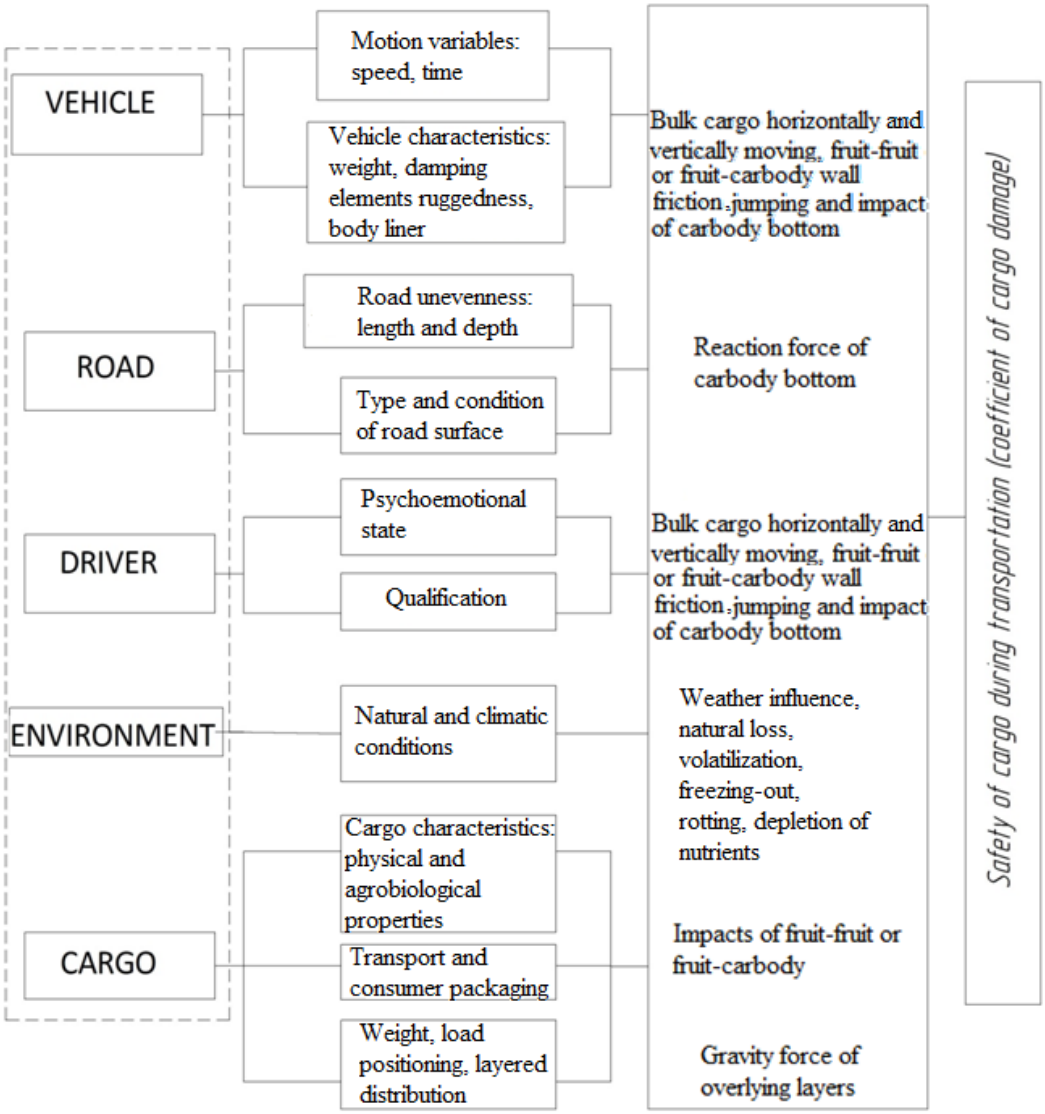

Figure-2. The model of the cargo damages in transit [1].

As can be seen from mathematical expression (1), it is necessary to determine the tractor transport unit potential and kinetic energy for making-up the Lagrange equation, to determine the Rayleigh function and generalized forces values, which correspond to the selected generalized coordinates.

Dependences of the speed variations amplitude with generalized coordinates Y_k, Z_k, θ, ψ и φ and undisturbed motion are built as a result of definition of each second kind Lagrange equation part by using the MathCAD 14 computer program and solving received differential equations, which describe the process of agricultural cargoes damages during on-farm transportation by tractor transport unit according to the 4th order fixed step method of Runge-Kutta (first time with zero initial conditions and second time with nonzero initial conditions (disturbed motion) (Figure-3).

©2006-2018 Asian Research Publishing Network (ARPN). All rights reserved.

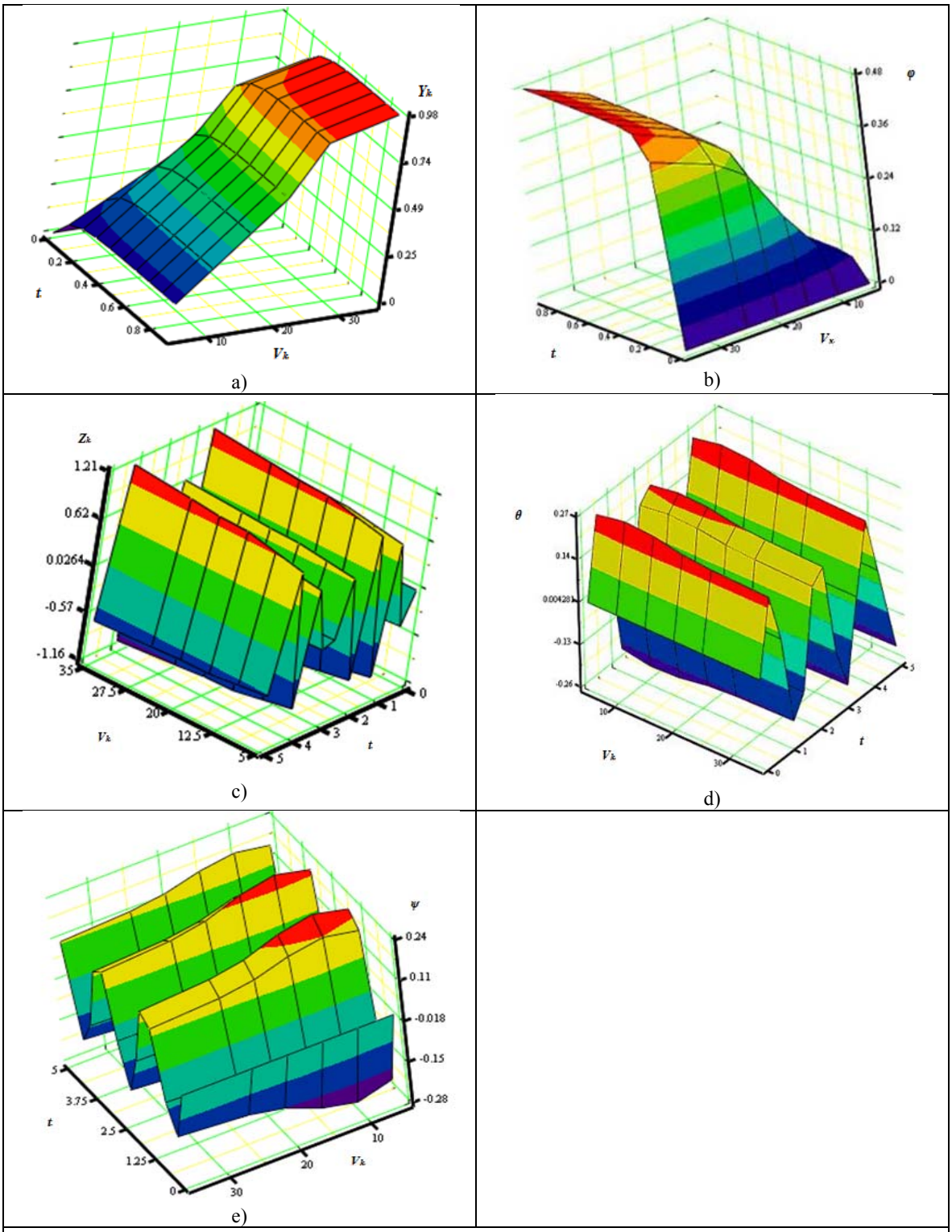

Figure-3. Dependence of the speed variations amplitude of tractor transport unit cargo platform V_k (km/h) on time and motion speed with generalized coordinates: a) with generalized coordinate Y_k (m/s); b) with generalized coordinate φ (rad/s); c) with generalized coordinate Z_k (m/s); d) with generalized coordinate θ (rad/s); e) with generalized coordinate ψ (rad/s).

©2006-2018 Asian Research Publishing Network (ARPN). All rights reserved.

The speed of fluctuations in the loading platform parts, where damages will be maximum, can be determined from the mathematical expression:

$$V_{lp} = \sqrt{\left(\dot{X}_k - \dot{\varphi} Y' + \dot{\psi} Z'\right)^2 + (\dot{Y}_k + \dot{\varphi} X' - \dot{\theta} Z')^2 + (\dot{Z}_k - \dot{\psi} X' + \dot{\theta} Y')^2} \quad (2)$$

Where

$\dot{X}_k$, $\dot{Y}_k$, $\dot{\varphi}$, $\dot{\theta}$, $\dot{Z}_k$ and $\dot{\psi}$ - motion speeds with generalized coordinates X_k, Y_k, φ, θ, Z_k and ψ respectively.

The calculation according to mathematical expression (2) shown that the share of horizontal and longitudinal (which can reach 5-15% of the vertical fluctuation speed by rapid starting) components of speed amplitude of loading platform points, which are the most remote from the mass center with the surface slope angle more 6º is up to 70-85% of the vertical fluctuation speed (Table-1).

These theoretical calculations are given in table, based on the fact that the share of speed amplitude horizontal component of the most remote from loading platform mass center points with the surface slope angle more 6º is up to 70% from vertical fluctuation speed, and longitudinal component is equal to zero according to the admissions which is adopted in theoretical studies.

Table-1. Percentage wise distribution of vertical and horizontal components (without longitudinal-axis component) of general vibration speed of the tractor vehicle body with the body stabilization device during on-farm transportation.

Speed of the machine-tractor aggregate with the device to stabilize the flatbed, km/h	Vertical component			Horizontal component		
	Z_k, %	ψ, %	θ, %	Y_k, %	φ, %	θ, %
5	51.6	4.2	3	30	5.2	6
10	51.8	3.7	3.3	30.1	5.5	5.5
15	51.2	4.8	2.8	30.3	5.6	5.3
20	52	3.9	2.9	30.6	5.6	5
25	51.8	4	3	30.6	6	4.6

As a theoretical research result, it is established that the maximum speed of the vehicle on the field and in gardens with slopes of up to 9º (with gradients up to 9), in which product damage in the containers (during transport of apples no more than 5%) and in the vehicle body during on-farm potatoes embankment transportation (no more than 4%) do not exceed agronomic requirements is for a vehicle with body stabilize devices 23.9 kilometers per hour and 24.6 kilometers per hour respectively, that is 1.2-1.22 times greater than the base variant trailer - 19.9 kilometers per hour and 20.1 kilometers per hour.

DISCUSSIONS

The data which are obtained as a result of the research, that are presented in the works [1, 8] on the basis of analysis, discussion and testing in the leading agricultural universities and scientific research institutes of Russia and Belarus, led to the creation of a number of promising technical and technological solutions (The patent 2519304 RF, that is published 10.06.2014, bulletin № 16; The patent 167067 RF, that is published 20.12.2016, bulletin № 35; The patent 154410 RF, that is published 20.08.2015, bulletin № 23; The patent 2532829 RF, that is published 10.11.2014, bulletin № 31) [12].

Theoretical and field studies of the effectiveness of some devices is already carried out [1], and some devices currently are under study. It is developed the next device (The patent 2532829 RF, that is published 10.11.2014, bulletin № 31) for the aim to reduce damages of delicate easily damageable agricultural production (for example apples), that transported in containers, which are placed at the vehicle body [12] (Figure-4), where container 1 is filled with products 2 and covered with a cover 3, that has a cellular surface: the surface A is designed for large fruits and the surface B - for small fruits. There are holes 4 with rubber harnesses 5 in the cover 3, which end rings 6 designed for mounting on angle-shaped pins 7 of the container 1 (Figure-5). Pins 7 are installed on the side surfaces of the container 1 under the holes 4 of cover 3 by some horizontal rows under each other the entire of the container 1, that gives the opportunity to carry out tensioning of harnesses 5 when the cover 3 is closed, throwing rings 6 from the pins 7 of one row to another (Figure-6).

©2006-2018 Asian Research Publishing Network (ARPN). All rights reserved.

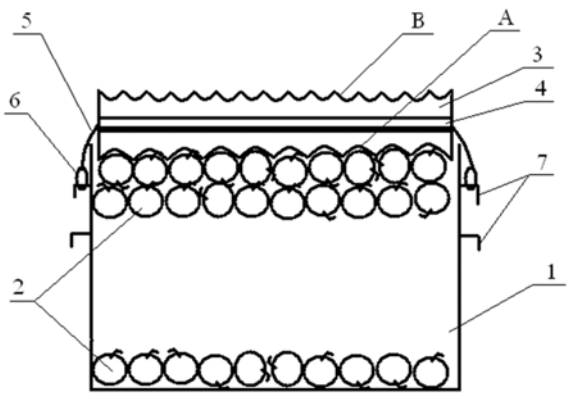

Figure-4. Overview of the device (container) for damageable agricultural products transportation: 1 - container: 2 - fruit; 3 - cover (A - cellular surface, B - fine-meshed surface); 4 - hole; 5 - rubber harnesses; 6 - rings: 7 - pins.

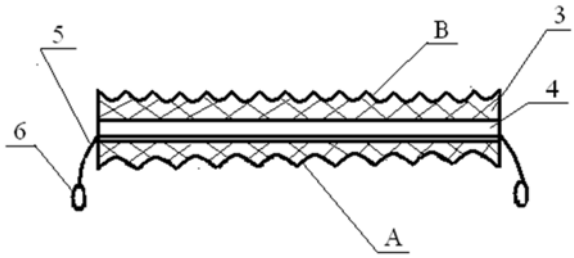

Figure-5. Cut away side view of the cover (the same keys).

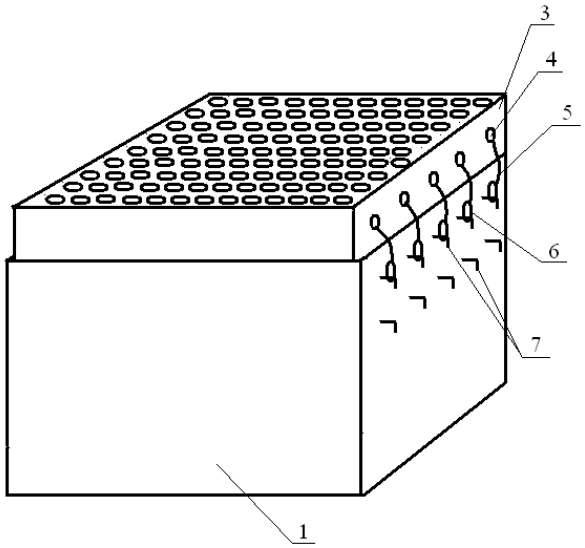

Figure-6. The device elevation (the same keys).

The controllable tensioning of harnesses 5 gives the opportunity to carry out the transportation of fruits 2 both in incomplete (at the height of the cover 3) container filling 1, and depending on irregularities in the road during the transportation.

The device (container) works in the following way (see Figure-4): products 2 loaded in the container 1. The cover 3 covers it by the side A or the side B, according to fruits size, because a large cell is used for a large fruit (side A) and a small cell - for small fruit (side B). Cell surfaces A and B of cover 3 cover fruits 2 tightly because of cover's material elasticity that may be made of foam rubber. Rings 6 of harnesses 5 located in the cover 3 holes 4, on one side of the container 1, are mounted to angle-shaped pins 7, which are fixed on the outer surface of container 1.

After that rings 6 of harnesses 5 are mounted on angle-shaped pins 7 of one of the rows of the opposite container's side thus to make the tubing's 5 tensions preventing product's movement in container 1 during its transportation. The tension of harnesses 5 may be increased by mounting the rings 6 to the lower row of tubings 7 when the container 1 is not fully filled (but no more than the height of the cover 3), or when the road is bad. The unloading is carried out in reverse order: rings 6 of harnesses 5 are removed from pins 7 on the one side of the container 1 and the cover 3 are removed or opened for unloading the container 1.

The technical result from the use of the device (the container) is reduction of product's damage during its transportation by increasing contact area of the fruit and container and by reducing the space for the free movement of products. The use of a non-rigid cover material, for example foam or rubber and elastic rubber harnesses of the clamping mechanism with controlled tension (depending on the pins attachment points on the container) gives the opportunity to achieve the required compaction of the cargo, which does not allow its elements to move inside the container during the transportation, including one fetus relative to the other [12].

Laboratory experiments have shown good safety of products under the action of vibration loads, which is typical for transportation of products from place of harvesting to the warehouse.

CONCLUSIONS

The damages of delicate easily damaged products during transportation under action transverse vibrations of the body vehicle may be reduced by following ways:

- increasing the surface of the container bottom, thus reduces the share of products which may be in contact with the sides of the vehicle;
- smoothing the surface of the sides and padding them with soft materials;
- cushioning the vehicle body in transverse direction.

It is recommended to use the device (the container) (The patent 2532829 RF, that is published 10.11.2014, bulletin № 31) to reduce the damages during the transportation of delicate easily damaged products (for example apples) in containers from the point of harvest.

©2006-2018 Asian Research Publishing Network (ARPN). All rights reserved.

REFERENCES

[1] Jukhin I.A. 2017. The reduction of potatoes and apples damages during the on-farm transportation by the vehicle stabilization: thesis of doctor of technical sciences. Ryazan: p. 388.

[2] Yanta J.P., Tong C.B. 2013. Commercial Postharvest Handling of Potatoes (Solanum tuberosum). Regents of the University of Minnesota.

[3] Matzinger B., Tong C. 2013. Commercial Postharvest Handling of Fresh Market Apples (Malus sp.). Regents of the University of Minnesota.

[4] Tomlins K.I., Ndunguru G.T., Rwiza E. and Westby A. 2000. Postharvest handling, transport and quality of sweet potato in Tanzania. Journal of Horticultural Science and Biotechnology. 75(5): 586-590.

[5] Shetty K., Casada M., Zhu H., Thornton M., Nolte Ph. 1998. Fresh-Pack Potatoes: Handling, Packaging, and Transportation in Refrigerated Railcars. Idaho Agricultural Experiment Station: p. 16.

[6] Lisinska G. 1989. Potato science and technology. Elsevier science publishers LTD: p. 391.

[7] Rosen C. J., Eliason R. 2005. Nutrient Management for Commercial Fruit and Vegetable Crops in Minnesota. Department of Soil, Water, and Climate University of Minnesota. p. 40.

[8] Uspensky I.A. 2013. The maintaining quality algorithm of horticultural products during harvest and transportation works. Machinery and equipment for the village. 12: 12-15.

[9] O'Brien M., Claypool L.L. 1963. Causes of fruit bruising on transport trucks. Hilgardia. 6(35): 113-124.

[10] O'Brien M., Gentri J.P., Gibsos R.C. 1965. Vibrating characteristics of fruits as related, to in transit injury. Transactions of the ASAE. 8(2): 241-243.

[11] O'Brien M., Singh R.P. 1981. Minimizing fuel energy use in fruit and vegetable food production and transportation. Beyond Energy Crisis: Opportunity and Challenge. 3rd Int. Conf. Energy Use Manag., Berlin (West), Oct. 26 - 30, 3: 1741-1744.

[12] Uspensky I.A. 2014. The promising devices for improvement of safety of horticultural products during the on-farm transportation. Polythematic network electronic scientific journal of the Kuban state agricultural university (Scientific Journal KubSAU). 1(95): 1104-1114.