VOL. 13, NO. 10, MAY 2018 ISSN 1819-6608
ARPN Journal of Engineering and Applied Sciences

www.arpnjournals.com

DESIGN OF SENSORS FOR ADAPTIVE SOLAR PANELS

M Sreenivasa Reddy[1], A L Siridhara[1] and U Nagamani[2]
[1]Department of Electronics and Communication Engineering, MLR Institute of Technology, Dundigal, Hyderabad, Telangana, India
[2]Department of Electronics and Communication Engineering, Institute of Aeronautical Engineering, Hyderabad, Telangana, India
E-Mail: siridhara@gmail.com

ABSTRACT

The snowballing demand for the energy, made continuous decrease in existing sources of remnant fuels and the growing apprehension regarding environment pollution, has pushed humankind to explore new tools for the production of electrical dynamism using renewable, clean sources, such as wind energy, solar energy, etc. Among the renewable energy sources, non-conventional, solar energy pay for great latent for conversion into electrical energy, able to ensure significance part of the electric energy needs of planet. Today human has become so busy that he is not even able to find time to switch off the lights when not necessary. This is even more effectively seen in the case of street lights where there is a lot of power wastage. This paper's motive is to implement a light that will be switched on in the evening and will switch off when there is enough light on the roads. Nowadays, light technology of LED becomes a candidate as it surpass the HPS lamp from both energy and money saving. The local impact and saving may be increased and enhanced, if the system of solar power (PV) is engaged in LED lamp for street lighting.

Keywords: solar technology, LDR, ATMEGA8, charge controller.

1. INTRODUCTION

For providing enlightenment and safety for vehicles along with pedestrians during night Street lighting was an essential utility specifically in industrialized and urban areas. Conversely, street lights are moderately inefficient, they masticate large amount of power from electrical networks and have prearranged operation times that are frequently non-optimal for the neighboring environment [1]. The LED Street Lamp here uses a Sun tracking solar power for being self-sustaining device and was built to replace the current illumination sources [2]. This device structures sun-tracking capability for maximum energy congregation and darkness gratitude to establish optimal maneuver times. This development provides a reliable and superior alternative to current street illumination systems. One of the most conjoint electrical services in the domain is street light. Street lights materializes everywhere in the world because these deliver illumination during darkish hours. Most existing streetlights seem embryonic because they only have an ON and OFF modes, have a single concentration and have the identical controller source [3]. On a nationwide level, the United States spends about dollars of 163 billion annually on residential outside lighting. Our development, the Solar LED Street light, fluctuations is statistic because its deed relies exclusively on solar energy. Our project, the Street lamp based on Solar LED reduces electrical network energy consumption and assists as illustrations to advocate for renewable form of energy [4]. The Street Lamp discourses the concern aimed at clean energy while improving the throughput of existing systems. The proposed device uses LED lighting because of their low watt ratings compared to previous illuminations sources. Our special light source is powered by 25 watts of power [5]. At present sodium based light bulbs consumes over 138 to 144 watts over a 13-dayspan and LED lighting consumes between 41 to 69 watts over the same period [6]. These base standards applied over a year epitomize savings of 50 to 70 percent i.e., 280 to 400 kWh per year. LED lights preceding longer and shine livelier light than passé light bulbs. Good economic run-through endorses switching to LED illumination since LED lights devour less power. The self-sustaining Solar LED Street light does not need to be dependent on power from the power grid.

2. PROPOSED SYSTEM

Most solar panels turn ON and turn OFF automatically by identifying outdoor light using a nimble source. Solar streetlights are premeditated to work through the night. Many can stay struck for more than one night if the sun does not exist for a couple of days. Of age models included lamps that remained not fluorescent or LED. Solar lights mounted in windy areas are generally fortified with flat panels to enhanced cope with the winds. Latest strategies use wireless technology and indistinct control theory for battery managing. The street lights by means of this technology tin operate as a network with individual lights having the proficiency of performing ON or OFF the network.

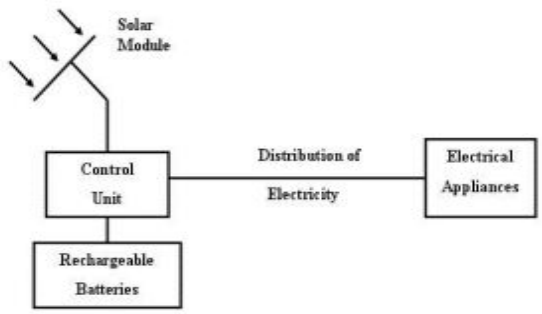

Figure-1. Block diagram of adaptive controlled solar panel.

ARPN Journal of Engineering and Applied Sciences

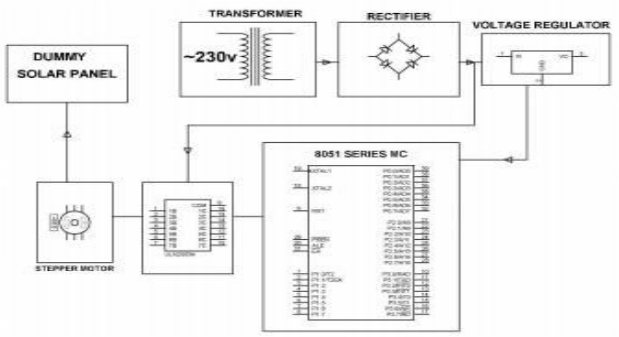

Figure-2. Schematic circuit of the proposed module.

Passive control unit system is essentially conducted without any automatic device. The control Unit of microprocessor is reassuring accurate. The control unit of electro optical systems trails the sun by a solar device that is subtle to solar radiance photo sensors are initiate on PV panel appurtenances produce a signal proportional to the sun light that sprays on them. Changes discussing to the movement of sun occurs in the signal produced by the photo sensors. These assorted signals, which reaches the control system is evaluated and the enforced instruction signal is sent to the motor, which transfers the photovoltaic panel. The panel is stirred according to the control signal and crusade of the photovoltaic panel stops at a location where it staunchly faces the sun, when the signal from both these photo sensors reaches the equivalent significance. In this photo sensor system, the uneven states may exist under steely and partly cloudy meteorological circumstances when the photo sensors do not perceive the sun.

According, it is prophesied that photovoltaic system will turn out to be one of the foremost energy remedies to fulfill the widespread energy requirement by the culmination of this era. Solar panels are habitually set up to be in employed direct sunshine at the interior of the day bordering North in the Southern Hemisphere or south in the Northern Hemisphere. Therefore, dawn and dusk sunlight triumphs the panels at an acute angle dipping the total quantity of electricity which can be produced each day.

Solar cells are assemblies that are tranquil of semiconductor materials and which adapt solar energy straight into current. The quantity of electrical energy which will is obtained will be straight proportional to the attentiveness of sun light that falls arranged the photovoltaic (PV) panel. When light pours on the device the light photons are fascinated by semi conducting material and electric charge carriers are generated. Silicon was the most abundant component available on the earth surface and habitually of the solar cells fabricated using the proposed. The solar cell equivalent circuit is shown in Figure-3.

3. SUN TRACKING SOLAR PANEL PRINCIPLE

The Sun tracking solar panel comprises of two LDRs, solar panel and stepper motor and ATMEGA8 Micro controller. Two light reliant on resistors are arranged on the limits of the solar panel. Light dependent resistors produce low resistance when light falls on them. The stepper motor associated to the panel rotates the panel in the direction of sun. Panel is arranged in such a way that light on two LDRs is compared and panel is switched towards LDR which have high intensity i.e. low resistance linked to other. Stepper motor rotates the panel at definite angle. When the intensity of the light falling on right LDR is more, panel slowly changes towards right and if intensity on the left LDR is more, panel gradually moves towards left. In the noon time, sun is ahead and intensity of light on both the panels is similar. In such cases, panel is constant and nearby is no rotation.

4. WORKING OF SUN TRACKING SOLAR PANEL

Initially power the circuit. • Place the set up in dark • When the two LDRs are in dark, there is no movement in the panel. • Now place a torch in front of the left LDR. Panels slowly move towards its left. • Now move light from left to right. You can observe the panel moving slowly with the torch towards right. • In the middle, when intensity on both LDRs is equal, panel will not move until there is difference between the light intensity falling on the LDRs.

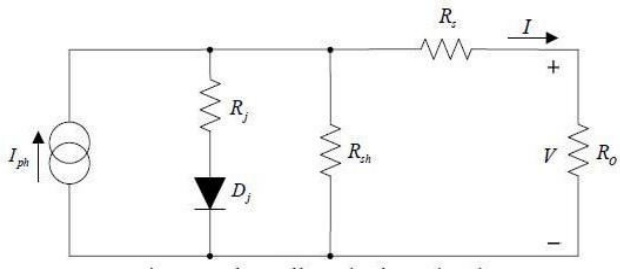

Figure-3. Equivalent circuit of solar cell.

From the above indicated circuit and based on the sorts of the P-N junction, equation presents the connection amid the output current I and the output voltage V:

5. DISCUSSIONS

The result is shown on the front panel of the Lab view software the existent observations three conditions are analyzed on the front panel. When the East light intensity was greater than intensity of West light, the LED which is in East position glows and the mechanism moves in the direction of East When West light intensity is greater than intensity of East light, the LED which in the West position glows and the machine moves to West direction which is indicated by a small LED. If the intensities of two light are identical then all the LEDs connected will luminosities. It shows that two intensities of both directions are same so the contraption will not change and remain in stable state position.

6. CONCLUSIONS

Considering this mechanism, the solar panel collection can be rotated in desired direction ensuing the sun trail to get extreme energy of the sun the efficiency of

the solar panel would be increased. Use of this technique can capture large quantity of solar energy. For this concern the use of the non-conventional energy will surge which is very prolific happening of our upcoming power sector. It is the main influence that once the ease of solar energy system design is unstated, engineers and makings will provide new system strategies that will swell the solar souk worldwide.

Figure-4. Implementation of proposed adaptive solar panels mechanism in a children's park.

Table-1. Design specifications and standards adopted.

Equipment	Luminarie	Solar panel	Charge controller	Battery	Pole
Design specifications 1	18W LED luminarie in Aluminium Die casting housing with Nitchia/CREE power LEDs	90 W Multi crystalline Panel	10amp micro controller based Charge controller with Dusk to dawn operation	80ah C10 rating battery with 3 day autonomy	6mtr Galvanized pole with panel mounting structure and MS sheet powder coated battery box with lock to house battery
Design specifications 2	24W LED luminarie in Aluminium Die casting housing with Nitchia/CREE power LEDs	125w Multi crystalline Panel	10amp micro controller based Charge controller with Dusk to dawn operation	100ah C10 rating battery with 3 day autonomy	6mtr Galvanized pipe with panel mounting structure and MS sheet powder coated battery box with lock to house battery

REFERENCES

[1] T. Tudorache and L. Kreindler Ed. 2010. Design of a Solar Trackers system for pv power plants. Actaply technical Hungarica. 7(1).

[2] C. Nobert. CHEUNG, S. W. ZHAO, W. Chuen, G. KWOK and Z. G. Sun. 2008. Solar Tracking System designed based on linear switched reluctance motor. Control Theory and Application. 25(2).

[3] C. Y. Lee, P. C. Chou, C. M. Chiang and C. F. Lin. 2009. Sun Tracking System-A Review. Sensors. 3875-3880.

[4] N. Barsoum. 2011. Implementation of Solar Tracking Pilot Project. Global journal of Technology and Optimization. Vol. 2.

[5] S. Pattanasethanon. 1998. The Solar Tracking System by Using Digital Solar Position Sensor. American j. of Engineering and applied sciences 3(4): 678-682. 2010. 2nd ed., R. M. Osgood, Jr., Ed. Berlin, Germany: Springer-Verlag.

[6] S. Cemil. 2007. Sun Tracking System with PLC Control for Photo-Voltaic Panels. International Journal of Green Energy, 4: 6, 635-643. http://dx.doi.org/10.1080/15435070701665404 to link with the article: - DOI: 10.1080/15435070701665404.