VOL. 13, NO. 11, JUNE 2018 ISSN 1819-6608
ARPN Journal of Engineering and Applied Sciences

www.arpnjournals.com

IMPROVEMENT OF STRENGTH AND STIFFNESS OF COMPONENTS OF MAIN STRUTS WITH FOUNDATION IN WOODEN FRAME BUILDINGS

Vladimir Ivanovich Rimshin[1], Boris Vasilievich Labudin[2], Vladimir Ivanovich Melekhov[2], AlexandrOlegovich Orlov[2] and Vladimir Leonidovich Kurbatov[3]
[1]Russian Academy of Architecture and Construction Sciences, Moscow State University of Civil Engineering (National Research University)(MGSU), Yaroslavskoeshosse, Moscow, Russian Federation
[2]Northern (Arctic) Federal University named after M.V. Lomonosov (NArFU), nab. SevernoyDviny str., Arkhangelsk, Russian Federation
[3]North-Caucasian Branch of Federal State Budgetary Institution of Higher Education, Belgorod State Technological University named after V.G. Shukhov, MineralnyeVody, Zheleznovodskaya St., Russian Federation
E-Mail: v.rimshin@niisf.ru

ABSTRACT

The advantages of wood as a building material were listed, the main structures of frame-shaped wooden buildings were mentioned. Various types of lattice racks, important problems related to the design and manufacture of interfaces for these structures were considered. The ways of increasing the strength and reliability of the nodes of mating wooden lattice racks were indicated. Two types of claw washers are considered as connectors of not only the nodes of the interface of wooden lattice racks, but also for sealing the branches of wooden structures of the main racks of the frame in the foundation, a variant of such connection was proposed and an example of calculation was given.The materials for the study were two options for attaching a wooden shim to the branch of the main post: the first one - on bolts; the second - on the claw connectors of two types. The required number of connectors was calculated for each variant.The calculation showed that claw connectors of the type C1 and C8 have a greater load-bearing capacity than a bolted connection with a diameter of 16 mm.As a result of the research it was established that the use of claw connectors reduces the material consumption of the structure, provides strength, rigidity and operational reliability of the connection.

Keywords: wood, wooden lattice racks, strength, claw connections, calculation.

INTRODUCTION

Wood and wood-composite products serve as a starting material for the manufacture of various building structures. This is due to the fact that they have high architectural advantages, are reliable, solid, durable and economical, resistant to aggressive environments, have a huge renewable raw material base in Russia. Using the wood not only in the construction of public, industrial, agricultural, but also in multi-storey residential frame buildings is becoming more and more popular nowadays.

The basis of the frame of modern wooden buildings are two- and three-hinged frames, in which the main elements are the struts and crossbars. Lattice struts have a particular interest for our research. Such struts are used for a long time, tested by long-term practice, being strong and rigid structures (Figure-1).

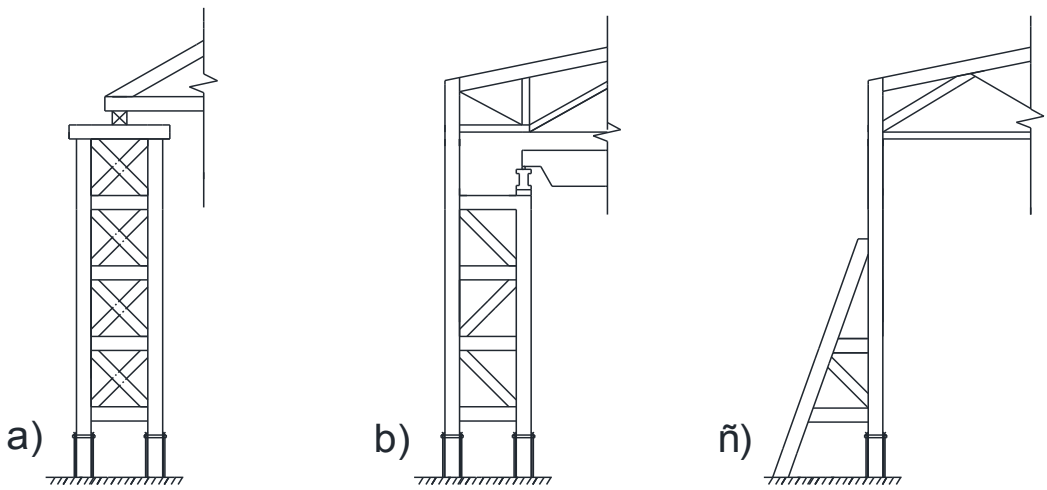

Figure-1. Variants of lattice struts
a) two-branch, with parallel racks; b) the same, with a crane stand; c) strut with a skew notch.

One of the most important problems associated with the design and manufacture of nodes for joining wooden struts is providing rigidity, strength and load-bearing capacity. The reliability of lattice strut structures

can be increased by increasing the shear strength at the joints of the elements of the wooden structure. For this, various types of special connectors can be used in the form of claws, ring keys, soil nail groups, etc.

Advantages of connections on claw-type washers include simplicity of pressing the joint, no need for preliminary hole preparation, increased strength, rigidity and bearing capacity of the joint, since the force is fractionally distributed over a large surface of the crushing of the wood and provides sufficient safety of coupling from the shearing condition. Such compounds are particularly widely used in the manufacture of trusses, composite beams and struts, with the reinforcement of wooden structures for various purposes abroad, and are beginning to be used in Russia (Rimshin, Labudin, Melehov, Popov and Roshhina 2016).

LITERATURE REVIEW

The construction and calculation of the concerned lattice structures were studied by L.V. Endzhievsky, K.W. Johansen (1949), B.O. Hillson (1995), T.L. Wilkinson (1991), A. Smith (1983), G.J. Blass and P. Schädle (2011), Rimshin V.I., Labudin B.V., Melehov V.I., Popov E.V. and Roshhina S.I. (2016), Serov E.N., Sannikov Y.D. and Serov A.E. (2011), Otresko A.I. (1957), Filippov N.A. and Konstantinov I.A. (1965), Labudin B.V. (2007), Naychuk, A.Y., Leshchuk E.V. (2014), Karateev L.P. (2013) and others. Studies of joints of elements of wooden structures on washers, dowels, metal toothed plates (MTP), pasted and screwed soil nails were carried out byS. Malinovski (1989), A.K. Naumov (1973), V.M. Vdovin, A.I. Muhaev and M.V. Ariskin (2013), V.G. Mironov, V.G. Kotlov, M.V. Ariskin, M.S. Galakhov, A.V. Karelian, D.D. Ishmaeva (Ishmaeva 2014), A.G. Chernyh and E.V. Danilov (2013), S.B. Turkovski, A.A. Pogoreltsev, Arkaev M.A. (2017), Yao Wei (2015), Svetozarova E.I. (1974) and others.

MATERIALS AND METHODS

The use of claw-type fastener is advisable not only in the nodes of lattice struts, but also in the built-up support of branches of wooden structures of the main struts of the frame in the foundation. Figure-2 shows a variant of such connection (with claw-type connectors).

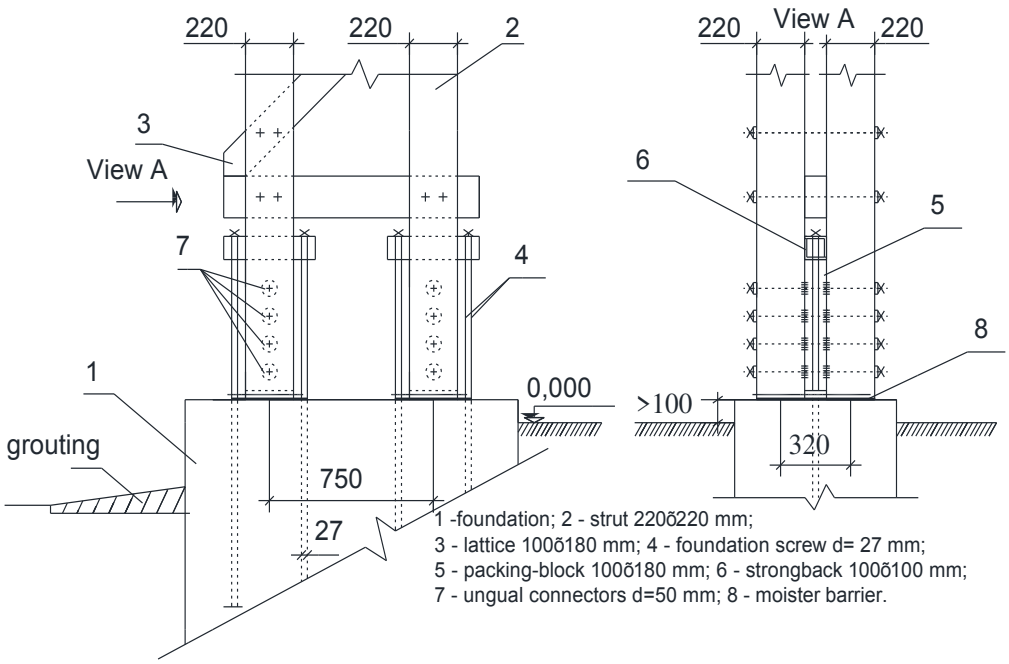

Figure-2. Variant of claw-type connectors in the design of built-in support in the foundation.

Let's consider the offered variant of built-up support of branches of wooden structures of the main struts of the frame in the foundation for occasions: the first - the shim is bolted to the strut; the second - the shim is bolted to the strut on claw-type connectors.

The initial data was taken according to (Filippov and Konstantinov 1965). The step between the transverse frames (B) - 6 m; the span of the frame (L) - 18 m; the height of the crane side of the post (h_p) - 6.6 m; the distance between the axes of the struts in width (h_0) - 750 mm; the size of the cross-section of struts - 220 • 220 mm; the cross-section dimension of slanted strut - 100 • 180 mm; the design bending moment in the lower part of the crane strut (M_2) - 121.4 kN * m; vertical load in the cranial part of the left branch (Np) - 79.4 kN; the coefficient ξ - 0.85; the diameter of the bolts (d_b) - 16 mm.

The maximum value of the load acting on the branch of the strut is determined from expression:

$$N_p = -N_2 + \frac{M_2}{h_0 \cdot \xi} \quad (1)$$

Bearing capacity of shearing action of bolt is determined by the formula:

$$T_H = 0{,}5ad_\delta \quad (2)$$

where a=10.

The required number of bolts for fastening the strut to the patch plate is determined from expression:

$$n = \frac{N_p}{T_H}. \quad (3)$$

For the second occasion of attachment calculation is carried out according to (StADD - 3.2-2012, 2012; SP 64.13330.2011, 2011). The diameter of bolts, their bearing capacity ($F_{v,Rk,bolt}$), the thickness of the strut (t_1), the thickness of the shim (t_2) and the amount of the permanent load (N_p) is adopted similarly to the first variant. As a connectors, anclaw-type washer of type C1 and C8 was chosen from (StADD - 3.2-2012, 2012) (Figure-3).

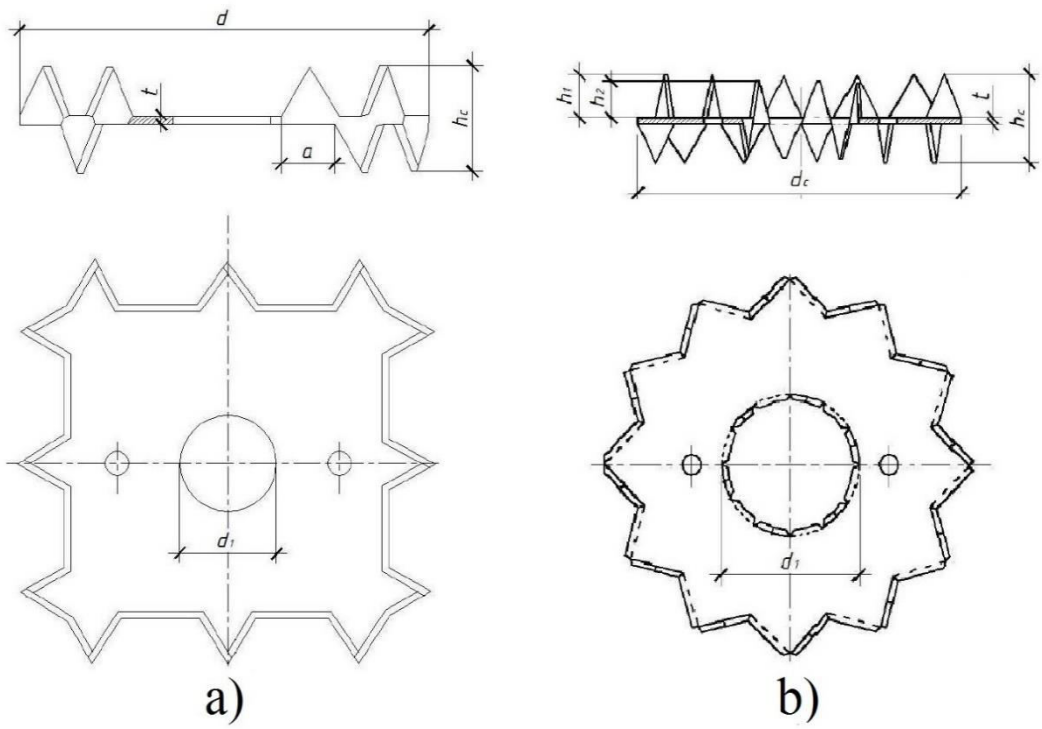

Figure-3. Claw-type connectors - C8 (a) and C1 (b).

Table-1. Characteristics of ungual connectors.

Connector type	Diameter d_c(C1), mm Side width d_c(C8), mm	Height h_c, mm	Thickness t, mm	Diameter of the central hole d_1, mm
C1	50	13	1,0	17
C8	50	14	1,2	14,5

The characteristic (normative) value of the bearing capacity of a joint using a toothed plate is determined from expression

$$F_{v,Rk,con} = F_{v,Rk} + F_{v,Rk,bolt}, \quad (4)$$

Where $F_{v,Rk,con}$ = the characteristic (normative) value of the bearing capacity of the joint with the toothed plate, N;

$F_{v,Rk}$ = the characteristic (normative) value of the bearing capacity of the toothed plate, N;

$F_{v,Rk,bolt}$ = characteristic (normative) value of bearing capacity of the tension bolt, N.

The characteristic (normative) value of the load-bearing capacity $F_{v,Rk}$ of the unitary two-sided toothed plate in the joint is determined from expression

$$F_{v,Rk} = 25k_1k_2k_3d_c^{1,5}, \quad (5)$$

where d_c = diameter of toothed plate.

Coefficient k_1 is a coefficient, depending on the thickness of the joined elements, determined from expression:

$$k_1 = min\begin{cases}\frac{t_1^1}{3h_e},\\ \frac{t_2}{5h_e}\end{cases} \quad (6)$$

Where t_1 = thickness of the strut (220 mm);
t_2 = thickness of the shim (100 mm);
h_e = the depth of insertion of the teeth of the plate into the joint element in question, mm.
For double-sided tine plates

$$h_e = \frac{(h_c - t)}{2}. \quad (7)$$

Coefficient k_2 is a coefficient, depending on the distance $a_{t,3}$ to the loaded end. If the distance to the loaded end is less than $2d_c$, the value of k_2 should be determined from expression

$$k_2 = min\begin{cases}1\\ \frac{a_{3,t}}{1{,}5d_c},\end{cases} \quad (8)$$

And

$$a_{t,3} = max\begin{cases}1{,}1d_c\\ 7d\\ 80\text{мм}\end{cases}, \quad (9)$$

where d - bolt diameter, mm.

Coefficient k_3 is a coefficient that depends on the density of the wood and is determined from expression

$$k_3 = min\begin{cases}1\\ \frac{\rho_k}{350},\end{cases} \quad (10)$$

where ρ_k is the characteristic (normative) value of wood density in the joint, kg / m^3. We accept as the material of stands - spruce of the second grade, ρ_k = 500 kg / m^3.

Calculation example

Substituting numerical values into formulas (1-10), we obtain the following results:

1. $N_p = -N_2 + \frac{M_2}{h_0 \cdot \xi} = -79{,}4 + \frac{121{,}4}{0{,}75 \cdot 0{,}85} = 111{,}0\ kN.$

2. $T_H = 0{,}5ad_б = 0{,}5 \cdot 10 \cdot 1{,}6 = 8\ kN.$

3. $n = \frac{N_p}{T_H} = \frac{111{,}0}{8{,}0} = 13{,}9,$ take the number of bolts n = 14.

Then, calculate the number of connectors C1 with a bolt diameter - 16 mm:

4. $k_1 = min\begin{cases}1\\ \frac{220}{3 \cdot 6} = 12{,}2\\ \frac{100}{5 \cdot 6} = 3{,}33\end{cases}.$

5. $a_{t,3} = max\begin{cases}1{,}5 \cdot 50 = 75{,}0\ mm\\ 7 \cdot 16 = 112\ mm\\ 80\ mm\end{cases}.$

6. $k_2 = min\begin{cases}1\\ \frac{112}{2 \cdot 50} = 1{,}12\end{cases}.$

7. $k_3 = min\begin{cases}1\\ \frac{500}{350} = 1{,}4\end{cases}.$

8. $F_{v,Rk} = 25k_1k_2k_3d_c^{1,5} = 25 \cdot 1 \cdot 1 \cdot 1 \cdot 50^{1,5} = 8838\ N.$

9. $F_{v,Rk,con} = F_{v,Rk} + F_{v,Rk,bolt} = 8838 + 8000 = 16838\ N.$

10. The required number of claw-type connectors with bolts for fastening the linings according to (Serov, Sannikov and Serov 2011) will be:

$$n = \frac{N_p}{F_{v,Rk,con}} = \frac{111\ kN}{16{,}8\ kN} = 6{,}6.$$

Take the number of claw-type connectors n = 7.

Then we calculate the number of connectors C8 with a bolt diameter of 14 mm:

11. $k_1 = min\begin{cases}1\\ \frac{220}{3 \cdot 6{,}5} = 11{,}3\\ \frac{100}{5 \cdot 6{,}5} = 3{,}1\end{cases}.$

12. $a_{t,3} = max\begin{cases}1{,}5 \cdot 50 = 75{,}0\ mm\\ 7 \cdot 16 = 98\ mm\\ 80\ mm\end{cases}.$

13. $k_2 = min\left\{\frac{98}{2 \cdot 50} = 0{,}98 \quad 1\right.$.

14. $k_3 = min\left\{\frac{500}{350} = 1{,}4 \quad 1\right.$.

15. $F_{v,Rk} = 25k_1k_2k_3d_c^{1,5} = 25 \cdot 1 \cdot 0{,}98 \cdot 1 \cdot 50^{1,5} = 8662\ N.$

16. $T_H = 0{,}5ad_\delta = 0{,}5 \cdot 10 \cdot 1{,}4 = 8\ kN$

17. $F_{v,Rk,con} = F_{v.Rk} + F_{v.Rk,bolt} = 8662 + 7000 = 15662\ N$

18. The required number of claw-type connectors with bolts for fastening the linings according to (Serov, Sannikov and Serov 2011) will be:

$$n = \frac{N_p}{F_{v,Rk,con}} = \frac{111kN}{15{,}6kN} = 7{,}1$$

Take the number of claw-type connectors n = 8.

Discussion of results

Calculating the interfacing of lattice struts with concrete foundation showed that:

a) To ensure reliable coupling in the first case (bolted connection only), 14 bolts with a diameter of 16 mm are required.

b) To ensure reliable coupling in the second case (bolts with connectors), 7 bolts with a diameter of 16 mm and 7 bilateral connectors C1 with a diameter of 50 mm or 8 bolts with a diameter of 14 mm and 8 bilateral connectors C8 with a side of 50 mm are required.

CONCLUSIONS

a) The use of claw connectors type C1 and C8 in the closing of the branches of wooden lattice racks reduces the material consumption of metal products in the assembly of the design of conjugation of elements in 2 and 2.2 times respectively.

b) Joints consisting of bolts and claw connectors of C1 or C8 type have a bearing capacity that is 2.1 and 1.95 times greater than the bearing capacity of a joint consisting only of bolts with diameter of 16 mm.

c) In modern norms, up to the present time, research results of the 30-50 years of the last century are used, which makes it urgent to use modern types of connectors and to continue research in this direction.

REFERENCES

[1] Arkaev M.A. 2017. Usilenie derevjannyh konstrukcij s ispol'zovaniem stal'nyh vityhkrestoobraznyh sterzhnej [Strengthening of wooden structures using steel vitrine-rods. Thesis]. Orenburg. p. 190.

[2] Blass H.J. and Schädle P. 2011. Ductility aspects of reinforced and non-reinforced timberjoints. Engineering Structures. 33, 3018-3026.

[3] Chernyh A.G. and Danilov E.V. 2013. Metody I ssledovanija soedinenij derevjannyh konstrukcij na kogtevyh shponkah. [Methods and studies of gray retarded structures on claw keys]. Modern problems of science and education. 2, 150.

[4] Filippov N.A. and Konstantinov I.A. 1965. Primery rascheta i proektirovanija derevjannyh konstrukcij [Examples of calculation and design of wooden structures]. Moscow: Strojizdat. p. 305.

[5] Hilson B.O. 1995. Joints with Dowel-type Fasteners - Theory. Paper C3: Timber Engineering Step 1: Basis of Design, Material Properties, Structural Components and Joints, Almere, The Netherlands, Centrum Hout. C3/1-C3/11.

[6] Ishmaeva D.D. 2014. Zhestkie uzlovye soedinenija nakleenyh stal'nyh shajbah v balochnyh strukturah iz kleenyh derevjannyh jelementov. [Rigid nodal joints glued steel washers in beam structures made of glued wooden elements]. Thesis. Penza. p. 171

[7] Jao Vjej. 2015. Razrabotka i raschet uzlovyh soedinenij nesushhih, prostranstvennyh sterzhnevyh konstrukcij iz bambuka. [Development and calculation of nodal connections of bearing, spatial core structures from bamboo]. Thesis. St. Petersburg. p. 163.

[8] Johanson K.W. 1949. Theory of timber connections. International Association for Bridgeand Structural Engineering. 9, 249-262.

[9] Karateev L.P. 2013. Raschet stoek derevjannogo karkasnogo zdanija: metod. Ukazanija. [Calculation of the racks of a wooden frame building: method. Directions]. St. Petersburg: SPbGASU. p. 52.

[10] Labudin B.V. 2007. Sovershenstvovanie kleenyh derevjannyh konstrukcij s prostranstvenno-reguljarnoj strukturoj: monografija [Perfection of glued wooden structures with spatially regular structure]. Arhangel'sk: Arhang. Gos. Tehn. Un-t. p. 267.

[11] Malinowski C. 1989. Zur Geschichte der Verbindungstechnik-Verbinder aus Stahlblech. Bauen mit Holz. 11, 776-779.

[12] Naumov A.K. 1973. Issledovanie nesushhej sposobnosti nagelja-zuba v soedinenijah derevjannyh jelementov. Vtoraja nauchnaja konferencija molodyh uchenyh Volgo-Vjatskogo regiona. [Study skills absurdity Nagel-zuba in the compounds of the villagers. The second scientific conference of young scientists in the Volga-Vyatka region]. Yoshkar-Ola. pp. 16-17.

[13] Naychuk A.Y. and Leshchuk E.V. 2014. Chislennoe issledovanie naprjazhennogo sostojanija drevesiny v zone vintov, rabotajushhih na vydergivanie poperek volokon. Sb. trudov mezhdunarodnoj nauchno-tehnicheskoj konf. Stroitel'naja nauka - XXI vek: teorija, obrazovanie, praktika, innovacii severo-arkticheskomu regionu. [Numerical study of stressful coexistence in the zone of screws, working on the release of fiber bundles. Bachelor of Science in Science of the Works of the International Scientific and Technical Conference. Building Science - XXI Century: Theory, Education, Practice, Innovation in the Northern Arctic Region]. Arkhangelsk. pp. 276-283.

[14] Otreshko A.I. 1957. Spravochnik proektirovshhika: Derevjannye konstrukcii [Reference book of the designer: Wood structures]. Moscow: Strojizdat. p. 265.

[15] Rimshin V.I., Labudin B.V., Melehov V.I., Popov E.V. and Roshhina S.I. 2016. Soedinenija jelementov derevjannyh konstrukcij na shponkah i shajbah [Connections of the cured village constructions on dowels and washers]. Vestnik MGSU. 9: 35-50.

[16] Serov E.N., Sannikov Ju.D. and Serov A.E. 2011. Proektirovanie derevjannyh konstrukcij: ucheb. Posobie [Designing of reconstructed structures: textbook. Allowance]. Moscow: Izdatel'stvo ASV. p. 536.

[17] Smith I. 1983. Short-term load-deformation relationship for joints with dowel typeconnectors. Ph.D. Thesis, CNAA.

[18] SP 64.13330.2011. Derevjannye konstrukcii. Aktualizirovannaja redakcija SNiP II -22-81 [Wooden constructions. Updated version of SNiP II -22-81]. (2011). Moscow. p. 66.

[19] StADD - 3.2-2012. Derevjannye konstrukcii. Soedinenija derevjannyh jelementov s ispol'zovaniem zubchatyh plastin [Wooden constructions. Connection of wooden members using toothed plates]. (2012). St. Petersburg. p. 40.

[20] Svetozarova E.I.1974. Konstrukcii iz kleenoj drevesiny i vodostojkoj fanery. Primery proektirovanija: ucheb. Posobie [Constructions from the wedge life and waterproof fanatics. Initial design: training. Allowance]. Leningrad: LISI. p. 133.

[21] Vdovin V.M., Muhaev A.I. and Ariskin M.V. 2013. K ocenke naprjazhenno-deformirovannogo sostojanija derevjannyhj elementov, soedinennyh centrovym I vkleennymi shponkami [To the evaluation of the stress-strain state of the ancient elements, the adjacent central ones and included dowels]. Regional architecture and construction. 2: 81-90.

[22] Wilkinson T.L. 1991. Dowel bearing strength. Res. Pap. FPL -Rp-505. US DA Forest Serv., Forest Prod. Lab, Madison, WI. p. 12.