VOL. 13, NO. 15, AUGUST 2018 ISSN 1819-6608
ARPN Journal of Engineering and Applied Sciences

www.arpnjournals.com

A LOGIC SCORING OF PREFERENCE ALGORITHM USING ISO/IEC 25010:2011 FOR OPEN SOURCE WEB APPLICATIONS MOODLE AND WORDPRESS

Aaron Don M. Africa
Department of Electronics and Communications Engineering, Gokongwei College of Engineering, De La Salle University, Manila, Philippines
E-Mail: aaron.africa@dlsu.edu.ph

ABSTRACT

An open source is software in which the source code is freely available and may be distributed or revised. The internet is composed of a variety of these systems and is frequently used. One category of open source systems is web applications. Examples of open source web applications are Moodle and Wordpress. One problem of open source web applications is because their codes are freely available and revised many times by different programmers it may not be standard and optimized. Logic scoring of preference is an evaluation methodology with theoretical foundations in fuzzy logic and optimization systems. This methodology allows the nonlinear aggregation of a large number of input criteria without the loss of important data. This research will develop a novel logic scoring of preference algorithm that evaluates open source web applications Moodle and Wordpress to follow the International standard ISO/IEC 25010:2011. A new metric for open source web application quality will be presented and will be focused on the usability and functional suitability of the system. This will serve as a guide for the developers of these programs to further improve the software and optimizing it.

Keywords: Moodle, Wordpress, logic scoring, preferences, web applications.

1. INTRODUCTION

1.1 Background of the study

Open source web applications composes a large part of the internet [1]. They are used for applications like online quiz, social media, blogs etc. These applications can also be integrated to mobile devices like android versions of Moodle [2]. Two of the most commonly used Open Source Web Applications are Moodle for making online exams and Wordpress for creating website content [3].

Open source means that their codes are freely available. Their source codes can easily be downloaded in websites like Github and Sourceforge [4].These programs are free, you only need a web server to use the system and make it open to the world wide web.

Open source web applications can easily be customized since their codes are open to the public. Some of these web applications are pioneers of the internet [5]. An example is Wordpress, it was released in 2003. This software has no company maintaining it, only a community of programmers that constantly updates it [6]. Wordpress has endured changes in the internet landscape like the rise of mobile web applications etc. This is due to the community of programmers maintaining updating the program constantly [7].

1.2 Statement of the problem

Open source web applications like Moodle and Wordpress changed over the years. These programs adapt to technology, because to the help of the community of programmers maintaining it. A problem is because many people are changing the codes of Moodle and Wordpress the system may not be standard. ISO (the International Organization for Standardization) and IEC (the International Electrotechnical Commission) released a metric to determine the quality of Systems and Software. The standardisation is called ISO/IEC 25010:2011 [8]. Following this ISO standard will these open source web applications optimized. This research will present a new algorithm to determine the open source web application quality of Moodle and Wordpress in compliance with the ISO/IEC 25010:2011 using the logic scoring of preference. Focus will be given on the usability and functional suitability of the system.

1.3 Significance of the study

Developing a logic scoring of preference algorithm to evaluate open source web applications Moodle and Wordpress to follow the International standard ISO/IEC 25010:2011 will help standardized and optimize open source web development. The different programmer contributors will have a guide on how to develop the program a standardized manner. This research will also show that the mathematical model Logic Scoring of Preference can be used in creating an evaluation methodology for open source web applications.

2. MOODLE

The Moodle software is written in the PHP language [9]. It was originally developed by Martin Dougiamas in 2002 to help educators create collaborative and interactive contents [10]. Moodle is an online learning platform that provides administrators, educators and students with a single secure integrated system. Moodle is provided freely as an opensource. This program can be modified by anyone without worrying about licensing fees [11]. This program provides a personalized learning

environment. Moodle is easy to use, this software has drag and drop features. This program is also cost efficient, flexible and has multilingual features, meaning you can change the language easily [12].

Moodle can be translated to almost 120 languages; this makes it ideal for use in the field of education. This program is also customizable, templates are provided so the aesthetics of the website can be changed easily. This program can be tailored for individual needs [13]. Moodle has a modular setup. The advantage of a modular setup is developers can create plugins and integrate external applications easily [14]. This makes Moodle achieve specific functionalities that the user requires. One good advantage of Moodle is there is also a program called Moodle mobile. This makes the Moodle online content be viewed easily in a mobile android device [15].

3. WORDPRESS

Wordpress is an open source content management system [16]. This program is based on PHP and uses MySql as its database. This program must be installed in a webserver in order to work. Wordpress started as existing blog software called b2/cafeblog. In 2003 two developers of the b2/cafeblog built new open source software based on the program. This program was called Wordpress and the first version was released on May 2003 [17]. The first version of Wordpress includes a new admin interface, distinctive templates and XHTML 1.1 compliant. Wordpress uses a web template system by using a template processor. A unique feature of Wordpress it is has front controller architecture. What it does is it routes all request for non static URLs to a single PHP file and it parses the URL to identify the target page. This feature allows for more readable permalinks.

Wordpress has the ability to switch to different themes. This means that the user can change the appearance of the website with a few clicks. These themes may be installed by using the "Wordpress appearance administration" tool which can be found at the dashboard. Since the codes are open source, Wordpress users can develop and create their own themes [18]. (Wordpess also has plugin capabilities. These make users extend the capabilities of the program by installing the plugins they needed. Some of the plugins available are for portals and search engine optimization. Wordpress also has mobile support so they can be easily viewed in Android and IOS devices [19]. This program is also search engine friendly because of its clean permalink structure it is easy to tag post for search engine optimization.

4. ISO/IEC 25010:2011

ISO/IEC 25010:2011 is a quality standard that is applicable to human computer system interface. This standard replaced the ISO/IEC 9126 [20]. One of its objective is to address human biases that has an effect on software development projects. These biases includes determining the prioritization of a project and giving clear definitions of what it means by “success” in the project. This standard tries to create a common understanding on the objective of the project and its goals. The scope and applications of this model includes project evaluation from different perspectives. Some activities that can benefit on using quality models are [21].

- recognizing the software and system requirements
- recognizing software and system design objectives
- recognizing software and system testing objectives
- recognizing the quality criteria for quality assurance
- recognizing the acceptance criteria for software development creating measures for quality characteristics

5. THEORETICAL FRAMEWORK

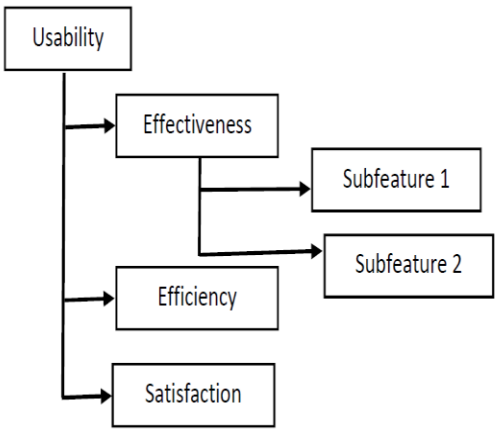

Figure-1. Diagram of LSP aggregation blocks.

A method of evaluating complex hardware and software systems was proposed by J. Dujmovic in 1996 [22]. This method is called the logic scoring of preference (LSP). The features of logic scoring of preference are composed of aggregation blocks. These blocks are in a hierarchical manner likefuzzy blocks [23]. The logic scoring of preference is designed to evaluate several software and hardware applications qualitatively through a method called logic scoring.

An aggregation tree is needed to perform logic scoring of preference. The lower features are the sub features of the higher features in the hierarchy [24]. In Figure-1 the results of a higher level with lower level features are shown. In logic scoring of preference there is a concept called elementary preference. This elementary preference is what makes up LSP hierarchy. In Figure-1 examples of elementary preference are usability, effectiveness, performance efficiency and satisfaction. In which effectiveness, performance efficiency and satisfaction are the sub features of usability.

6. METHODOLOGY

6.1 Outlining the quality requirement tree

The first step is to outline the quality requirement tree based on the ISO/IEC 25010:2011. Specific goals from the user’s point of view will be specified. The requirement tree that will be made must coincide with the

ISO/IEC 25010:2011. For this research focus will be on the Usability and Functional Suitability only. The following are the explanations of the two attributes according to [25]:

Usability: It is a quality characteristic that can be indirectly measured. It is defined by the level of effort exerted by the user to operate and communicate with the Open Source web application.

Functional suitability: It defined the features of the Open Source web application. For this research focus will be given on its searching capabilities

6.2 Elementary criteria establishment

Once we have established the tree, the values of the elementary criteriais now an Information System [26]. The Elementary preference is interpreted as a continuous logic variable. A value of 0 means that the score feature does not satisfy the requirement and a value of 1 means it is satisfied [27]. If the values of the criterion are between 0 and 1, it means that only parts of the requirement are satisfied. We can also interpret the criterion in terms of percentages in the range of 0 to 100%.

6.2.1 Usability

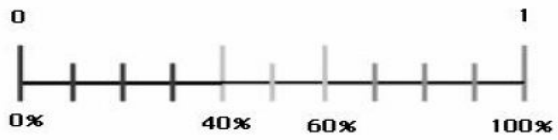

Figure-2. Usability preference scale.

Figure-2 shows the preference scale for usability. If the elementary criterion is available, it will have a value of 1. If it is not available if will have a value of 0. The value of the preference scale is either 0 or 1.

6.2.2 Functional suitability

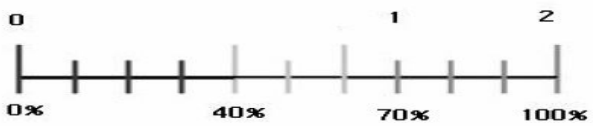

Figure-3. Preference scale of the category for advance search.

Figure-2 shows the preference scale in terms of functional suitability. This scale is divided into two parts. This scale is categorized into 2 to 3 rating. The advance search category is 0 if there is no advance search feature available. 1 if it only has minimal search capabilities and 2 if it has advance search capabilities.

7. DATA AND RESULTS

The Aggregation tree of the Elementary Preference is created in Table-1. This one describes the basic features of Usability and Functional Suitability of Moodle and Wordpress.

Table-1. Elementary preferences.

Elementary preference		
	Moodle	**Wordpress**
1. Usability		
1.1 Global Site Understandability		
1.1.1 Global Organizational Scheme		
1.1.1.1 Table of Contents	100	100
1.1.1.2 Site Map	100	100
1.1.2 Image Map	0	100
1.2 Feedback and Help Features		
1.2.1 Quality of HelpFeatures		
1.2.1.1 Global Help	100	100
1.2.1.2 Specific Help	0	100
1.2.2 Addresses Directory		
1.2.2.1 Email Directory	100	100
1.2.2.2 Phone-FaxDirectory	100	100
1.2.2.3 Post Mail Directory	0	0
1.2.3 Link Based Feedback		
1.2.3.1 FAQ features	100	100
1.2.3.2 What's New Feature	0	100
1.2.4 Form based feedback feature		
1.2.4.1 QuestionnaireFeature	100	100
1.2.4.2 Comments / Suggestions	100	100
1.2.4.3 Subject-oriented Feedback	100	100
1.2.4.4 Guest Book	0	0
1.3 Miscellaneous Feature		
1.3.1 Foreign Language Support	100	100
1.3.2 Website last update indicator		
1.3.2.1 Global	100	100
1.3.2.2 Scoped	0	100
2. **Functional Suitability**		
2.1 Searching and Retrieving issues		
2.1.1 Quick Search	70	100
2.1.2 Advance Search	100	100
2.2 E-subscriptions	70	70
2.3 Account Facility		
2.3.1 Account Availability	100	100
2.3.2 Account Security	70	100

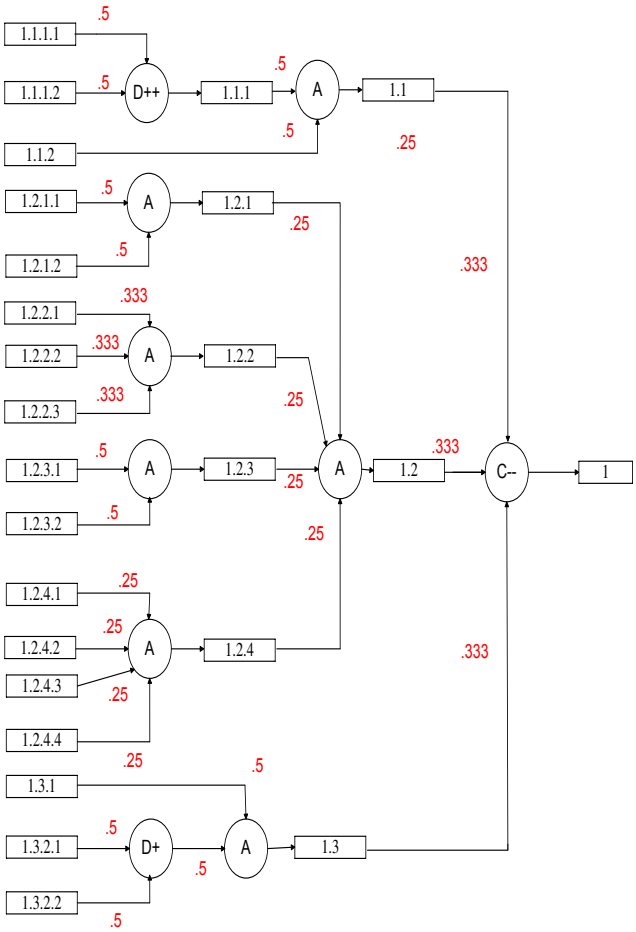

Figure-4. LSP aggregation tree for usability.

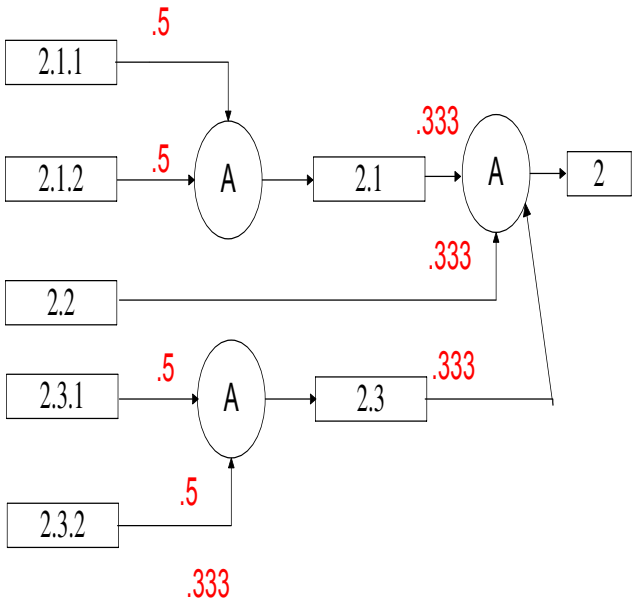

Figure-5. LSP aggregation tree for functional suitability.

Table-2. Results of the global quality preferences.

Application	Usability	Functional suitability
Moodle	56.12	79.92
Wordpress	92.744	89.91

Figures 4 and 5 shows the LSP aggregation tree for usability and functional suitability. This tree can determine the site score based on the elementary preferences [28]. A program was created to determine the results of the tree. Table-2 shows the complete results of partial and global quality preferences after computing the equivalent aggregated criteria.

8. CONCLUSIONS AND RECOMMENDATIONS

This research proposed a new a logic scoring of preference algorithm for evaluating open source web applications Moodle and Wordpress. This algorithm used the two categories of ISO/IEC 25010:2011 which are usability and functional suitability. A quality requirement tree was created to test the two functions. Functional suitability has a rating of 0, 2 and 3 depending on the availability of the advance search feature. The Usability has a 0 and 1 rating depending on the availability of the feature. Using the algorithm Moodle had a rating of 56.12 and 79.92 for usability and functional suitability respectively while Wordpress had a rating of 92.744 and 89.91 for the two categories.

This research only focused on the basic features of Moodle and Wordpress for usability and functional Suitability. For future research more features can be added in the two categories expanding the aggregation tree.

REFERENCES

[1] Vitolo C., Elkhatib Y., Reusser D., Macleod C. and Buytaert W. 2015. Web technologies for environmental Big Data. Environmental Modelling & Software. 63(1): 185-189.

[2] Saral H. 2013.Integrating Mobile Setting into Modern Classroom: A Multi-user, Platform-independent, Mobile Content Management System. Procedia - Social and Behavioral Sciences. 106(10): 1523-1531.

[3] Capterra. 2017. Capterra Training Technology https://blog.capterra.com/top-8-freeopen-source-lmss/

[4] Africa A. and Cabatuan M. 2015. A Rough Set Based Data Model for Breast Cancer Mammographic Mass Diagnostics.International Journal of Biomedical Engineering and Technology. 18(4): 359-369.

[5] Michaeli S. 2016. The five founding fathers of Open Source

https://www.whitesourcesoftware.com/whitesource-blog/open-source-founding-fathers/

[6] Gamalielsson J. and Lundell B. 2014. Sustainability of Open Source software communities beyond a fork: How and why has the Libre Office project evolved? Journal of Systems and Software. 89(1): 128-145.

[7] Wpengine. 2017. Wpenginehttps://wpengine.com/

[8] ISO/IEC 25010:2011. 2011. International Organization for Standardization https://www.iso.org/standard/35733.html

[9] Costa C., Elkhatib Y., Alvelos H. and Teixeira L. 2012. The Use of Moodle e-learning Platform: A Study in a Portuguese University. Procedia Technology. 5(1): 334-343.

[10] Moodle. 2017. The History of Moodle https://docs.moodle.org/33/en/History

[11] Awang N. and Darus M. 2015. Evaluation of an Open Source Learning Management System: Claroline. Procedia - Social and Behavioural Sciences. 67(1): 416-426.

[12] Moodle News. 2017. A Multilingual, Localized LMS, The Key For International Team Engagement https://www.moodlenews.com/2017/a-multilingual-localized-lms-the-key-for-international-team-engagement/

[13] Shulamit K. and Yossi E. 2011. Development of E-Learning environments combining learning skills and science and technology content for junior high school. Procedia - Social and Behavioral Sciences. 11(1): 175-179.

[14] Edick H. 2015. 11 Moodle Plugins For A Corporate Moodle https://elearningindustry.com/11-moodle-plugins-corporate-moodle

[15] Moodle Mobile. 2017. Moodle Mobile Education https://play.google.com/store/apps/details?id=com.moodle.moodlemobile&hl=en

[16] Yuizono T., Jiang J., Zhao X. and Munemori J. 2014. The Use of Moodle e-learning Platform: A Study in a Portuguese University. Procedia Technology. 35(1): 1652-1661.

[17] Codex. 2011. History of Wordpresshttps://codex.wordpress.org/History

[18] Wordpress Themes. 2017. Wordpress Themes Directory https://wordpress.org/themes/

[19] Wordpress Mobile. 2017. Wordpress Android mobile. https://play.google.com/store/apps/details?id=org.wordpress.android&hl=en

[20] Arborosa A. 2015. A collection of quality characteristics https://arborosa.org/2015/07/15/a-collection-of-quality-characteristics/

[21] ISO/IEC 25010:2011 en. 2011. Systems and Software Engineering - System and Software Quality Requirements - System and Software Quality Models. https://www.iso.org/obp/ui/#iso:std:iso-iec:25010:ed-1:v1:en

[22] Dujmovic J. 1996. A Method of Evaluation and Selection of Complex Hardware and Software Systems. 22nd International Conference for the Resource Management and Performance Evaluation of Enterprises. 368-378.

[23] Africa A. 2017. A Rough Set Based Solar Powered Flood Water Purification System with a Fuzzy Logic Model. ARPN Journal of Engineering and Applied Sciences. 12(3): 638-647.

[24] Olsina L. 1998. Website Quantitative Evaluation and Comparison: Workshop on Software Engineering Over the Internet: International Conference on Software Engineering.

[25] Olsina L., Godoy D., Lafuente G., and Rossi G. 2001. Specifying Quality Characteristics and Attributes for Websites. Lecture Notes in Computer Science. 2016(1): 266-278.

[26] Africa A. 2017. A Rough Set-Based Expert System for diagnosing information system communication networks. International Journal of Information and Communication Technology. 11(4): 496-512.

[27] Africa A. 2017. A Mathematical Fuzzy Logic Control Systems Model Using Rough Set Theory for Robot Applications. Journal of Telecommunication, Electronic and Computer Engineering. 9(2-8): 7-11.

[28] AfricaA. and VelascoJ. 2017. Development of a Urine Strip Analyzer using Artificial Neural Network using an Android Phone. ARPN Journal of Engineering and Applied Sciences. 12(6): 1706-1712.