VOL. 13, NO. 16, AUGUST 2018 ISSN 1819-6608
ARPN Journal of Engineering and Applied Sciences

www.arpnjournals.com

DESIGN AND IMPLEMENTATION OF A DRYER TO CONTROL AND MONITOR THE DEHYDRATION PROCESS OF TOMATOES

Johan Julián Molina Mosquera, José Salgado Patrón and Diego F. Sendoya-Losada
Department of Electronic Engineering, Faculty of Engineering, Surcolombiana University, Neiva, Huila, Colombia
E-Mail: josesalgadop@usco.edu.co

ABSTRACT

This article presents the design and implementation of a prototype dryer. This device will be used for the control and monitoring of the process of dehydration of tomatoes in rural areas of the municipality of Neiva. For this, sensors for the acquisition and measurement of variables such as temperature, relative humidity and weight based on the platform of free hardware-Arduino, are used. The data recorded during the monitoring are stored in a micro SD memory of 4GB and in addition a database is created. An application that allows the user to monitor the drying process of the tomato in real time through the software visual studio ultimate 2013 and a web page that allows remote monitoring are also presented. The sensor data is sent via XBee devices to a computer for storage and viewing. The prototype has an alert system that activates when the levels measured by the sensors are not adequate. This ensures a good drying process for tomatoes. Finally, the internal ventilation of the dryer and the covering system once the dehydration process has finished is done through an automated door.

Keywords: arduino, control, dehydration, solar dryer, tomato.

1. INTRODUCTION

Fruits and vegetables play a very important role for humanity, because they contain vitamins, minerals, antioxidants, fiber and carbohydrates essential for nutrition. However, they are not available throughout the year, nor in all regions. Therefore, methods that allows to conserve their nutrients, as well as their properties, to have them available permanently, have been studied. One of the methods that have been applied is dehydration.

The dehydration of fruits and vegetables is one of the oldest and most used methods for their conservation. Dehydration consists of extracting the water contained in the food by physical means until the water level is adequate for its conservation for long periods; the water level is reduced to below 10%. This helps foods have a longer shelf life by reducing water activity, which inhibits microbial growth and enzyme activity. Reducing weight and volume in drying also reduces transport and storage costs (Sharma, 2003).

Tomato is the most widespread vegetable in the world and the most economical. Its demand increases continuously and with this its cultivation, production and commerce. Due to the high water content of the tomato (over 93%), this is a very perishable fruit in the short time. From this arises the need to seek alternatives with the support of dehydration technologies to preserve it (López, 1975).

The dehydration of the tomato is carried out by various methods, ranging from artisan to highly sophisticated and large scale. Dehydration reduces the water activity of the fruit, reducing the susceptibility to deterioration, but inducing a series of physical, chemical and bioactivity changes that affect its acceptability by the final consumer. The magnitude of these changes depends on the dehydration conditions (Ochoa *et al.*, 2013).

In areas with very dry climate, the process can be carried out in a traditional way. Here tomatoes are cut in half and placed on grids in the sun during the day, in covered places. During the night, they are collected to avoid nighttime humidity. This process takes place for two or three weeks, until the tomatoes dry. The main risk of this method is that these heat and humidity conditions favor the proliferation of insects (and their larvae), and food is exposed to them, as well as other environmental contamination (dust, spores, pollen, dirt) (Sacilik *et al.*, 2006). For the above reasons, sun drying evolved to be carried out indoors or different types of dehydrators where conditions could be more efficiently controlled. Today it is sought to prevent changes in food so that during the reconstitution products similar to the original foods are obtained.

Temperature plays an important role in drying processes. As its value increases, the elimination of moisture is accelerated within possible limits. The choice of temperature is carried out taking into consideration the species to be subjected to the process. Andritsos *et al.* (2003) states that tomato drying temperatures should be between 45 °C and 55 °C. This allows the product to retain its nutrients, including vitamins and lycopene. In 2003, Krokida *et al.* found that temperature is the most important variable in tomato drying.

The municipality of Neiva is in a region favored by having a warm and dry climate, with maximum temperatures of 40 ºC. These climatic conditions are ideal for the production of fruits and vegetables dehydrated in the sun, this in order to take advantage of the solar energy as a practically inexhaustible and free source of heat. For these reasons it is proposed to design and implement an automated prototype to dehydrate tomato, allowing monitoring and control of physical variables such as ambient temperature, relative humidity and weight. In addition to the use of extractors that cool the internal environment and expel moisture quickly, this project has as a working principle to protect the tomato from contamination, greater uniformity in drying, lower moisture content, better quality and shorter drying time.

Because it depends not only on the heat of the sun, but at night and in case of rain the tomato continues with its dehydration process using light bulbs that generate heat and maintain the appropriate temperature inside.

2. MATERIALS AND METHODS

In order to obtain a successful result and to satisfy the required needs, the control and monitoring system was divided into stages for development. The general scheme of the system is shown in Figure-1.

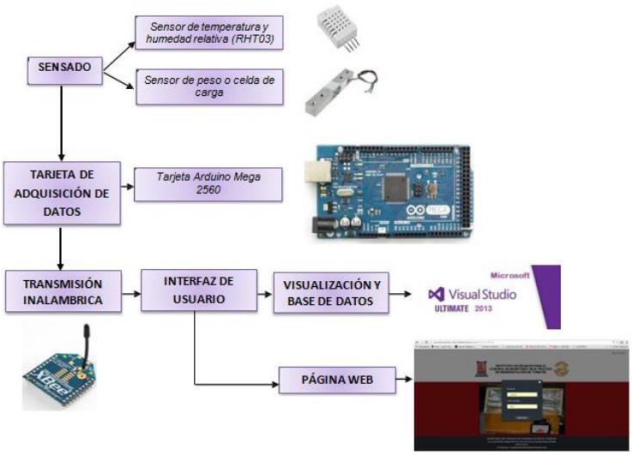

Figure-1. General scheme.

The design consists of four stages: the sensing stage where the measurement of physical variables such as weight, temperature and relative humidity is performed; the data acquisition stage, which reads, processes and conditions the signals from the sensors (Arduino boards); the transmission stage which sends data from the monitoring system to the final device; and the user interface stage.

The system has two fundamental parts, the first is the hardware, responsible for the acquisition of data and measurement of physical variables, and the second part, the Software, allows visualization to the user.

2.1 Hardware

The hardware of this project is light, relatively small for easy transportation, adhered to the dryer on one of its longitudinal sides, in such a way that it allows easy manipulation and portability. The electronic components that make up the circuit provide quality and reliability. The sensors must withstand the environmental conditions to which they are exposed.

2.1.1 Sensing stage

At this stage it is necessary to implement sensors that allow the detection of a physical quantity to convert it into an electrical variable. In order to obtain the acquisition and measurement of the required variables, the following sensors were implemented.

Humidity and temperature sensor

The RHT03 is a low-cost humidity and temperature sensor, its main advantage is to transmit the data in digital format. Its output is a calibrated digital signal that does not require additional components, just connect it to start taking measurements of relative humidity and temperature. The RHT03 works from 3.3V to 6V, so the 5V provided with the Arduino board are used. The sensor only needs an external pull-up resistor to easily work and read the data of a single pin (García, 2013). It uses its own serial communication protocol that occupies only one connection on one of its pins, for this reason it is necessary to use the technical information of the manufacturer to make a good communication. Because it uses only one pin to send relative humidity and temperature data, its data frame is made up of 40 bits.

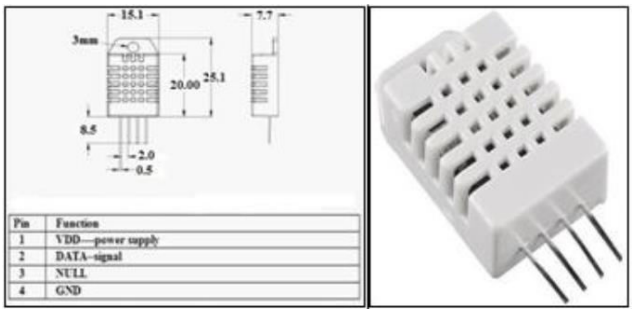

Figure-2. RHT03 sensor.

Fortunately, Arduino libraries that facilitate communication without having to think about the data frame that is sent and received have been developed. It is made up of a capacitive humidity sensor and a thermistor to measure the temperature. Measurements are performed every 2 seconds. It has a plastic encapsulation.

Weight sensor

A load cell is an electromechanical device; its operation is based on the deformation of a resistance embedded in the device, whose name is known as gauge. It is with other resistors forming a "Wheatstone bridge". When applying a DC or AC voltage between two opposite points of this bridge, and depending on the cell its mechanical deformation generates a variation in millivolts proportional to the applied voltage and the load or weight. The load cells have different geometric configurations, working in ranges from a few grams to hundreds of tons. They are usually made with steel or aluminum.

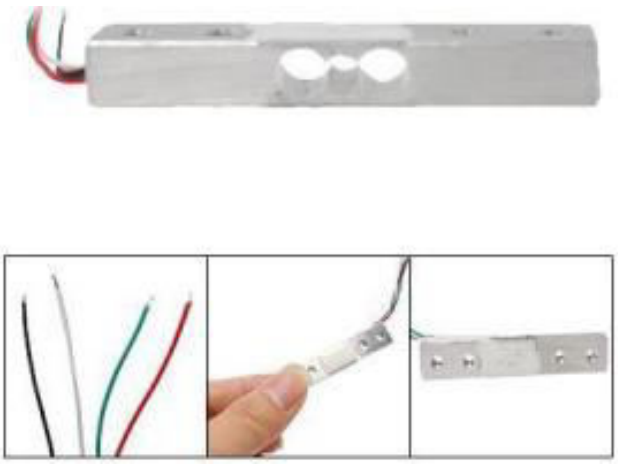

Figure-3. Weight sensor.

Features such as the maximum operating capacity, temperature range and operating voltage defined by the manufacturer have converted the selected load cell into the best alternative because it allows normal weighing operation of the tomatoes without exceeding the weight limits.

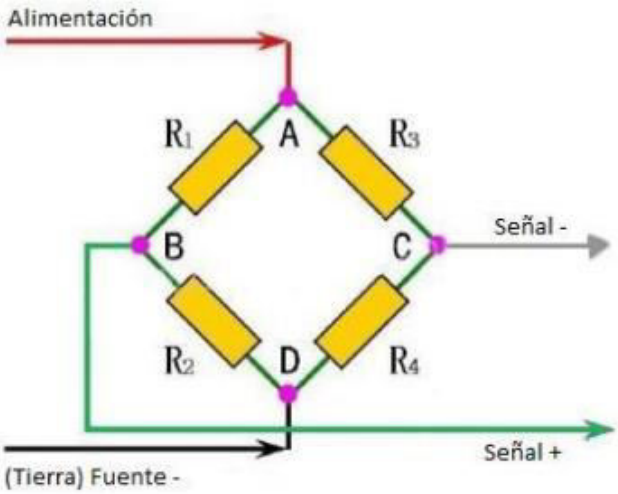

Figure-4. Load cell connection.

Analog/digital converter HX711

This is a module based on the ADX 24-bit HX711, specially designed to directly connect load cells. This facilitates the tasks of industrial automation where weight or force is measured. It supports up to two load cells and is compatible with Arduino, since it has a library very easy to use and calibrate for different types of load cell.

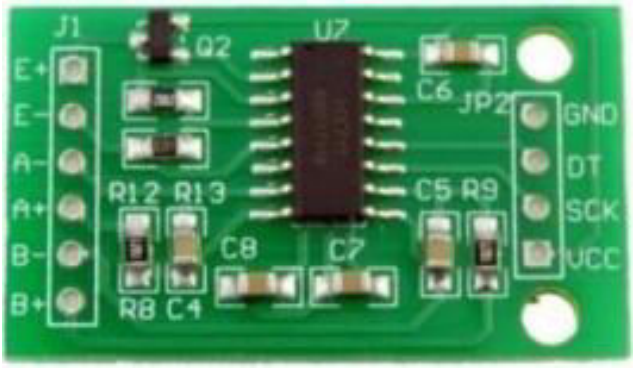

Figure-5. ADC Hx711 converter.

The HX711 conditions the resulting signal from the weight sensor to obtain an amplitude signal that satisfies the requirements of the digital analog conversion, since the voltage level obtained from the measuring bridge when the transducer resistance is varied is very (as in the Wheatstone Bridge).

Due to this, the importance of using the ADC Hx711 converter, based on the patented technology of AVIA semiconductor, was determined. The integrated has two differential input channels with low noise and programmable gain amplification (PGA), corresponding to the pins (A-, A +, B- and B +).

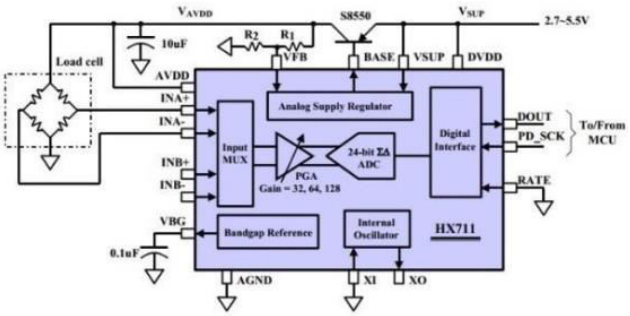

Figure-6. Weighing application with HX711.

2.1.2 Data acquisition board

In this stage you will find the Arduino boards that are used to receive the data supplied in the sensing stage. They read, process and condition the data to be sent by wireless transmission so that the user can visualize them.

Arduino mega 2560 board

Arduino is a brand of microcontrollers known worldwide where it makes available to users a wide range of devices based on the ATmega microcontroller. Arduino Mega 2560 has the ATmega2560 microcontroller, having 54 digital input/output pins and 16 analog inputs, a 16 MHz crystal oscillator, a USB connection port, a power connector, and a reset button.

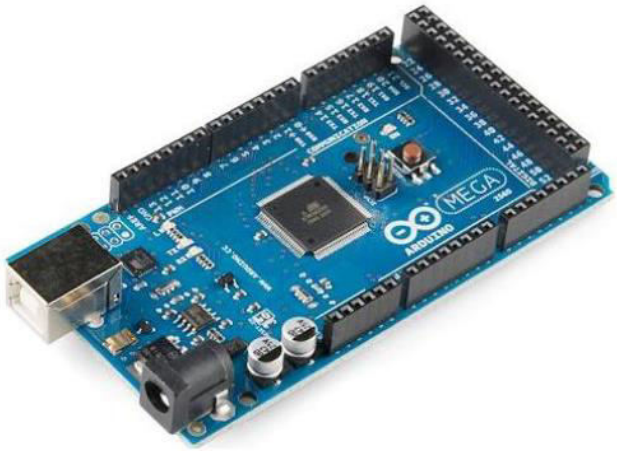

Figure-7. Arduino mega 2560 board.

This card is responsible for processing the data delivered by the sensors, the activation of the electrical system of the dehydrator conformed by the 75 W halogen reflecting bulbs and the 12V fan / extractor, in addition to the operation of the geared motor for opening and closing of the door. Its programming language consists of a development environment that implements the language Processing / Wiring, (Language based on C ++).

Mega sensor shield V2.2 board

The Arduino-compatible mega sensor shield v2.2 expansion card was selected as an alternative because it allows the connection of the XBee required for data transmission. It also makes use of the micro SD slot, where the monitoring data is stored. If for some reason the XBee transmission is affected, for example because the computer where the application is off, the data will not be lost because it has data storage support in the micro SD. It also includes a prototype area and breakouts of digital pins 14 through 53, and analog pins 6 through 15.

2.1.3 Door opening and closing system

In order to control the tomato dehydration process, it was necessary to perform an opening and closing system of an automatic door located at the base of the dehydrator. Its function is the internal ventilation of the dryer and the protection of the tomatoes once the process of dehydration has finished. This system consists of a geared motor to raise or lower the door through a bridge H.

With acrylic material was designed the door that conforms this system, where, by means of a pulley and an axis or screw without end is carried out the process of raising or lowering the door when the conditions established to carry out the control of the dryer requires it.

Figure-8. Opening and closing system of the door.

2.1.4 Internal dryer ventilation system

In this stage the internal ventilation system is made up of two 12V fans, whose function is to generate an air stream, which together with the automated door opening and closing system make possible the internal aeration of the dryer. A fan was placed in such a way as to operate as an extractor, facilitating the circulation of air and extracting moisture from the interior. It was necessary to use a screen that covered the fans avoiding the entry of insects into the dryer.

Figure-9. System of ventilation and extraction of the dryer.

2.1.5 Alarm system

The monitoring system provides an alarm, which indicates any fault or sensor levels outside the range. A reliable system was designed using a 4-12VDC buzzer, for this stage an external circuitry was required because the power required is greater than that supplied by the Arduino Mega 2560 board.

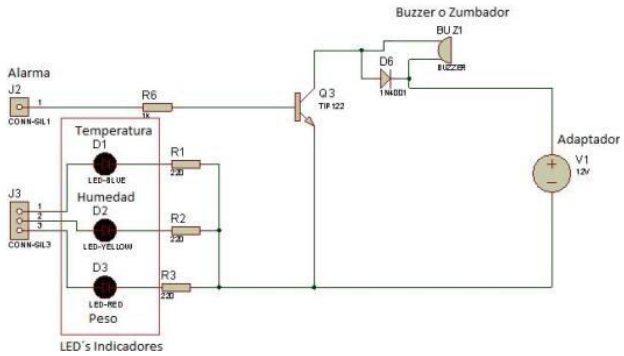

Figure-10. External circuitry for the alarm system.

This external circuit fulfills the function of creating an interface between Arduino and the buzzer, using an NPN transistor TIP122. This transistor essentially functions as an amplifier or as an electronic switch (switch or switch). Basically when a HIGH signal is sent to the base (B, control pin), the transistor changes and allows current to flow from the collector (C) to the emitter (E). The Arduino pins can only provide us with 5 Volts and 40 mA, which is not enough and makes this circuitry necessary.

2.1.6 Storage of data

During monitoring, it is required to store the data obtained by temperature, relative humidity and weight sensors, with the respective time and date. As mentioned above, the Mega sensor Shield V2.2 board is acquired because it has a MicroSD slot.

Data saved by means of a micro SD memory, allows the user to have a monitoring record. In addition, the data can be taken to any place where the application is not found with its local database, or there is no internet to access the web page. These data can be opened or exported to a spreadsheet to perform an analysis with their respective graphs on the behavior of the solar dryer.

For recording the time and date a reliable clock is maintained even when our Arduino is off is necessary. For this, a RTC DS3231 (Real Time Clock) was used. This module is based on the integrated circuitDS3231, which is an extremely accurate and temperature compensated real time clock (TCXO). It requires a lithium battery (included), which works for approximately 8 years, as long as the I2C interface is powered by 5V.

Figure-11. RTCDS3231 precision clock module.

2.1.7 Internal heating system

For the tomato dehydrator prototype, Halogen reflector bulbs Par 30 brand Nippon White were used, they are a direct replacement range for standard incandescent reflector lamps.

These bulbs were placed directly to each tray of the dryer, in such a way as to generate heat and thus contribute to the process of dehydration of tomatoes. It was necessary the use of an external circuitry using relays that allowed to isolate the power stage of the Arduino and thus to be able to connect them to the electrical network. This allows that with a small current like the one provided by Arduino, the reflectors can be turned on or off through these switches.

2.1.8 Data transmission stage

Today there are different forms of communication between electronic devices; the variety is even greater in the communication protocols available. Here arises the need to control the behavior of Arduino remotely because it allows to read data from a sensor in a place away from the PC, to allow wireless communication of two Arduino. An alternative is wireless communication through the ZigBee protocol designed by the ZigBee Alliance. ZigBee is a standard that defines a set of protocols for the creation of wireless short-distance and low-speed data networks. It operates in the 868 MHz, 915 MHz and 2.4 GHz bands and can transfer data up to 250Kbps (Dignani, 2011).

After having the above-mentioned steps, a system is required that allows data to be sent over a wireless transmission medium using two XBee 2.4Ghz Series2 modules. Mega sensor shield v2.2 was used as it allows to easily connect the XBee to interact directly with the Arduino board.

Figure-12. XBee module.

2.2 SOFTWARE

The project consists of three fundamental parts that are described below: Programming in Arduino, user interface (visualization and storage) and web server.

2.2.1 Arduino programming

The programming was done through the Arduino software on the Mega board 2560. Its operation is based on reading the ports where the sensors are connected, and

then it send the data through the serial ports through a wireless communication between the Arduino board and the PC. In the programming were established certain conditions that allow to obtain a control of the solar dehydrator, it was required the use of libraries that facilitate the obtaining of the data of the used sensors.

2.2.2 User interface

For the monitoring system of the tomato dehydration process the user interface was developed through Visual Studio Ultimate 2013 software based on C# programming language and a web page where its operating logic was developed in PHP.

The graphical user interface, also known as GUI is a computer program that acts as a user interface, using a set of images and graphic objects to represent the information and actions available in the interface. Using the C # programming language and the Windows Forms Designer used to create user interfaces quickly and easily, a desktop application was developed that allowed the visualization of the data recorded in real time and at the same time be stored in a local database.

The application developed in Visual Studio Ultimate 2013 mainly fulfills the following functions:

- Open and read the information on the serial COM port where the XBee module is connected.
- Organize information on variables in a clear and concise manner.
- Display the alarms that are presented during the process.
- Save the information in a previously created database.

Figure-13. Graphical user interface in visual studio C #.

It is possible to observe that the graphical interface is simple and pleasant for the user, allowing to see the list of available serial ports, the state of the communication, the real-time sensed variables and the alarms that are physically present in the prototype Synchronized with each other, in order to show the user what happens during the tomato drying process.

For the creation and administration of the database, XAMPP software is used, which is a free software independent server, consisting mainly of the MySQL database management system, the Apache web server and the interpreters for scripting languages: PHP and Perl. This is released under the GNU license and acts as a free web server, easy to use and able to interpret dynamic pages.

Figure-14. Database query interface.

2.2.3 Web page

The design of the web page was done in HTML5 (HyperText Markup Language) and its operating logic was developed in PHP, which is used to extract information from variables from the database, and chartphp to display this information together with the PHP variables (graphs).

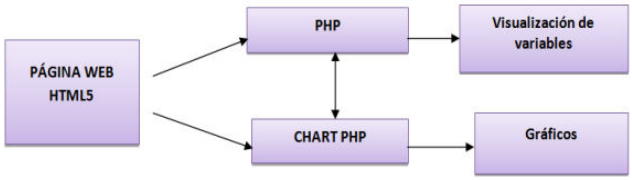

Figure-15. General scheme of the website.

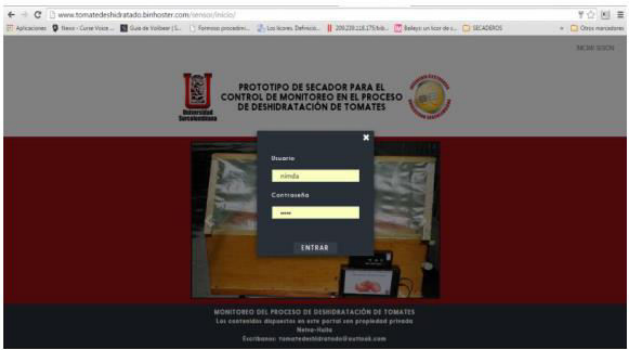

Figure-16. Homepage.

3. RESULTS AND DISCUSSIONS

Once all the sensors and other components that are part of this prototype were implemented, tests were performed to evaluate the performance and performance of the dryer. The results obtained from the drying process by the traditional method (direct exposure to the sun) and the results of the implemented prototype are shown below. Tomato was used as test, this product belongs to the group

of vegetables with a percentage of drying of 8-10% of humidity.

Figure-17. Prototype of solar tomato dryer.

Figure-18. Tomatoes exposed directly to the sun.

Figure-19. Tomatoes in the dryer trays.

After the tests of drying by the traditional method it was possible to conclude that:

- The dehydration process is slower than with the prototype implemented, because at night they are saved by increasing ambient humidity.
- Direct exposure of food to sunlight can be detrimental in quality (loss of natural color, destruction of vitamins and nutritional value) due to the action of ultraviolet rays.
- Tomatoes are exposed to dust, insects and other animals that can deteriorate and cause disease when they are consumed.

With the dehydration of the tomato through the implemented prototype, advantages were obtained regarding the drying time and the quality of the tomato. The parameters that determined a good visual quality of the finished product were the following:

- Intense red color
- Absence of white spots on the placenta
- Regular shape without breaks or deformations
- Size of tomatoes

The organoleptic characteristics were respected for their color, typical odor without past odor, their flavor remained and there was no presence of foreign matter because the tomatoes are covered and are not exposed directly to the environment.

Figure-20. Dehydrated tomato with presence of fungi or white spots on the placenta.

Figura-21. Dehydrated tomato with the prototype implemented.

Once the tomato dehydration was completed by both methods, they were stored in transparent polypropylene bags that allow the sealing to avoid rehydration by the humidity. Each bag is labeled with the following data: Test number, dehydration method, tomato type, dry weight, duration of the test and date of start of the test performed.

Figure-22. Storage and preservation of the dried product.

The built prototype provides the user with a novel tool to control and monitor the process of tomato dehydration very easily, allowing faster drying of food and improve the quality of the product dehydrated.

With the implementation of solar dehydrator and with alternating heating of halogen bulbs, it is possible to add value to surplus production in the region and thus to take advantage of the food by means of the oldest technique that is the method of solar dehydration. This avoids the waste of agricultural products, losses in crops over time, among other implications.

The most important criterion used to define the end of tomato drying is the residual moisture content, which does not have to exceed the indicated values. Being able to determine the right moment to finish the drying through the evolution of the weight of a sample of the product that is being dried. For this purpose a precision balance is required and the corresponding calculations are performed.

The application developed as part of the prototype implemented allows the user to store the data and the visualization of these registered in real time, ensuring the constant sending and receiving of information, to guarantee an uninterrupted monitoring. The use of the web page developed allows remote monitoring when the user is not close to the prototype implemented, it will have a record of the sensed data, visualize the data in real time and obtain the respective graphs of the variables of interest such as are temperature, humidity and weight. In addition, all the necessary information about the process will be available and the access control will be controlled by the user identification and password.

It is possible to conclude that the quality of the dehydrated product with the prototype implemented was superior to the traditional method, obtaining a greater speed of drying since it decreases its time of dehydration. Sanitary and nutritious conditions (in case of foods) are better because the product is not exposed to direct sunlight, rain, dust and insects.

REFERENCES

[1] Andritsos N., P. Damalapakis Kolios N. 2003. Use of geothermal energy for tomato drying. GHC Bulletin. 9-13.

[2] Avia Semiconductor. 2012. HX711: 24-Bit Analog-to-Digital Converter (ADC) for Weigh Scales. Consultado el 28 de agosto de 2015. http://www.dfrobot.com/image/data/SEN0160/hx711_english.pdf.

[3] Dignani J.P. 2011. Análisis del Protocolo ZigBee, Facultad de Informática, Universidad de la Plata.

[4] García M.R. 2013. Sistema de Control de Riego Automático Mediante el Monitoreo de Humedad del Suelo Vía Internet. Facultad de Ingeniería, Universidad Autónoma de Querétaro.

[5] Krokida M.K., Karathanos V.T., Maroulis Z.B., Marinos-Kouris D. 2003. Drying kinetics of some vegetables. J. Food Eng. 59, 391-403.

[6] López L., Antonio J. 1975. El tomate. Secretaría de Desarrollo y Fomento del Valle.

[7] Reyes E., Paz J., Cruz S., Junquera V., Martínez J., Arauza J.C., Aguilar C. 2013. Dehydration Technology for the Preservation of Tomato (Lycopersicon esculentum Mill). Revista de Ciencias Biológicas y de Salud. 39-46.

[8] Sharma S., Mulvaney S., Rivzi S. 2003. Ingeniería en Alimentos. Operaciones unitarias y prácticas de laboratorio. Limusa Wiley.

[9] Sacilik K., Keskin E.A., Konuralp R. 2006. Mathematical modelling of solar tunnel drying of thin layer organic tomato. J. Food Eng. 73, 231-238.