VOL. 13, NO. 19, OCTOBER 2018 ISSN 1819-6608
ARPN Journal of Engineering and Applied Sciences

www.arpnjournals.com

DESIGN ANALYSIS OF THE THERMAL CONDITIONS FOR CONTINUOUS CASTING AND EXTRUSION BASED ON A CONFORM UNIT WITH HORIZONTAL MOLD WHEEL

Skuratov Alexander P.[1], Belyaev Sergey V.[1], Gorokhov Yutij V.[1], Potapenko A. S.[1], Gubanov Ivan Y.[1], Popiyakova N. P.[1], Ivanov A. G.[1], Lesiv Elena M.[1], Kirko Vladimir I.[1,2] and Koptseva Natalia P.[1]
[1]Siberian Federal University, Krasnoyarsk, Russia
[2]Krasnoyarsk State Pedagogical University named after Victor Astafijev, Krasnoyarsk, Russia
E-Mail: kopceva63@mail.ru

ABSTRACT

The proximity mathematical model of complex heat exchange has been developed in the area of a conform unit a with horizontal mold for the continuous casting and extrusion of non-ferrous metals. The dynamics of the lead alloy extrusion have been studied at an experimental laboratory unit. The design temperatures for metal and elements of a prototype unit have been identified.

Keywords: conform unit, continuous casting, extrusion, mathematical model, heat exchange, lead alloy.

INTRODUCTION

One of the effective methods for the production of profiles is a combine process of continuous casting and extrusion in a single unit [1-4]. At present, several design types exist for the implementation of this technology [5-8]. One of the newest design developments is the pilot industrial conform unit for continuous casting and extrusion (CC&E) of metal using a horizontal mold wheel, a diagram of which is shown in (Figure-1).

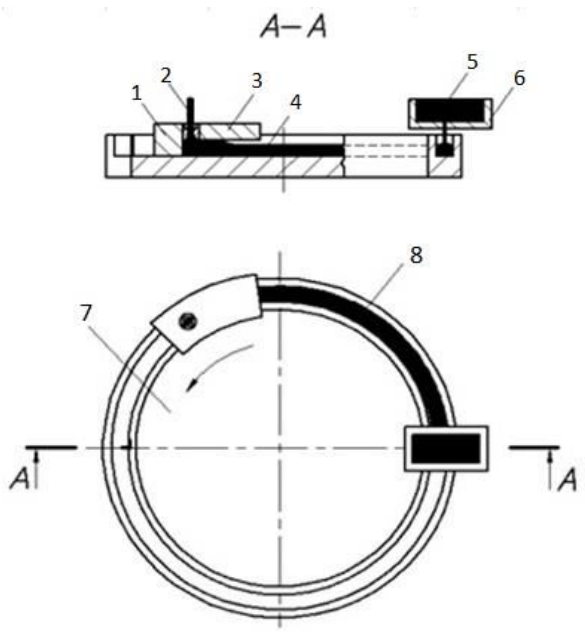

Figure-1. Diagram of continuous casting and extrusion on the conform unit using a rotating mold wheel: a - side view: 1- die back stop; 2 - molded piece; 3 - fixed arched segment (die holder); 4 - hardened ingot; 5 - metal melt; 6 - dosing mechanism. b - top view: 7 - mold wheel; 8 - circular slot.

The process is carried out in the following sequence: melted metal 5 is fed through dosing mechanism 6 into circular slot 8 of the rotating mold wheel 7 and is crystallized until it reaches the fixed arched segment 3 (die holder). Hardened ingot 4 reaches the die back stop 1 and is extruded into the die opening in the form of a molded piece 2.

The thermal conditions of the extrusion process in the zone of metal plastic deformation–including the initial temperature of the hardened ingot and tools, the output temperature of the profile–are among the major factors which affect the maximum performance and quality level of the profiles. Therefore, the study of thermal conditions during extrusion process is a topical objective for enabling the selection of rational modes of profiles production technology [9].

MATHEMATICAL MODEL OF THERMAL CONDITIONS DURING EXTRUSION IN THE CC AND E UNIT

Defining the thermal conditions during extrusion leads to the solution for the conjugate problem associated boundary value of unsteady heat conduction, which does not have a closed and exact solution: on the one hand, to determine the thermal conditions it is necessary to establish the deformation stress and its distribution throughout the whole volume of a deforming piece, and on the other hand, the deformation stress itself is largely dependent on the temperature [9].

To set up the problem of thermal conductivity we will consider the conditions for heat exchange in metal extrusion in the CC&E unit. Hardened metal that has a certain temperature moves when subjected to the active forces of friction in relation to a die holder with a constant speed followed by extrusion into the profile through the working opening in the die (Figure-2). The tool is cooled with the heat flow of intensity q_0 from the outer surface.

ARPN Journal of Engineering and Applied Sciences

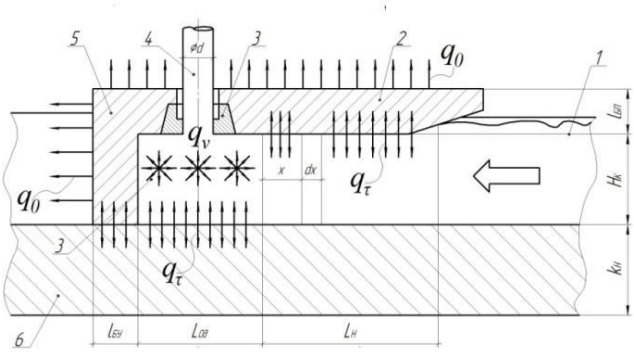

Figure-2. Diagram of heat interaction during metal extrusion: *1* - workpiece of height h_K; 2 - hold-down part of the die holder with thickness $l_{БП}$; 3 - die; 4 - molded piece in the form of a bar with diameter $\varnothing d$; 5 - die back stop of thickness $l_{БУ}$; 6 - slot of a mold wheel with bottom thickness k_H

The treated metal under the die holder can be nominally divided into two distinctive zones, distinguished by different thermodynamics: they are the deformation zone of length $L_{ОД}$ and active friction zone of length L_H. In addition, the area of the metal contact with the hold-down part of the die holder, the outer surface of the deformation zone and slot of the mold wheel is continuously exposed to a heat source from external friction forces of value q_τ, equal to [10]:

$$q_\tau = v_{пр}\tau, \tag{1}$$

where $v_{пр} = \left(R_K + \frac{b_K}{2}\right)\omega_K$ – is the speed of a relative movement of the workpiece against the tool; $\tau = \mu_i \overline{\sigma_S}$ - friction stress is subject to Siebel law; μ_i – coefficient of friction in the i-th zone; $\overline{\sigma_S}$ – average metal deformation stress in the i-th zone.

The deformation zone is exposed to a volumetric heat source from plastic forming of specific capacity q_V, equal to [10]:

$$q_V = \frac{\sigma_{ПР}}{t_Д} = \frac{\sigma_S b_K h_K \omega_K \left(R_K + b_K/2\right)\left[0,8 + \left(1,2 + \frac{\beta_{ПР}}{360^0}\right)\ln \lambda_{ПР}\right]}{V_{ОД}}, \tag{2}$$

where $\sigma_{ПР}$ - specific force of extrusion; $t_Д$ - deformation time in the deformation zone center.

Engineering calculation methods for temperature conditions are usually based on the heat balance equation [12]. The entire volume of a workpiece is divided into elementary blocks, the number of which depends on the nature of the problem under consideration: the number of specific zones by the intensity and location of heat sources in them. In the case of extruding in the CC&E unit, there are two blocks. The heat balance equation is made for each block:

$$\Delta Q_i = c_i \rho_i V_i (T_{i1} - T_{i0}), \tag{3}$$

where ΔQ_i - heat gained or lost by *i*-th block for the time interval Δt_i; c_i, ρ_i - heat capacity and density of the extruded metal; V_i - block volume; T_{i1}, T_{i0} - block temperature at the beginning and at the end of the time interval Δt_i.

Furthermore, on the basis of the Fourier equation's additivity property, which describes the propagation of heat in solids, the thermal process is considered a sum of independent and simpler thermal phenomena [11]. Thus, the average output temperature of the molded piece will be equal to the sum of temperature changes during passage of deformed metal through the specific thermodynamic zones during extrusion:

$$T_{ПР}(t_{ПР}) = T_{10} + \sum_{i=1}^{n} \Delta T_i(\Delta t_i), \tag{4}$$

where T_{10} - initial temperature of a workpiece before entering the die holder; $\Delta T_i = T_{i1} - T_{i0}$ - change in temperature of deformed metal during passage through the Δt_i *i*-th zone; $t_{ПР} = \sum_{i=1}^{n} \Delta t_i$ - total time of extrusion.

Thermal interaction during extrusion is extremely complex. Therefore, during the study of the thermal interaction between deformed metal and the extrusion tool we will make the following assumptions:

a) The materials of contacting bodies are homogeneous and isotropic during the whole deformation process.

b) Perfect thermal contact is ensured between the deformed metal and forging tool, while the equality of temperatures and heat flows is preserved.

c) The contacts of solids in all zones are exposed to constant heat sources of density q_τ.

d) The uniformly distributed volumetric heat sources with the specific capacity of q_V impact on the volume of the deformed metal.

e) The deformed metal and extrusion tool will be presented in the form of two bodies of the classical form, in the form of the semi-infinite space and infinite plate of thickness R with cooling of the outer lateral surfaces with the constant heat flow of density q_0 (Figure-3).

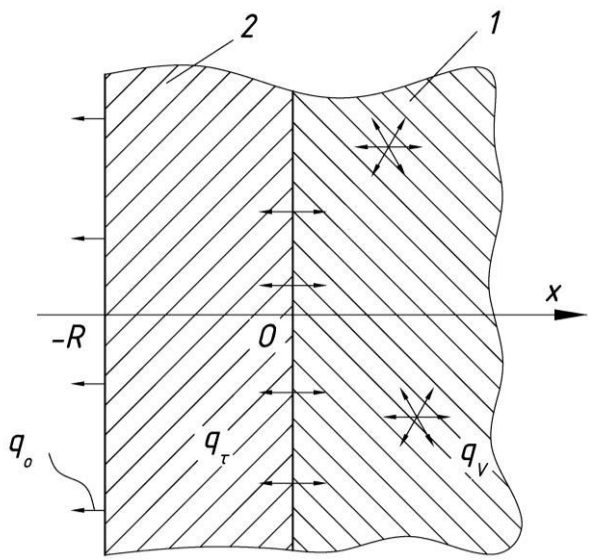

Figure-3. Design diagram of heat interaction between workpiece 1 and extrusion tool (die holder or slot in the wheel mold) 2 cooled with heat flow of density q_0

Under the assumptions made, the research of thermal interaction in contacting bodies can be reduced to the solution of the one-dimensional boundary value problem of unsteady heat conduction with boundary conditions of the second and the fourth kind [11].

The problem is set as follows. Let both bodies in the initial moment of the time (index 0) have different temperatures T_{10} and T_{20} (index 1 defines the parameters of the deformed metal, and index 2 defines those of the extrusion tool), are in fairly tight contact and carry out movement against each other. Frictional heat is given out on the boundary of these bodies' contact, i.e. a source of frictional heat is constantly in effect with a capacity of q_τ per unit of contact area, and the volume of the deformed metal is exposed to an evenly distributed heat source with the capacity of q_V per unit volume. The ideal thermal contact between bodies is provided on the boundary, i.e. the fourth kind of boundary conditions is observed.

It is necessary to identify an unsteady temperature distribution in each of the two bodies engaged in thermal interaction, if their thermal factors and characteristics are different.

One of the effective ways to solve this problem is the Laplace method of integral transforms in infinite limits. This method has several advantages over other classical methods [11]: standard application methods; gaining solutions in a convenient form for calculation and analysis; correspondence tables between originals and image functions, etc.

The origin of coordinates is set on the boundary of the contact. Then the problem statement is given in the mathematical form as a system of two differential equations of unsteady heat conduction:

$$\begin{cases} a_1 \dfrac{\partial^2 T_1(x,t)}{\partial x^2} - \dfrac{\partial T_1(x,t)}{\partial t} + \dfrac{q_v}{c_1 \rho_1} = 0, \ npu \ \ 0 \le x < +\infty, \\ a_2 \dfrac{\partial^2 T_2(x,t)}{\partial x^2} - \dfrac{\partial T_2(x,t)}{\partial t} = 0, \ npu \ \ -R \le x \le 0, \qquad t > 0 \end{cases} \tag{5}$$

with the following boundary conditions:

$$\begin{cases} T_1(x,0)=T_{10}, \quad T_2(x,0)=T_{20}, \\ T_1(0,t)=T_2(0,t), \\ T_1(\infty,t)-\text{ограничена}, \\ -\lambda_1\dfrac{\partial T_1(x,t)}{\partial x}-\lambda_2\dfrac{\partial T_2(x,t)}{\partial x}=q_\tau, \quad \text{при} \quad x=0, \\ \lambda_2\dfrac{\partial T_2(x,t)}{\partial x}=-q_0, \quad \text{при} \quad x=-R. \end{cases} \tag{6}$$

The solution of the set problem is performed using standard methodologies set forth in [11]; therefore, we immediately present the obtained solution that is consistent with the results [12]. Heat flows on the boundary contact of the bodies are defined using the following expressions:

- in the workpiece:

$$q_1(0,t)=\frac{4q_V b_2\sqrt{t}}{c_1\rho_1(k_2+1)^2}ierfc(\frac{R}{\sqrt{a_2 t}})+\frac{2q_\tau k_2}{(k_2+1)^2}erfc(\frac{R}{\sqrt{a_2 t}})+\frac{2b_2\Delta T_{ПР}}{(k_2+1)^2\sqrt{\pi\cdot t}}\exp[-(\frac{R^2}{a_2 t})]-$$
$$-\frac{2q_0}{k_2+1}erfc(\frac{R}{2\sqrt{a_2 t}})-\frac{2q_V b_2}{c_1\rho_1(k_2+1)}\sqrt{\frac{t}{\pi}}-\frac{b_2\Delta T_{ПР}}{(k_2+1)\sqrt{\pi\cdot t}}+\frac{q_\tau}{k_2+1}, \tag{7}$$

- in the extrusion tool:

$$q_2(0,t)=-\frac{4q_V b_2\sqrt{t}}{c_1\rho_1(k_2+1)^2}ierfc(\frac{2R}{2\sqrt{a_2 t}})-\frac{q_\tau k_2}{(k_2+1)^2}erfc(\frac{2R}{2\sqrt{a_2 t}})-\frac{2b_2\Delta T_{ПР}}{(k_1+1)^2\sqrt{\pi\cdot t}}\exp(-\frac{R^2}{a_2 t})+$$
$$+\frac{2q_0}{k_2+1}erfc(\frac{R}{2\sqrt{a_2 t}})+\frac{2q_V b_2}{c_1\rho_1(k_2+1)}\sqrt{\frac{t}{\pi}}+\frac{q_\tau k_2}{k_2+1}+\frac{b_2\Delta T_{ПР}}{(k_2+1)\sqrt{\pi\cdot t}}, \tag{8}$$

where c_1, ρ_1 - heat capacity and density of the extruded metal; $b_i=\sqrt{\lambda_i c_i \rho_i}$; λ_i; *and* $_i$ - factors of heat accumulation, thermal conductivity and heat diffusivity of materials in a workpiece (index 1), extrusion tool (index 2) correspondingly; $k_1=\frac{b_1}{b_2}; k_2=\frac{b_2}{b_1}$; $\Delta T_{ПР}=T_{10}-T_{20}$; T_{10} and T_{20} - initial temperature of the workpiece and extrusion tool; q_τ and q_V - the density of heat sources on the surface and in the volume of a workpiece.

During extrusion, the elementary blocks in the pressed metal undergo the following specific zones by the intensity of action and location of heat sources (Figure-2):

- active friction zone in the die holder on the approach to the deformation zone, where the surface heat sources from friction at the boundary contact of the die holder and workpiece impact $q_{ТРБ}$ and where there is a difference between the initial temperatures of the heating $\Delta T_{ПРБ}$. Between the workpiece and mold wheel slot the values mentioned above will be equal to zero;
- the deformation zone in the die holder exposed to surface heat sources from friction at the boundary surface contact of the deformation zone and mold wheel slot $q_{ТРК}$ and volumetric heat sources in the deformation zone $q_{VД}$;
- zone of the extruded metal located in the operating slot of the die exposed to surface heat sources from friction on the surface of the profile and the die $q_{ТРМ}$;
- outer surface of the extrusion tool is cooled with the constant heat flow of density q_0.

Thus, the output temperature of the molded article is defined as follows:

$$T_{ПР}(t_{ПР})=T_{10}+\Delta T_{1Б}(t_{1Б})+\Delta T_{1Д}(t_{1Д})+\Delta T_{1М}(t_{1М}), \tag{9}$$

where $t_{ПР}=t_{1Б}+t_{1Д}+t_{1М}$ – pressing time of the elementary block of metal; $\Delta T_{1Б}, \Delta T_{1Д}, \Delta T_{1М}$ - temperature change in the elementary metal block when passing through the above mentioned specific zones.

The component $\Delta T_{1Б}\left(t_{1Б}\right)$ is defined on the basis of the elementary block's heat balance. The heat balance equation for the elementary cylinder block dx from the heat exchange in this block will be as follows:

$$c_1\rho_1\Delta T_{1Б}\cdot h_K b_K\left(R_K+\frac{b_K}{2}\right)\varphi_H = F_Б\int_0^{t_{1Б}} q_{ТРД}(t)dt+\left(F_Б+F_K\right)\int_0^{t_{1Б}} q_0(t)dt\,, \tag{10}$$

where $F_Д$ and F_K – lateral surfaces of the die holder and slots in the mold wheel:

$$F_Б = b_K\left(R_K+\frac{b_K}{2}\right)\varphi_H\,, \tag{11}$$

$$F_K = F_{КД}+2F_{КС} = b_K\left(R_K+\frac{b_K}{2}\right)\varphi_H+2h_K\left(R_K+\frac{b_K}{2}\right)\varphi_H = \left(b_K+2h_K\right)\left(R_K+\frac{b_K}{2}\right)\varphi_H\,, \tag{12}$$

To calculate integrals $\int_0^t q_1(t)dt$ and $\int_0^t q_2(t)dt$ we use the property of Laplace integral transforms [11]: the integration of the inverse transform corresponds to the division of its image by parameter *p*:

$$\int_0^t q_1(0,t)dt = \frac{q_\tau t}{k_2+1}\left[1+\frac{8k_2}{k_2+1}i^2erfc(\frac{R}{\sqrt{a_2t}})\right]-\frac{4q_V b_2}{3c_1\rho_1(k_2+1)}\sqrt{\frac{t^3}{\pi}}\left[1-\frac{12\sqrt{\pi}}{k_2+1}i^3erfc(\frac{R}{\sqrt{a_2t}})\right]-$$
$$-\frac{8q_0t}{k_2+1}i^2erfc(\frac{R}{\sqrt{a_2t}})-\frac{2\Delta Tb_2}{k_2+1}\sqrt{\frac{t}{\pi}}\left[1-\frac{2\sqrt{\pi}}{k_2+1}ierfc(\frac{R}{\sqrt{a_2t}})\right], \tag{13}$$

$$\int_0^t q_2(0,t)dt = \frac{q_\tau k_2 t}{k_2+1}\left[1-\frac{8k_2}{k_2+1}i^2erfc(\frac{R}{\sqrt{a_2t}})\right]+\frac{4q_V b_2}{3c_1\rho_1(k_2+1)}\sqrt{\frac{t^3}{\pi}}\left[1-\frac{12\sqrt{\pi}}{k_2+1}i^3erfc(\frac{R}{\sqrt{a_2t}})\right]+$$
$$+\frac{8q_0t}{k_2+1}i^2erfc(\frac{R}{\sqrt{a_2t}})+\frac{2\Delta Tb_2}{k_2+1}\sqrt{\frac{t}{\pi}}\left[1-\frac{2\sqrt{\pi}}{k_2+1}ierfc(\frac{R}{\sqrt{a_2t}})\right]. \tag{14}$$

$$\int_0^{t_{1Б}} q_{ТРБ}(t)dt = \frac{q_{ТРБ}t_{1Б}}{k_2+1}\left[1+\frac{8k_2}{k_2+1}i^2erfc(\frac{R}{\sqrt{a_2t_{1Б}}})\right]-\frac{2\Delta T_{ПРБ}b_2}{k_2+1}\sqrt{\frac{t_{1Б}}{\pi}}\left[1-\frac{2\sqrt{\pi}}{k_2+1}ierfc(\frac{R}{\sqrt{a_2t_{1Б}}})\right]-$$
$$-\frac{8q_0t_{1Б}}{k_2+1}i^2erfc(\frac{R}{\sqrt{a_2t_{1Б}}}), \tag{15}$$

$$\int_0^{t_{1Б}} q_0(t)dt = \frac{8q_0t_{1Б}}{k_2+1}i^2erfc(\frac{R}{\sqrt{a_2t_{1Б}}})\,. \tag{16}$$

Substituting the values found we determine the elementary metal block temperature change when passing $t_{1Б}$ the active friction zone in the die holder on approach to the deformation zone:

$$\Delta T_{1Б} = \frac{t_{1Б}}{c_1\rho_1h_K\left(k_2+1\right)}\{q_{ТРБ}\left[1+\frac{8k_2}{k_2+1}i^2erfc(\frac{l_{БП}}{\sqrt{a_2t_{1Б}}})\right]-\frac{2\Delta T_{ПРБ}b_2}{\sqrt{\pi t_{1Б}}}\left[1-\frac{2\sqrt{\pi}}{k_2+1}ierfc(\frac{l_{БП}}{\sqrt{a_2t_{1Б}}})\right]-$$
$$-8q_0[i^2erfc(\frac{l_{БП}}{\sqrt{a_2t_{1Б}}})+i^2erfc(\frac{k_H}{\sqrt{a_2t_{1Б}}})+2\frac{h_K}{b_K}i^2erfc(\frac{k_C}{\sqrt{a_2t_{1Б}}})]\}, \tag{17}$$

where $t_{1Б} = \varphi_H/\omega_K$.

Using the equation of heat balance by volume we find the temperature change in this thermodynamic zone:

$$c_1\rho_1\Delta T_{1Д}\cdot h_K b_K\left(R_K+\frac{b_K}{2}\right)\varphi_{ОД}=V_{ОД}\int_0^{t_{1Д}}q_V(t)dt+F_K\int_0^{t_{1Д}}q_{ТРД}(t)dt-\left(F_Б+F_K\right)\int_0^{t_{1Д}}q_0(t)dt\,, \tag{18}$$

$$\begin{aligned}\Delta T_{1Д}&=\frac{q_V}{c_1\rho_1}+\frac{t_{1Д}}{c_1\rho_1 h_K\left(k_2+1\right)}\{q_{ТРД}\left[1+\frac{8k_2}{k_2+1}i^2erfc(\frac{k_H}{\sqrt{a_2t_{1Д}}})\right]-\\&-\frac{4q_Vb_2}{3c_1\rho_1}\sqrt{\frac{t_{1Д}}{\pi}}\left[1-\frac{12\sqrt{\pi}}{k_2+1}i^3erfc(\frac{k_H}{\sqrt{a_2t_{1Д}}})\right]-8q_0i^2erfc(\frac{k_H}{\sqrt{a_2t_{1Д}}})\}+\\&+\frac{2t_{1Д}}{c_1\rho_1b_K\left(k_2+1\right)}\{q_{ТРД}\left[1+\frac{8k_2}{k_2+1}i^2erfc(\frac{k_C}{\sqrt{a_2t_{1Д}}})\right]-\frac{4q_Vb_2}{3c_1\rho_1}\sqrt{\frac{t_{1Д}}{\pi}}\left[1-\frac{12\sqrt{\pi}}{k_2+1}i^3erfc(\frac{k_C}{\sqrt{a_2t_{1Д}}})\right]-\\&-8q_0i^2erfc(\frac{k_C}{\sqrt{a_2t_{1Д}}})\}.\end{aligned} \tag{19}$$

The temperature change when the extruded metal passes through the working slot of the die is defined in the same way as when the metal enters the deformation zone:

$$\Delta T_{1M}=\frac{t_{1M}\Pi_{ПР}}{c_1\rho_1F_{ПР}(k_4+1)}(q_{ТРМ}\cdot k_4-\frac{2\Delta T_{МПР}\cdot b_1}{\sqrt{\pi\cdot t_{1M}}}), \tag{20}$$

where $\Pi_{ПР}, F_{ПР}$ – perimeter and area of the profile cross section; $k_4=b_1/b_4$; $\Delta T_{МПР}$ - temperature difference between the profile and the die;

$$q_{ТРМ}=\mu_M\lambda_K v_{ПР}\sigma_{SM}\,, \tag{21}$$

where μ_M - friction factor on the surface of the die parallel land;

$$t_{1M}=\frac{h_{CP}}{\lambda_K\cdot v_{ПР}}=\frac{h_{CP}}{\lambda_K\omega_K(R_K+b_K/2)}, \tag{22}$$

where h_{CP} - average height of the die parallel land.

By substituting the values found for the changes in temperature of the elementary block when passing through specific zones during extrusion into the expression (4), we find the output temperature of the molded articles:

$$\begin{aligned}T_{ПР}(t_{ПР})&=T_{10}+\frac{t_{1Б}}{c_1\rho_1h_K\left(k_2+1\right)}\{q_{ТРБ}\left[1+\frac{8k_2}{k_2+1}i^2erfc(\frac{l_{БП}}{\sqrt{a_2t_{1Б}}})\right]-\frac{2\Delta T_{ПРБ}b_2}{\sqrt{\pi t_{1Б}}}\left[1-\frac{2\sqrt{\pi}}{k_2+1}ierfc(\frac{l_{БП}}{\sqrt{a_2t_{1Б}}})\right]-\\&-8q_0[i^2erfc(\frac{l_{БП}}{\sqrt{a_2t_{1Б}}})+i^2erfc(\frac{k_H}{\sqrt{a_2t_{1Б}}})+2\frac{h_K}{b_K}i^2erfc(\frac{k_C}{\sqrt{a_2t_{1Б}}})]\}+\frac{q_V}{c_1\rho_1}+\\&+\frac{t_{1Д}}{c_1\rho_1h_K\left(k_2+1\right)}\{q_{ТРД}\left[1+\frac{8k_2}{k_2+1}i^2erfc(\frac{k_H}{\sqrt{a_2t_{1Д}}})\right]-\frac{4q_Vb_2}{3c_1\rho_1}\sqrt{\frac{t_{1Д}}{\pi}}\left[1-\frac{12\sqrt{\pi}}{k_2+1}i^3erfc(\frac{k_H}{\sqrt{a_2t_{1Д}}})\right]-\\&-8q_0i^2erfc(\frac{k_H}{\sqrt{a_2t_{1Д}}})\}+\frac{2t_{1Д}}{c_1\rho_1b_K\left(k_2+1\right)}\{q_{ТРД}\left[1+\frac{8k_2}{k_2+1}i^2erfc(\frac{k_C}{\sqrt{a_2t_{1Д}}})\right]-\\&-\frac{4q_Vb_2}{3c_1\rho_1}\sqrt{\frac{t_{1Д}}{\pi}}\left[1-\frac{12\sqrt{\pi}}{k_2+1}i^3erfc(\frac{k_C}{\sqrt{a_2t_{1Д}}})\right]-8q_0i^2erfc(\frac{k_C}{\sqrt{a_2t_{1Д}}})\}+\frac{t_{1M}\Pi_{ПР}}{c_1\rho_1F_{ПР}(k_4+1)}(q_{ТРМ}\cdot k_4-\frac{2\Delta T_{МПР}\cdot b_1}{\sqrt{\pi\cdot t_{1M}}}).\end{aligned} \tag{23}$$

When implementing the technology of continuous casting and extrusion, the most important thing is to ensure the isothermal output temperature of the profile through the creation of stable thermal conditions for the extrusion tool work. The latter can be ensured thanks to the constant initial temperature of crystallization for the treated metal fed under the die holder. This temperature stabilization is achieved through the balance of the input and output heat due to, for example, the forced cooling of the extrusion tool. The solution to this problem

requires the establishment of mathematical calculation models of not only the output temperature of the profile, but also that of the extrusion tool.

Particularly operates in the severe heat conditions, the fixed die holder [13], unlike mold wheel slots, is in constant contact with the metal during the process of its deformation. The volume of the die holder by analogy with the deformed metal can also be divided into three specific thermodynamic zones:

- the active friction zone in the die holder on approach to the deformation zone, where the surface heat sources from friction at the boundary contact of the die holder and workpiece impact $q_{TPБ}$ and there is a difference between the initial heating temperatures $\Delta T_{ПРБ}$;
- part of the die holder in contact with the deformation zone where powerful volume heat sources impact during metal deformation;
- the back stop, the most loaded part with the most thermal stress in the die holder in contact with the deformation zone and moving mold wheel slot, where surface heat sources from friction impact on the boundary of the contact.

Practical interest in developing the technology is focused on the change in temperature of a mold wheel during its presence in the die holder location zone. The mold wheel passes through three thermodynamic zones along with the die holder, differing in location and heat source intensity:

- active friction zone in the die holder where no thermal effects influence the wheel mold;
- mold wheel zone in contact with the deformation zone exposed to powerful volume heat sources, and surface heat sources from friction on the boundary of the contact;
- mold wheel zone in contact with the fixed back stop of the die holder exposed to surface heat sources from friction on the boundary of the contact.

Let us note that in general, the temperature of the T_i objects under consideration (tools and deformed metal) results from the initial temperature of their heating T_{i0}, the temperature increase due to the deformation heating $\Delta T_{iД}$ and the temperature drop due to forced air cooling of the tool $\Delta T_{iПО}$:

$$T_i = \Delta T_{i0} + \Delta T_{iД} - \Delta T_{iПО} = T_{iРАЦ} \pm \Delta T_i < (0,8 \div 0,9) T_{iKP}, \quad (24)$$

where $T_{iРАЦ}$ - rational value of the object temperature i; T_{iKP} - solidus temperature of the deformed metal.

Applying the relationships obtained above contributed to the development of the algorithm to calculate the thermal conditions of the CC&E unit in the extrusion zone of the treated metal, and by analogy, the mold wheel and specific parts of the die holder. Based on this algorithm the software product to calculate thermal parameters for the metals in the CC&E process has been developed [14-16].

SUMMARY OF RESULTS

As an example, Figure-4 displays the results of the thermal calculation process for the deformation of lead rods with a diameter of $d_{ПР} = 6,0$ mm, obtained according to the scheme shown in Figure-1, from a 10 × 10 mm ingot. The circular slot is made with an average diameter of 300 mm; the wheel rotation speed is 4 rpm. The length of the die holder is 165 mm, which includes a back stop part of 15 mm in length.

Analysis of the results obtained revealed as follows:

- during the deformation the temperature increases intensively both in the deformed metal and the tool, especially the part of the die holder, which is in contact with the metal in the deformation zone;
- forced cooling of the outer surface of the die holder does not provide isothermal working conditions for both the tool and the output temperature of the rod;
- it is necessary to use more intensive cooling for the die holder by bringing the cooling zone closer to the heat sources, taking the desired strength of the tool into account.

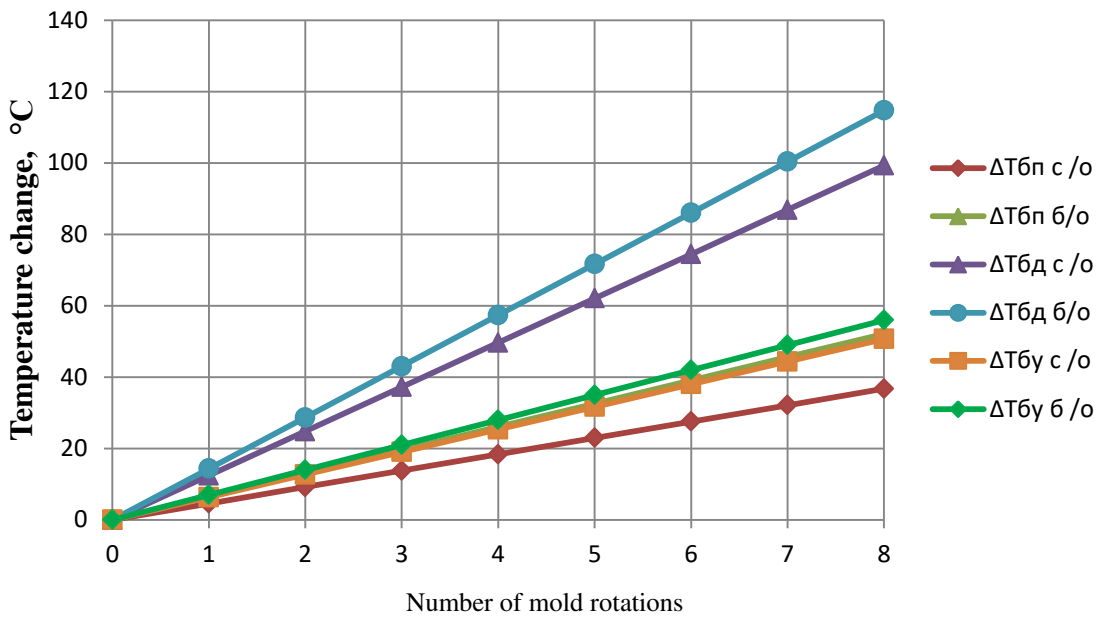

Figure-4. Temperature change of the deformed metal and tool during the manufacture of a lead rod with a diameter of $d_{ПР} = 6,0$ mm: (w/c) and (wo/c) – with and without cooling the outer surface of the die holder; temperature change: $\Delta T_{БП}$ and $\Delta T_{БД}$ – of the die holder in the active friction zone and in the deformation zone; $\Delta T_{БУ}$ – back stop of the die holder

The figures on the horizontal axis of the coordinate system in Figure-4 correspond to the number of wheel rotations with the lead melt casted into the slot. The total travel time of the crystallized metal under the die holder *t*, at the speed *n* = 8 is 2 min. The ingot temperature when coming under the die holder is maintained at 100 °C. Forced cooling of the outer surface of the die holder is carried out with running water at a rate of $q_0 = 46,5$ kW/m^2.

Design parameters favorably coincide with the results of experiments, subject to deviation that made up no more than 10%, which confirms the accuracy of the obtained solutions and the mathematical model developed.

CONCLUSIONS

The proximity mathematical model of complex heat exchange in the extrusion zone of the continuous casting and extrusion unit for non-ferrous metals with a horizontal mold has been developed.

It has shown that it is important to create isothermal conditions for both the die holder and the die and the output temperature of the profile for the realization of the continuous combine casting process and extrusion. In doing so, the tool temperature value should correspond to the temperature at which it possesses the necessary strength. For the deformed metal, this temperature should be less than the solidus line of the deformed metal when the heat deformation resistance is minimal and there is maximum ductility.

It has been established that the basic governing parameters for the thermal conditions in the process of combine casting and extrusion are the initial temperature of heating and how long the metal is kept in the die holder, which is linearly dependent on the angular velocity of the wheel rotation and the intensity of the forced cooling elements in the unit. Varying the given parameters in the mathematical relationships established it is possible to define the rational technological process mode.

REFERENCES

[1] Gorokhov Yu.V., Belyaev S.V., Uskov I.V., Gubanov I.Yu. 2014. Development of combine continuous casting and extrusion. Journal of the Siberian Federal University. 7(4): 438-444.

[2] Sidelnikov S.B., Dovzhenko N.N., Zagirov N.N. 2005. Combined and combined methods of non-ferrous metals and alloys. Moscow: MAKS Press.

[3] Gorokhov Yu.V., Sherkunov V.G., Konstantinov I.L. 2015. The Research Methodology of Continuous Press-Casting of Metals. Journal of South Urals Technical University. 2: 82-88.

[4] Sidelnikov S.B., Gorokhov Y.V., Belyaev S.V. 2015. Innovative Combined Technology in Metal Treatment. Journal of the Siberian Federal University, Series: Engineering and Technologies. 8(2): 185-191.

[5] Bogdanov D.V., Belyaev, S.V., Gubanov, I.Yu, Vinogradov O.O. 2015. Research into the conditions of combine continuous casting and extrusion by CONFORM method. Journal of the Siberian Federal University, Series: Engineering and Technologies. 8(5): 576-581.

[6] Gorokhov Y.V., Belyaev S.V., Gubanov I.Y., Konstantinov I.L. 2016. Continuous casting and pressing line for non-ferrous metals. Non-ferrous metals. 3: 69-74.

[7] Gorokhov Y.V., Belyaev S.V., Gubanov I.Y., Uskov I.V., Ivanov A.G., Lesiv E.M. 2017. Provision of Stable Operation of a Combined Casting-Extrusion Unit for Nonferrous Metals. Metallurg. 3: 67-69.

[8] Skuratov A.P., Potapenko A.S., Gorokhov Yu.V. 2017. The Research of Thermal Operations in the Equipment of Continual Casting & Aluminum Extrusion in Transitional Mode. Journal of the Siberian Federal University, Series: Engineering and Technologies. 10(3): 337-345.

[9] Tretyakov A.V. 1973. Mechanical properties of metals and alloys in pressure treatment. Moscow: Metallurgy.

[10] Suyarov D.I. 1976. Mechanics of plastic continuum. Krasnoyarsk, Krasnoyarsk Book Publishing House.

[11] Lykov A.V. 1967. Theory of thermal conductivity. Moscow: Vysshaya Shkola.

[12] Dovzhenko N.N., Belyaev S.V., Sidelnikov S.B. 2009. Extrusion of aluminium alloys: modeling and management of thermal conditions. Krasnoyarsk: Publishing and Printing Complex of the Siberian Federal University.

[13] Gorokhov Y.V., Sherkunov V.G., Dovzhenko N.N., Belyaev S.V., Dovzhenko N.N. 2013. Basics of designing processes of continuous extrusion of metals. Krasnoyarsk: Siberian Federal University.

[14] Potapenko A.S., Skuratov A.P., Gorokhov Yu.V., Gubanov I. Yu. 2017. Calculation of temperature fields at the metal crystallization in the strain of Conform-Castex unit. Certificate of State Registration of the Application Software No 2017614574 from April 19, 2017.

[15] Kirko V.I., Dobrosmyslov S. S., Nagibin G. E., and Koptseva N. P. 2016. Electrophysical-mechanical properties of the composite SnO2-Ag (Semiconductor-metal) ceramic material. ARPN Journal of Engineering and Applied Sciences. 11(1): 646-651.

[16] Uskov I.V., Belyaev S.V., Uskov D.I., Gilmanshina T.R., Kirko V.I., Koptseva N.P. 2016. Next-Generatiom Technologies of Manufacturing of Waveguides from Aluminum Alloys. ARPN Journal of Engineering and Applied Sciences. 11(21): 12367-12370.