VOL. 13, NO. 21, NOVEMBER 2018 ISSN 1819-6608
ARPN Journal of Engineering and Applied Sciences

www.arpnjournals.com

ANALYSIS OF BRANCHED ASPIRATION DUCTS NETWORKS WITH SWIRLING FLOW OF GAS AND DUST PASSING THROUGH THE DUCTS

Dmitry P. Borovkov[1], Elena O. Cherevychenko[2], Konstantin O. Chichirov[3] and Alexander G. Averkin[3]
[1]Volgograd State Technical University, Volgograd, Russian Federation
[2]VolgogradNIPImorneft, LLC, Volgograd, Russian Federation
[3]Penza State University of Architecture and Construction, Penza, Russian Federation
E-Mail: olegovich.79@mail.ru

ABSTRACT

The paper describes a method of aerodynamic analysis of branched aspiration networks with swirling flow in air ducts. The proposed technique is based on equivalent local resistances method. The proposed method is intended for aspiration networks in which tangential swirling device are used instead of standard tees. This technique makes it possible to obtain exact values of aspiration gas flow passing through parallel sections of the duct network, without any recourse to iterative methods.

Keywords: air ducts, aspiration system, swirling flow, aerodynamic analysis, pressure loss, local resistance coefficient.

INTRODUCTION

In some cases, dust is deposited in horizontal and inclined air ducts in the course of operation of aspiration systems. At that, decrease of clear cross section of the aspiration flow and increase in the aerodynamic resistance of the aspiration network take place which can lead to misalignment and shutdown of the aspiration system over time. A promising method to prevent formation of dust deposits in the air ducts of aspiration systems is swirling of aspiration flow [1-4].

The swirling gas flow is characterized by increased ability to entrain and transport solid dust particles that improves conditions for dust-like particles movement and prevents formation of dust deposits in the air ducts of aspiration systems and this does not require significant changes in the aspiration network and application of complex and expensive equipment [5-9]. However, implementation of aspiration systems with swirling flows in construction materials industry is currently difficult due to lack of necessary technical solutions, as well as design and calculation methods [10, 11].

MATERIALS AND METHODS

When performing the reverse aerodynamic analysis of unbranched aspiration and ventilation networks, as a rule, a method of characteristic is used; the essence of this method is that a system of equations consisting of an equation characterizing change in pressure losses of the gas (air) flow when the gas passes through the air duct, depending on the volume of the gas passing through, and an equation characterizing pressure characteristic of the draft device is solved. For the equations, generally accepted dependencies characterizing aerodynamic resistance of various elements of ventilation systems and specifications of draft devices are used, so the characteristic method application for unbranched networks is not difficult [11, 12].

Situation is quite different for reverse aerodynamic analysis of branched network. The main difficulty is associated with evaluation of the local resistance coefficients for tees for the cases of main outlet and second angle way (Figure-1) because their values depend on the ratio of flow rates in parallel sections of the network which is just a purpose of the reverse aerodynamic analysis.

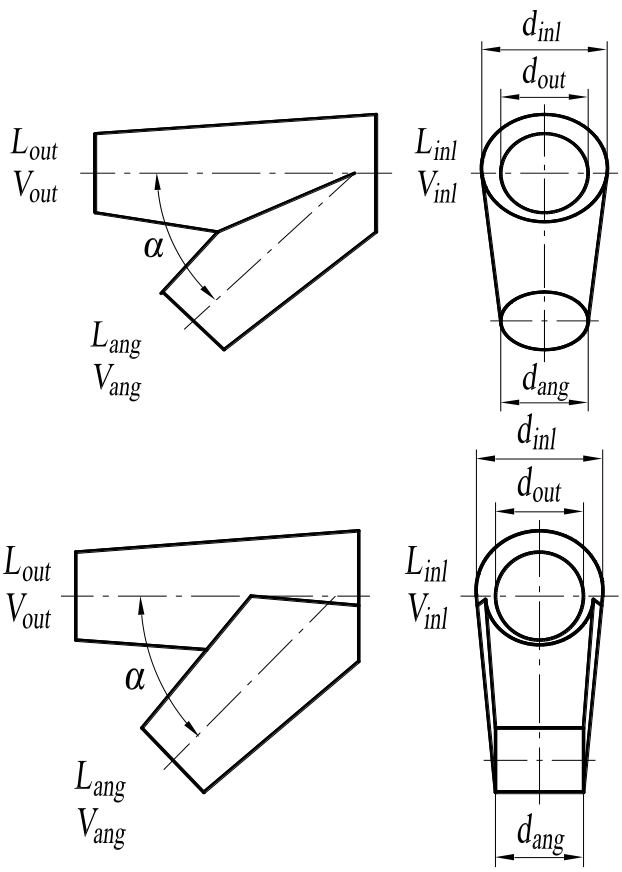

Figure-1. Designations for main characteristics of swirling device tees.

According to the standard method [13], local resistance coefficients of tee for the cases of main outlet and second angle way ξ_{out} and ξ_{ang} are defined based on tabulated experimental data as a function of difference between the main outlet and inlet diameters; difference of second angle way and inlet diameters; angle between main outlet and second angle way, and also ratio of flow rates in second angle way and inlet. It is obvious that, at inverse calculation, only flow rates ratio changes but design characteristics of the tee are constant, so it seems reasonable, for calculation automation, to characterize the local resistance coefficients of tees by one-dimensional regression dependences of $\xi = f\left(L_{ang}/L_{inl}\right)$ form for different combinations of design factors. Practice shows that the data obtained empirically and characterizing the aerodynamic resistance coefficients of the main outlet and second angle way of the flow swirling tees are adequately approximated by the third degree polynomials $b_3 \cdot x^3 + b_2 \cdot x^2 + b_1 \cdot x + b_0$ for all mentioned combinations of design factors [14, 15]. Results of the experimental evaluation of the local resistance coefficients for the flow swirling tees for main outlet and second angle way are given Figures 2 and 3.

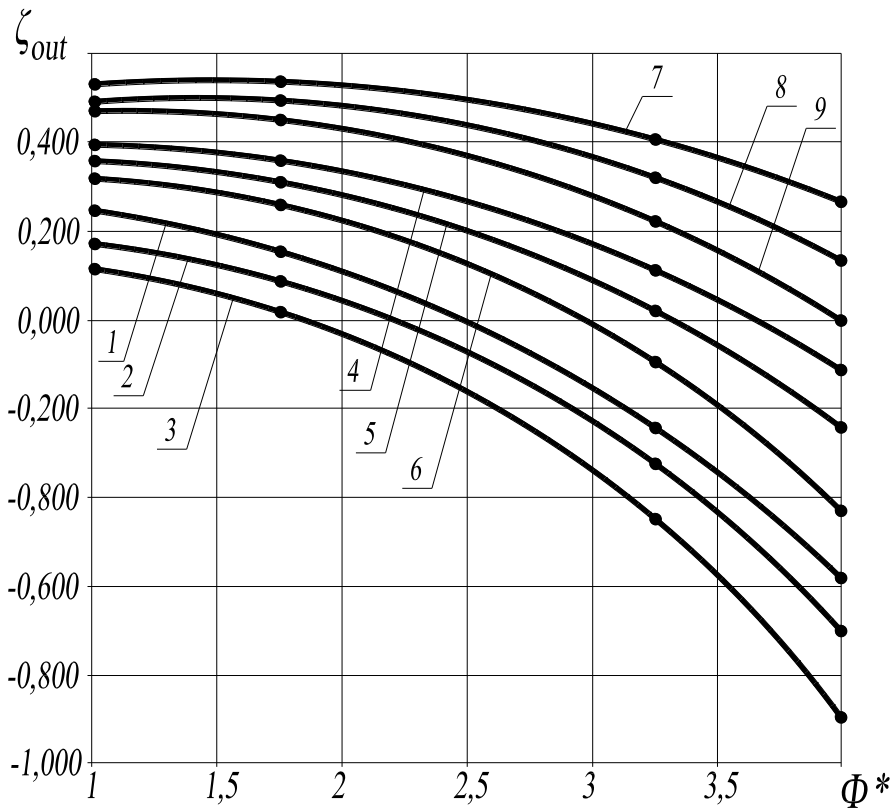

Figure-2. Dependence of local resistance coefficient for main outlet flow through the tee swirling device with pipe second angle way, having a round cross section, connected at angle α = 30° on integrated swirling parameter and ratio of flow rates in inlet and in second angle way, for different diameters of second angle way ξ_{out} $(\Phi^*; L_{ang}/L_{inl}; d_{ang}/d_{inl})$: 1 – d_{ang}/d_{inl} = 0,5, L_{ang}/L_{inl} = 0,4; 2 – d_{ang}/d_{inl} = 0,5, L_{ang}/L_{inl} = 0,55; 3 – d_{ang}/d_{inl} = 0,5, L_{ang}/L_{inl} = 0,7; 4 – d_{ang}/d_{inl} = 0,75, L_{ang}/L_{inl} = 0,4; 5 – d_{ang}/d_{inl} = 0,75, L_{ang}/L_{inl} = 0,55; 6 – d_{ang}/d_{inl} = 0,75, L_{ang}/L_{inl} = 0,7; 7 – d_{ang}/d_{inl} = 1, L_{ang}/L_{inl} = 0,4; 8 - d_{ang}/d_{inl} = 1, L_{ang}/L_{inl} = 0,55; 9 – d_{ang}/d_{inl} = 1, L_{ang}/L_{inl} = 0,7

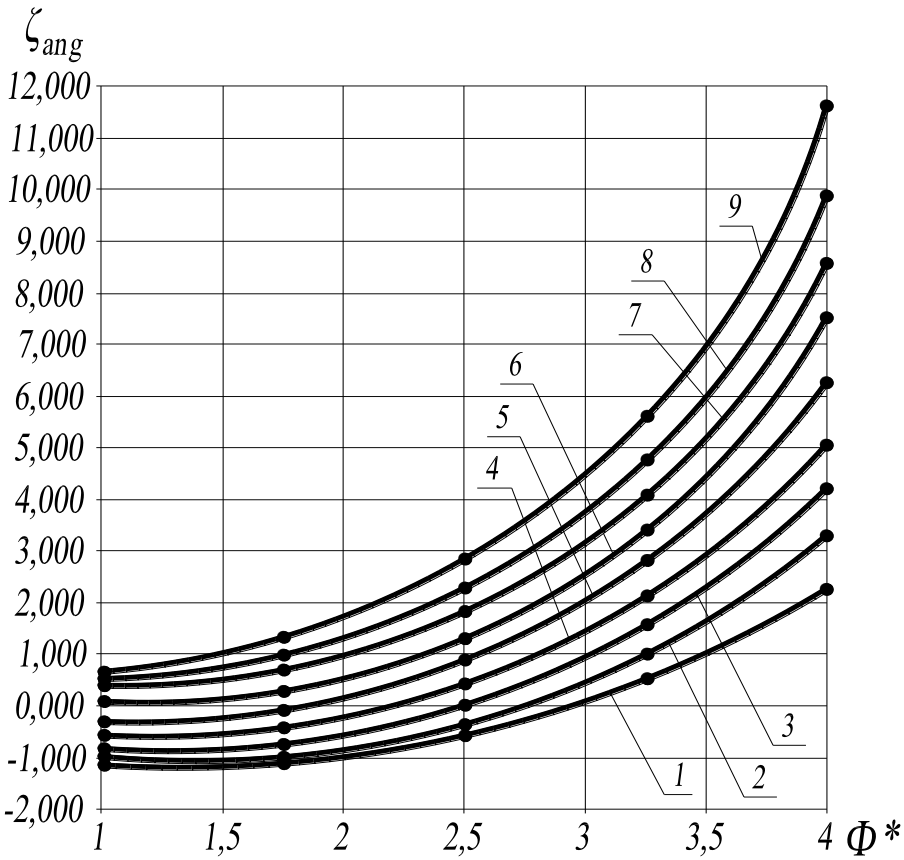

Figure-3. Dependence of local resistance coefficient for second angle way of tee swirling device with pipe second angle way, having a round cross section, connected at angle α = 30° on integrated swirling parameter and ratio of flow rates in inlet and in second angle way, for different diameters of second angle way $\xi_{ang}(\Phi^*; L_{ang}/L_{inl}; d_{ang}/d_{inl})$: 1 – d_{ang}/d_{inl} = 0,5, L_{ang}/L_{inl} = 0,4; 2 – d_{ang}/d_{inl} = 0,5, L_{ang}/L_{inl} = 0,55; 3 – d_{ang}/d_{inl} = 0,5, L_{ang}/L_{inl} = 0,7; 4 – d_{ang}/d_{inl} = 0,75, L_{ang}/L_{inl} = 0,4; 5 – d_{ang}/d_{inl} = 0,75, L_{ang}/L_{inl} = 0,55; 6 – d_{ang}/d_{inl} = 0,75, L_{ang}/L_{inl} = 0,7; 7 – d_{ang}/d_{inl} = 1, L_{ang}/L_{inl} = 0,4; 8 – d_{ang}/d_{inl} = 1, L_{ang}/L_{inl} = 0,55; 9 – d_{ang}/d_{inl} = 1, L_{ang}/L_{inl} = 0,7

Corresponding dependences characterizing pressure loss at parallel duct sections have the form

$$\Delta P_{out} = \frac{\rho}{2}\left(\frac{4L_{out}}{\pi d_{out}^{\,2}}\right)^2\left(\frac{\lambda_{out}}{d_{out}}\cdot l_{out} + \sum\xi_1\right) + \frac{\rho}{2}\left(\frac{4\left(L_{out}+L_{ang}\right)}{\pi d_{inl}^{\,2}}\right)^2\cdot\xi_{(out)} \tag{1}$$

$$\Delta P_{ang} = \frac{\rho}{2}\left(\frac{4L_{ang}}{\pi d_{ang}^{\,2}}\right)^2\left(\frac{\lambda_{ang}}{d_{ang}}\cdot l_{ang} + \sum\xi_2\right) + \frac{\rho}{2}\left(\frac{4\left(L_{out}+L_{ang}\right)}{\pi d_{inl}^{\,2}}\right)^2\cdot\xi_{(ang)} \tag{2}$$

Where

L_{out}, d_{out}, λ_{out}, $\sum\xi_1$ = flow rate, diameter, aerodynamic resistance coefficient and sum of local resistances coefficients at the section connected to the tee “main outlet ", respectively;

L_{ang}, d_{ang}, λ_{out}, $\sum\xi_2$ = the same values but for the section connected to the " second angle way", respectively;

d_{inl} = diameter of the inlet;

l_{ang}, l_{out} = the length at the section connected to the tee “second angle way" and to the tee “main outlet ", respectively;

ξ_{out}, ξ_{ang} = local resistance coefficients of the main outlet and tee second angle way, respectively.

RESULTS AND DISCUSSIONS

Computational experiments show that value of the aerodynamic resistance coefficient of the section λ calculated by Altshul formula almost does not change

when gas flow passing through the passage changes. For example, if the gas flow rate increases by 5 times, λ increases (depending on Re) by 1, 5...5% [11, 14, 16]. Taking into account this fact, for reverse aerodynamic analysis, value of aerodynamic resistance coefficient of the section λ is considered to be a constant value and is calculated for the corresponding section on the basis of a condition of equality of main outlet and second angle way flow ($L_{out} = L_{ang}$).

The first terms of equations (1) and (2) are expressed as a product of dynamic pressure and sum of local resistance coefficients and normalized local resistance coefficient along the length of the section

$$\xi_{sec} = \left(\frac{\lambda}{d_{sec}} l_{sec} + \sum \xi_{sec} \right) = const :$$

$$\Delta P_{out} = L_{out}{}^2 \frac{8\rho}{\pi d_{out}{}^4} \xi_1 + \left(L_{out} + L_{ang} \right)^2 \frac{8\rho}{\pi d_{inl}{}^4} \cdot \xi_{out} \quad (3)$$

$$\Delta P_{ang} = L_{ang}{}^2 \frac{8\rho}{\pi d_{ang}{}^4} \xi_2 + \left(L_{out} + L_{ang} \right)^2 \frac{8\rho}{\pi d_{inl}{}^4} \cdot \xi_{ang} \quad (4)$$

where

ξ_1, ξ_2 = sum of local resistances coefficients for sections connected to main outlet and second angle way, respectively.

It follows from (3) and (4) that, at reverse aerodynamic analysis in which the variables are only the values of the gas flow rate in the elements of the network L_{out} and L_{ang} and local resistance coefficient of the tee for main outlet and for second angle way ξ_{out}, ξ_{ang}. If

$$\frac{8\rho}{\pi d_{out}{}^4} = A \quad \frac{8\rho}{\pi d_{ang}{}^4} = B \quad \frac{8\rho}{\pi d_{inl}{}^4} = C \quad (4a)$$

Then $\Delta P_{out} = L_{out}{}^2 A\xi_1 + \left(L_{out} + L_{ang} \right)^2 C \cdot \xi_{out}$, (5)

$$\Delta P_{ang} = L_{ang}{}^2 B\xi_2 + \left(L_{out} + L_{ang} \right)^2 C \cdot \xi_{ang} \quad (6)$$

After substitution of polynomial dependences characterizing ξ_{out}, ξ_{ang} to (5) and (6), we have

$$\Delta P_{out} = L_{out}{}^2 A\xi_1 + \left(L_{out} + L_{ang} \right)^2 C \cdot \left(a_3 \left(\frac{L_{ang}}{L_{out} + L_{ang}} \right)^3 + a_2 \left(\frac{L_{ang}}{L_{out} + L_{ang}} \right)^2 + a_1 \left(\frac{L_{ang}}{L_{out} + L_{ang}} \right) + a_0 \right); \quad (7)$$

$$\Delta P_{ang} = L_{ang}{}^2 B\xi_2 + \left(L_{out} + L_{ang} \right)^2 C \cdot \left(b_3 \left(\frac{L_{ang}}{L_{out} + L_{ang}} \right)^3 + b_2 \left(\frac{L_{ang}}{L_{out} + L_{ang}} \right)^2 + b_1 \left(\frac{L_{ang}}{L_{out} + L_{ang}} \right) + b_0 \right) \quad (8)$$

where

a_i and b_i = corresponding coefficients of the regression equations characterizing the local resistance coefficients of the tee for main outlet and second angle way.

Since total flow rate (inlet flow rate) is set at the stage preceding the reverse calculation, the value of $L_{inl} = L_{out} + L_{ang}$ is constant. By replacing a sum of main outlet and second angle way flow rates with inlet flow rate, and after opening of the brackets, we have

$$\Delta P_{out} = L_{out}{}^2 A\xi_1 + L_{inl}{}^{-1} C a_3 L_{ang}{}^3 + C a_2 L_{ang}{}^2 + L_{inl} C a_1 L_{ang} + L_{inl}{}^2 C \cdot a_0 \quad (9)$$

$$\Delta P_{ang} = L_{ang}{}^2 B\xi_2 + L_{inl}{}^{-1} C b_3 L_{ang}{}^3 + C b_2 L_{ang}{}^2 + L_{inl} C b_1 L_{ang} + L_{inl}{}^2 C \cdot b_0 \quad (10)$$

where L_{inl} = gas flow rate in the inlet.

When equating expressions (9) and (10) characterizing aerodynamic resistance of parallel sections, expressing the main outlet flow rate by the second angle way flow rate and grouping the members of the equation by flow rate degrees L_{ang}, we get the following equation

$$L_{out}{}^{2} = L_{ang}{}^{3}\left(\frac{L_{inl}{}^{-1}Cb_3 - L_{inl}{}^{-1}Ca_3}{A\xi_1}\right) + L_{ang}{}^{2}\left(\frac{B\xi_2 + Cb_2 - Ca_2}{A\xi_1}\right) + L_{ang}\left(\frac{L_{inl}Cb_1 - L_{inl}Ca}{A\xi_1}\right) + \frac{L_{inl}{}^{2}Cb_0 - L_{inl}{}^{2}Ca_0}{A\xi_1}. \quad (11)$$

As the sum of flow rates in main outlet and in second angle way is constant (inlet flow rate) and it is set at the initial stage of the calculation, the main outlet flow rate can be expressed as the difference of the inlet and second angle way flow rates. At that

$$(L_{inl}-L_{ang})^2=k_3L_{ang}{}^3+k_2L_{ang}{}^2+k_1L_{ang}+k_0, \quad (12)$$

where

$$k_3 = \left(\frac{L_{inl}{}^{-1}Cb_3 - L_{inl}{}^{-1}Ca_3}{A\xi_1}\right); k_2 = \left(\frac{B\xi_2 + Cb_2 - Ca_2}{A\xi_1}\right);$$

$$k_1 = \left(\frac{L_{inl}Cb_1 - L_{inl}Ca}{A\xi_1}\right); k_0 = \frac{L_{inl}{}^{2}Cb_0 - L_{inl}{}^{2}Ca_0}{A\xi_1}.$$

Or

$$k_3L_{ang}{}^3+(k_2-1)L_{ang}{}^2+(k_1+2\,L_{inl})\,L_{ang}+(k_0-L_{inl}{}^2)=0 \quad (13)$$

For convenience of the equation solving, we divide the constant coefficients by k_3

$$L_{ang}{}^3+K_2L_{ang}{}^2+K_1\,L_{ang}+K_0=0, \quad (14)$$

where

$$K_2 = \left(\frac{d_{ang}{}^4\xi_2 + d_{inl}{}^4(b_2 - a_2)}{d_{out}{}^4\xi_1} - 1\right) \Bigg/ \left(\frac{d_{inl}{}^4 \cdot (b_3 - a_3)}{L_{inl}d_{out}{}^4\xi_1}\right) \quad (15)$$

$$K_1 = \left(\frac{L_{inl}d_{inl}{}^4(b_1 - a_1)}{d_{out}{}^4\xi_1} + 2L_{inl}\right) \Bigg/ \left(\frac{d_{inl}{}^4(b_3 - a_3)}{L_{inl}d_{out}{}^4\xi_1}\right) \quad (16)$$

$$K_0 = \left(\frac{L_{inl}{}^2d_{inl}{}^4(b_0 - a_0)}{d_{out}{}^4\xi_1} - L_{inl}{}^2\right) \Bigg/ \left(\frac{d_{inl}{}^4(b_3 - a_3)}{L_{inl}d_{out}{}^4\xi_1}\right) \quad (17)$$

Solution of the resulting equation (14) using Vietta-Cardano method and taking into account the value of its coefficients defined by formulas (15), (16), (17) shows that, in all cases, the equation has two complex conjugates roots and one real root, which is obviously a desired flow value L_{ang} in the second angle way, and this allows to find the roots using Cardano formula. At that, L_{out} value is defined as a difference between flow in the inlet and calculated flow in the second angle way.

The proposed calculation method is intended for aspiration systems in which tangential flow swirling systems described in [17 - 19] are applied.

CONCLUSIONS

a) Swirling of aspiration flow is a promising method for preventing of dust deposits formation in the air ducts of aspiration systems.

b) A method of aerodynamic analysis of branched aspiration networks is required for widespread application of swirling flow technology.

c) Use of polynomial approximation for evaluation of aerodynamic resistance coefficients of flow swirling tees reduces the problem of calculating branched aspiration networks to solution third degree equation by the Vietta-Cardano method.

d) Application of the proposed method allows calculating the exact value of the aspiration gas flow in parallel sections of the duct network, without application of iterative methods.

REFERENCES

[1] Azarov V.N., Borovkov D.P., Redhwan A.M. 2014. Application of swirling flows in aspiration systems. International Review of Mechanical Engineering. T. 8. 4: 750-753.

[2] Azarov V. N., Borovkov D. P. 2003. Application of swirling flows in aspiration systems used in construction industry. Joint scientific journal. 5: 102-107. [In Russian].

[3] Zheltobryukhov V. F., Borovkov D. P. 2001. Analysis of the causes of aspiration systems clogging in construction industry. In the collection: Problems of protection of industrial environment and nature. Proceedings of scientific and technical conference: 179-180. [In Russian].

[4] Borovkov D. P., Chichirov K. O. 2013. Aspiration systems with flow swirling in air ducts. Regional architecture and construction. 1: 115-121. [In Russian].

[5] Azarov V. N., Borovkov D. P. 2012. Application of flow swirling in aspiration systems used at the enterprises of construction industry. Building material. 5: 65-67. [In Russian].

[6] Azarov V. N., Borovkov D. P. 2012. On application of flow swirling in aspiration systems at the enterprises of construction industry. Bulletin of the Central regional Department of the Russian Academy of architecture and construction Sciences. Vol. 2: 12-17. [In Russian].

[7] Azarov V. N., Borovkov D. P., Filippova S. V. 2012. On transportation of dust particles by swirling flows in the air ducts of aspiration and dedusting ventilation systems. News of Southwest state University. 3-1 (42): 113-119. [In Russian].

[8] Azarov V. N., Borovkov D. P., Skorikov D. A. 2011. On application of flow swirling in air ducts of aspiration systems at the enterprises of the construction industry. Scientific papers SWorld. Vol.5. 3: 32-38. [In Russian].

[9] Borovkov D. P., Skorikov D. A. 2013. On application of flow swirling in aspiration systems used for production of construction materials. Bulletin of Volgograd state University of architecture and construction. Series: Construction and architecture. 30: 261-268. [In Russian].

[10] Borovkov D. P., Stepanov S. A., Kamburg V. G., Chichirov K. O. 2012. Reconstruction of drying equipment aspiration system in construction industry with use of flow swirling technology in the air ducts. Regional architecture and construction. 1: 123-128. [In Russian].

[11] Azarov V. N., Yudochkina A. O., Borovkov D. P. 2006. On inverse aerodynamic analysis of branched aspiration systems. Joint scientific journal. 14: 40-45. [In Russian].

[12] Azarov V.N., Lukanin D.V., Borovkov D.P., Redhwan A.M. 2014. Experimental study of secondary swirling flow influence on flows structure at separation chamber inlet of dust collector with counter swirling flows. International Review of Mechanical Engineering. T. 8. 5: 851-856.

[13] Bogoslovsky, V. N. 1992. Internal sanitary-technical devices. Ventilation and air conditioning. Moscow, Stroyizdat. 392 p. [in Russian].

[14] Azarov V. N., Borovkov D. P., Filippova S. V. 2012. On method of aerodynamic analysis of aspiration systems with a swirling flow in the air ducts. Internet-Vestnik VolgGASU. 1 (20): 18. [In Russian].

[15] Borovkov D. P., Skorikov D. A. 2013. Devices for creating a swirling flow in air ducts of aspiration systems. Internet-Vestnik VolgGASU. 1 (25): 3. [In Russian].

[16] Borovkov D. P., Chichirov K. O. 2012. Aerodynamic analysis of aspiration systems for creation of swirling flow in the air ducts. Regional architecture and construction. 3: 145-148. [In Russian].

[17] Azarov V. N., Borovkov D. P., Martyanov V. N., Azarov D. V. 2003. Device for dust removal from air duct. Patent for utility model RUS 33755 05.06.2003. [In Russian].

[18] Azarov V. N., Zheltobryukhov V. F., Borovkov D. P. 2003. Device for dust removal from air duct of aspiration systems being under excessive pressure. Patent for utility model RUS 35325 05.06.2003. [In Russian].

[19] Azarov V. N., Yudochkina A. O., Borovkov D. P. 2005. Flow swirling device for viscous materials. Patent for utility model RUS 50284 18.08.2005. [In Russian].