VOL. 13, NO. 22, NOVEMBER 2018 ISSN 1819-6608
ARPN Journal of Engineering and Applied Sciences

www.arpnjournals.com

RFID BASED AUTOMATED GATE SECURITY SYSTEM

Asha. N[1], A. S. Syed Navaz[2], J. Jayashree[1] and J. Vijayashree[1]
[1]Vellore Institute of Technology University, Vellore, Tamil Nadu, India
[2]Computer Applications, Muthayammal College of Arts and Science, Namakkal, Tamil Nadu, India
E-Mail: asha333.spring@gmail.com

ABSTRACT

Here has been rising enthusiasm for secure structure that must be attempted and genuine and smart respond for the organizations and companions. RFID (Radio Frequency Identification) is one of the consistent and speedy techniques for perceive the material dissent. In the long-back the institutionalized distinguishing pieces of proof are more perfect when stood out from RFID because of their cost yet now day by day's RFID are viably open and are more beneficial to use. Research has revealed some exceptional enhancements which make its programming significantly shorter and less requesting is an immediate consequence of supplanting microcontroller with Arduino. Arduino makes the circuit and programming a significant measure easier to get it. Paper relies upon security access and control system using RFID and Arduino with GSM module. A segment of the sensors are used like PIR, LPG for spillage area. Security get to system is astoundingly beneficial to use at home, office and business structures.

Keywords: RFID, GSM, GPS, MATLAB, Arduino, sensors.

INTRODUCTION

RFID, Radio Frequency Identification is a central and cheap innovation that empowers remote information transmission. This innovation has not been all the time utilized as a part of industry because of absence of institutionalization among the assembling organizations prior. RFID advances are productive and secure contrast with other system. With RFID, remote programmed recognizable proof takes a certain frame: the question, area, or individual is set apart with a remarkable identifier code contained with a RFID tag, which is somehow connected to or implanted in the objective. RFID isn't a solitary item however a complete framework, an ordinary RFID framework incorporate three essential components: RFID tag, peruser and back-end application framework, which requests the help of the PC organize.

A RFID peruser produces a low-level radio recurrence attractive field that empowers the tag. The label reacts to the peruser's inquiry and reports its quality through radio waves, transmitting its interesting ID information. This information is decoded by the peruser and go to the nearby application framework by means of middleware. The middleware goes about as an interface between the peruser and the RFID application framework. The framework at that point looks and matches the personality code with data put away in the host database or backend framework. Along these lines, openness or approval for additionally preparing can be conceded or cannot, contingent upon comes about got by the peruser and handled by the database.

BACKGROUND AND RELATED WORK

Today individuals are confronting more issues about security in all finished world, these days security is the most fundamental issue wherever on the planet; so security of everything increases increasingly elevated significance as of late. Here in this paper, endeavouring to repeat the thorough writing study identified with the different entryway bolts and gate security frameworks that are vital in the fields, for example, home, businesses and vehicle security where potential outcomes of invasion are expanding step by step. In past days, the exploration is gone on different entryway bolt security frameworks like customary security frameworks which give signs utilizing caution. Because of the headway in late strategies, some entryway bolt security frameworks depend on microcontroller, GSM, GPS, numerous sensors, programming like MATLAB, PROTEUS, and biometrics like face acknowledgment, Iris scanner, RFID, Smart Card and secret key and so on. Every framework has its own points of interest and weaknesses. In the greater part of frameworks, SMS method is utilized for correspondence so the framework will move toward becoming savvy, more dependable and it will require less investment to convey message. As security ends up real issue these days, the security checking frameworks today needs to make utilization of the most recent innovation. In a few papers, the creators have introduced entryway bolt security observing framework in light of inserted and Zigbee and once in a while the bolt is ensured via programmed secret key henceforth it couldn't without much of a stretch hack by programmers. Additionally the upgraded security frameworks are accessible in light of android stage, remote methods and inserted frameworks. A great deal of adjustment takes puts in different Gate bolt security from the most recent couple of years, in next coming years numerous progressions will happens.

RFID, Radio Frequency Identification is a modest innovation, can be executed for a few applications, for example, security, resource following, individuals following, stock discovery, get to control applications. The principle target of this paper is to plan and actualize an advanced security framework which can send in secured zone where just legitimate individual can be entered. We actualized a security framework containing entryway locking framework utilizing detached kind of RFID which can initiate, confirm, and approve the client and open the entryway progressively for secure access. The upside of

utilizing uninvolved RFID is that it capacities without a battery and latent labels are lighter and are more affordable than the dynamic labels. A brought together framework deals with the controlling, exchange and activity errand. The entryway securing framework works constant as the entryway open immediately when client put their tag in contact of peruser. The framework additionally makes a log containing registration and registration of every client alongside fundamental data of client.

There has been rising interest for secure framework that must be tried and true and fast reaction for the businesses and friends. RFID (Radio Frequency Identification) is one of the predictable and quick methods for distinguish the material protest. In the long-prior the standardized tags are more ideal when contrasted with RFID in light of their cost however now daily's RFID are effortlessly accessible and are more helpful to utilize. Research has rolled out some extraordinary improvements which makes its programming a considerable measure shorter and less demanding is a result of supplanting microcontroller with arduino. Arduino makes the circuit and programming a considerable measure less demanding to get it. Paper depends on security access and control framework utilizing RFID and Arduino with GSM module. A portion of the sensors are utilized like PIR, LPG for spillage identification. Security get to framework is exceptionally helpful to use at home, office and business structures.

We depict RFID innovation, compress our approach and our exploration, and above all, portray the examination openings in RFID for specialists in cryptography and data security. The regular topic in ease RFID frameworks is that calculation assets are extremely restricted, and all parts of the RFID framework are associated with each other. Understanding these associations and the subsequent outline trade-offs is a vital essential to adequately noting the difficulties of security and protection in ease RFID frameworks.

Since its creation in the 1940s, RFID has been a conspicuous focus for mishandle. Remote ID is an intense capacity, and RFID uncovers both a physical protest's inclination and area. Anybody can without much of a stretch increase unapproved access to RFID information since they needn't bother with an observable pathway to accumulate it. For instance, in the first RFID-based application—Identification Friend or Foe (IFF) frameworks—security ruptures brought about Allied planes being shot down. An easy-going spectator may imagine that the circumstance hasn't enhanced in light of the fact that in spite of worries that RFID frameworks are available to mishandle, it is presently accomplishing wide organization. RFID works as a medium for various errands including overseeing supply chains, following domesticated animals, counteracting forging, controlling building access, supporting computerized checkout, creating brilliant home apparatuses, finding kids, and notwithstanding thwarting grave looters. Intellectuals and activists caution that advanced RFID frameworks could be utilized for an extensive variety of exercises, from corporate security ruptures to behavioural profiling to general observation. In spite of the fact that this is valid, recall that issues have a tendency to move brave arrangements. RFID and data security have been truly entwined in a fortunate marriage of innovative advance. Assaults against unique IFF frameworks gave the scenery to the advancement of both traditional and present day security methods, going from flag sticking to challenge-reaction distinguishing proof. It's likewise likely that RFID will keep on inspiring advancement in security and protection look into, as it has improved the situation decades.

OVERVIEW

The product is utilized for administration, controlling, exchange, activity and keeping up record of the different clients. A computerized entryway locking framework is additionally actualized and administered by RFID peruser which verify and approve the client and open the entryway naturally. It additionally keeps the record of registration and registration of the client. It's essential to verify the client before going into a safe space and RFID give this arrangement. The framework empowers client to registration and registration under quick, secure and advantageous conditions. The framework incorporate entryway locking framework which open when the client put their tag in contact with peruser and the client data coordinated with the data as of now put away in database. The RFID controls the opening and shutting of the entryway. In this investigation we use RFID innovation to give answer for secure access of a space while keeping record of the client. We utilize the latent sort of RFID here. The inactive kinds of RFID are battery-less and they get energy to work from peruser. The real focal points of latent RFID are it’s financially savvy and little in estimate. Due to above favourable circumstances, it is generally utilized by stock following innovation. Current reception apparatus innovation makes it conceivable to littler in measure.

PROPOSED SYSTEM

The paper is primarily divided into two phase i.e. registering the master RFID and authenticate the RFID key. So, the first phase comprises of checking the ID of the RFID key in order register it as the master key. Then after that the latter phases comprises of identifying the scanned RFID key and verify if it is an invalid one or the master key. If it is valid then the gate would open granting access if it is invalid then we get warning alarm.

CHALLENGES PRESENT IN THE SYSTEM

Universally deploying RFID tags offers many potential security benefits, yet may expose new privacy threats. Otherwise intrusive or cumbersome security practices, such as airline passenger and baggage tracking, can be made practical by using

RFID systems. Authentication systems already take advantage of RFID technology, for example car key-less entry systems. Embedding RFID tags as seals of authenticity in documents, designer products, and currency

may discourage forgery. While RFID tags improve certain security properties in these applications, they may exacerbate privacy threats or pose new security risks.
RFID systems are different from other means of identification because RF communication is non-contact and non-line-of-sight, whereas other means of identification are either contact-based or require line-of sight. In other words, it is more difficult for the owner of the RF tag to physically impede communication with the tag. The promiscuity of RF tags is not unique; magnetic stripe cards, for example, are promiscuous, but we assume that the owner of the card takes the physical responsibility of preventing unauthorized users from physically accessing the card. Of course, the propagation characteristics of electromagnetic fields do limit the range from which passive RFID cards can be read. In fact, most tags operating at 13.56 MHz cannot be read from more than a meter away, and 915 MHz tags are difficult to read through most materials. Yet, as the information stored on the tag becomes more and more valuable, it is necessary to think through some of the security and privacy related issues in RFID.

OBJECTIVES

In this paper, the proposed security system contains gate locking system using passive type of RFID. The system stores all the necessary information about the user. A new user is first registered with the system and the corresponding information is burn in RFID tag. This RFID tag will be accessible through the system. When a registered user comes to the entry point, and put the tag into reader, the system checks whether it is registered user or imposter. If the user is registered one then the tab information is matched with the user information stored in system. The gate is open to entry of the user after successful authentication and close automatically after a specified time interval.

The principle target of this framework is to plan and execute an advanced security framework which can convey in secured zone where just credible individual can be entered. We actualized a security framework containing entryway locking framework utilizing uninvolved sort of RFID which can actuate, confirm, and approve the client and open the entryway progressively for secure access. The upside of utilizing detached RFID is that it capacities without a battery and inactive labels are lighter and are more affordable than the dynamic labels. A concentrated framework deals with the controlling, exchange and activity errand. The entryway securing framework works ongoing as the entryway open immediately when client put their tag in contact of peruser.

The undertaking additionally points in planning a totally robotized security get to framework for residential and modern applications. Security is the greater worry for an individual or a firm. Perceiving the need of security we built up a mechanized security get to framework with easy to understand get to.

Mechanization is the most much of the time spelled term in the field of gadgets. The long for computerization got numerous upsets the current advances. One among the innovations which had more prominent advancements is RF correspondences. The after effect of this is the RFID cards which transmit a one of a kind distinguishing proof number. This number transmitted by the RFID can be perused with the assistance of a RF peruser.

The confirmation to the house/business can be given in full or constrained relying upon the RFID cards. The choices like full access or constrained access are taken by an installed PC to which the RF peruser is interfaced. The entryways of the house/business shape the yield module and are interfaced to the same locally available PC through a servo engine.

This locally available PC comprises of number of info and yield ports. The installed PC is usually named as small scale controller. The information and yield port of the controller are interfaced with various information and yield modules relying upon the necessities. As it were miniaturized scale controller goes about as a correspondence medium for every one of the modules associated with the task. The gadget additionally comprises of graphical LCD which shows the data about entryways open and close.

SCOPE OF THE PAPER

It depends upon how original one could be to enhance the use of this paper. But for us this paper is practical for future uses such as Smart cart can be interfaced with wireless technologies to make it completely portable in the near future. Payment of bills using mobile can be implemented. A low cost RFID scanner can be manufactured and used which can scan multiple tags (products) simultaneously for faster processing and lesser resources. Automatic scanning & availability of products can be introduced. Pay preparation feature will be the latest trend in upcoming years due to the boost in the ecommerce industry.

E.g.:

a) In malls for generating bills without standing in queue.
b) Gaming zone
c) Environmental problems to control and make nature friendly.
d) Uses in ATM machines

SYSTEM ARCHITECTURE

The system architecture depicts the higher level design of the software product. The user must have the master key to enter the room. Once the user shows his/her key to the RFID reader, it scans the card and opens the gate and the will close after a few seconds. When there is an illicit entry i.e. when a person shows a wrong RFID card then there will be a warning sign and also an alarm will be triggered.

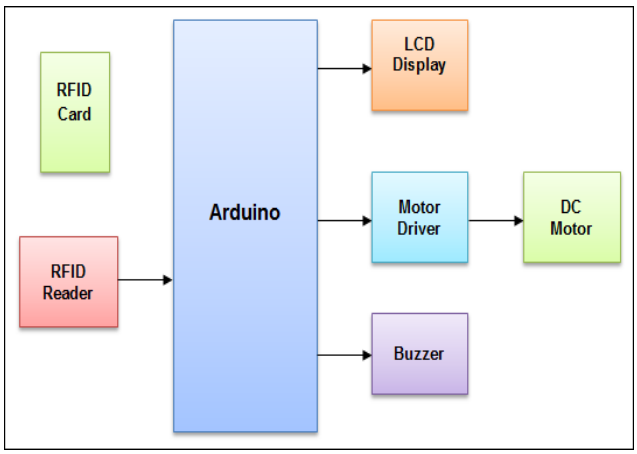

Figure-1. System architecture.

Working of the system

Basically the system is developed in such a way that it provides a quick response to the user and enhances the use of simple technologies in an efficient manner. Now coming to the working, the system consists of a unique security key access card which is saved in the system database and it will allow the user to go through the gate only if the unique key card is detected. If the detected key card is not authorized then, there will be an alarm triggered from the system software.

We also have two modules in the system software namely the registration phase and the recognition phase. The registration phase is where the unique key card of the user is registered in the system software. This is an important step because we need to add the unique key into the system with utmost precision because this is the key that will be used in the recognition phase. The recognition phase is where the detected key card is checked for its authentication. Thus these are the two most important phases that play a very significant role in the product system.

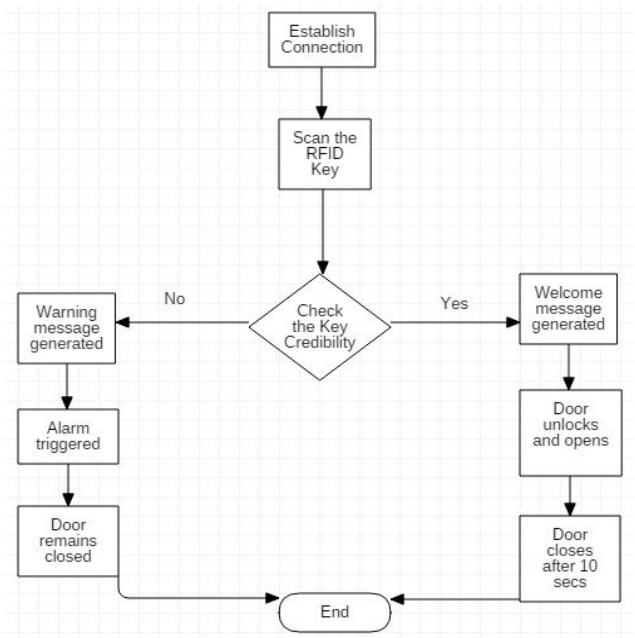

Figure-2. Working of the system in a flowchart.

RESULTS

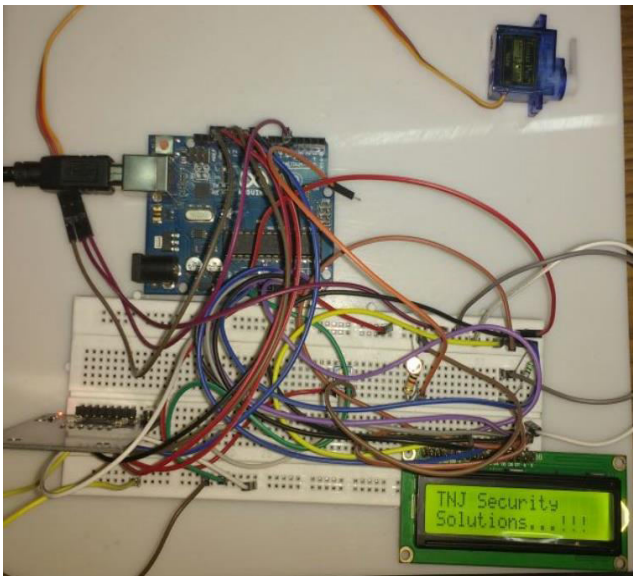

Figure-3. Paper preview.

In Figure-3 we can see all the components connected in their respective ports and the display also works remarkably. We can see all the components in this snapshot and also we can identify them with ease.

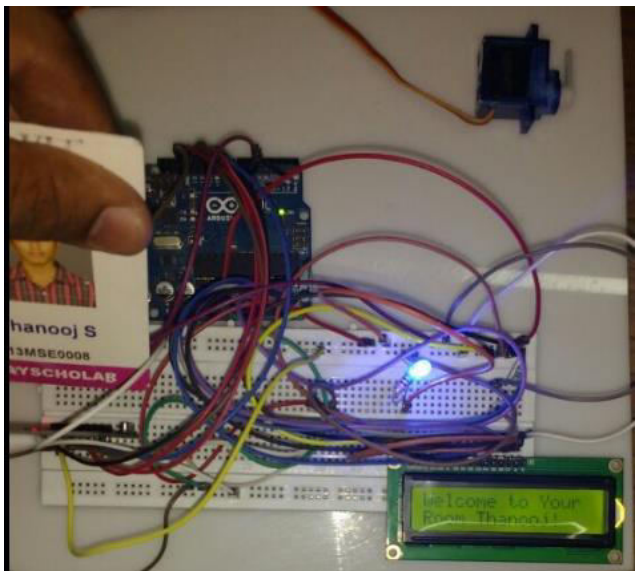

Figure-4. Welcome message displayed on detecting valid key.

In Figure-4 we can see that the RFID reader detects the valid RFID key card and the LCD display shows the welcome message. We can also see that a blue LED is turned ON when the card is detected; this is a sign of valid entry by the user. So whenever a valid user key card is detected the display will show a welcome message and a blue LED will be turned ON.

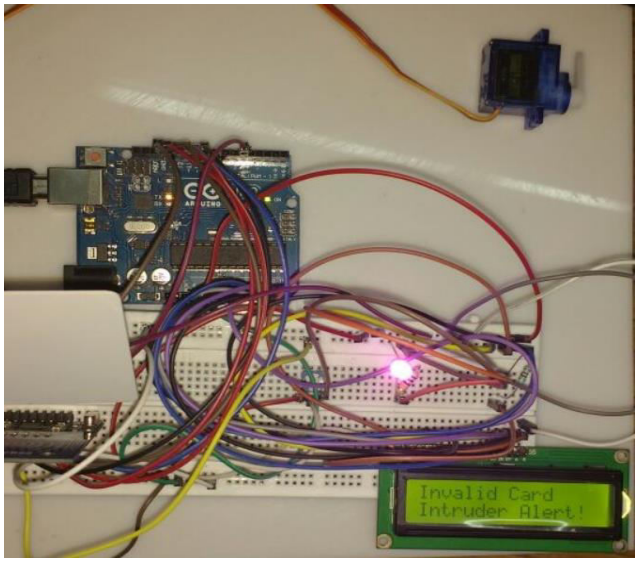

Figure-5. Warning message displayed on detecting invalid key.

In Figure.5 we can clearly see that the RFID reader detects a different RFID key card which seems to be invalid. And so, a warning message is displayed on the LCD display. We can also see that a pink LED is turned ON after the card detection; this is a sign of illicit entry. Thus when an invalid key card is detected, the LCD display will show a warning message and a pink LED will be turned ON.

Future works and enhancements

The RFID business is going to enter an energizing period in which expanded selection will give the way to innovation suppliers to put resources into new, energizing developments. Alongside the new improvements depicted above, headways in materials, natural polymers, Nano innovation, and different territories will change the way RFID is fused into items. It relies on how unique one could be to improve the utilization of this venture. Yet, for us this task is reasonable for future uses, for example, Smart truck can be interfaced with remote innovations to make it totally versatile sooner rather than later. Instalment of bills utilizing portable can be actualized. A minimal effort RFID scanner can be fabricated and utilized which can check different labels (items) all the while for speedier preparing and lesser assets. Programmed examining and accessibility of items can be presented. Pay planning highlight will be the most recent pattern in up and coming a very long time because of the lift in the internet business industry. Rather than a label connected to a piece of clothing, for instance, a RFID transponder could be printed straightforwardly into fabric or bundling utilizing biodegradable conductive inks. The eventual fate of RFID is here, so both end clients and RFID makers ought to be set up to use these new advances and prepare themselves for more boundless utilization of RFID.

CONCLUSIONS

RFID based security and access control system is more secure and fast responded as compared to the other system like biometric. The advantage of the RFID system is contact-less and works without-line-of-sight. By using Arduino it is easy to access and works very quickly while burning the code it is like Plug and Play device. Users can change the function accordingly by using Arduino. It is easier to use and accurate also. Hence this paper can be useful for implementation of access control application for tracking system as well as providing the security benefits. This paper can improve by raising the range of reader in which the tag read.

REFERENCES

[1] Nehete P. R., Chaudhari J. P., Pachpande S. R. & Rane K. P. Literature Survey on Door Lock Security Systems.

[2] Verma G. K. & Tripathi P. 2010. A digital security system with door locks system using RFID technology. International Journal of Computer Applications (IJCA) (0975–8887): 5(11).

[3] Kaushal G., Mishra R., Chaurasiya N. & Singh P. 2015. RFID based security and access control system using arduino with GSM module. International Journal of Electrical & Electronics Engineering. 2(2): 5-8.

[4] Sarma S. E., Weis S. A. & Engels D. W. 2002, August. RFID systems and security and privacy implications. In CHES. 2: 454-469.

[5] Rieback M. R., Crispo B. & Tanenbaum A. S. 2006. The evolution of RFID security. IEEE Pervasive Computing. 5(1): 62-69.

[6] Weis S. A., Sarma S. E., Rivest R. L. & Engels D. W. 2004. Security and privacy aspects of low-cost radio frequency identification systems. In Security in pervasive computing (pp. 201-212). Springer, Berlin, Heidelberg.

[7] Li M., Poovendran R., Falk R., Koepf A., Sampigethaya K., Robinson R. & Seuschek H.2008, September. Multi-domain RFID access control using asymmetric key based tag-reader mutual authentication. In ICAS2008-Proceedings of the 26th international Congress of the Aeronautical Sciences.

[8] Juels A. 2006. RFID security and privacy: A research survey. IEEE journal on selected areas in communications. 24(2): 381-394.

[9] Shepard S. 2005. RFID: radio frequency identification. McGraw Hill Professional.

[10] Goodrum P. M., McLaren M. A. & Durfee A. 2006. The application of active radio frequency identification technology for tool tracking on construction job sites. Automation in Construction. 15(3): 292-302.

[11] Ting R. & Keane M. 2014. RFID Door Lock.

[12] Wright M., Moon C., Mitchell E., Tran T., Beigel M., Remenih M. & Waldron S. 2006. U.S. Patent Application No. 11/101,863.

[13] Ha I. 2015. Security and Usability Improvement on a Digital Door Lock System based on Internet of Things. International Journal of Security and Its Applications. 9(8): 45-54.

[14] Nath S., Banerjee P., Biswas R. N., Mitra S. K. & Naskar M. K. 2016, December. Arduino based door unlocking system with real time control. In Contemporary Computing and Informatics (IC3I), 2016 2nd International Conference on (pp. 358-362). IEEE.

[15] A. S. Syed Navaz, P. Jayalakshmi, N. Asha. 2015. Optimization of Real-Time Video Over 3G Wireless Networks. September – 2015, International Journal of Applied Engineering Research. 10(18): 39724-39730.

[16] A. S. Syed Fiaz, N. Asha, D. Sumathi & A. S. Syed Navaz. 2016. Data Visualization: Enhancing Big Data More Adaptable and Valuable. February – 2016, International Journal of Applied Engineering Research.11(4): 2801-2804.

[17] A. S. Syed Navaz & Dr. G. M. Kadhar Nawaz. 2016. Flow Based Layer Selection Algorithm for Data Collection in Tree Structure Wireless Sensor Networks. March – 2016, International Journal of Applied Engineering Research.11(5): 3359-3363.

[18] A. S. Syed Navaz & Dr. G. M. Kadhar Nawaz. 2016. Layer Orient Time Domain Density Estimation Technique Based Channel Assignment in Tree Structure Wireless Sensor Networks for Fast Data Collection. June - 2016, International Journal of Engineering and Technology.8(3): 1506-1512.

[19] A. S. Syed Navaz, N. Asha & D. Sumath. 2017. Energy Efficient Consumption for Quality Based Sleep Scheduling in Wireless Sensor Networks. March - 2017, ARPN Journal of Engineering and Applied Sciences.12(5): 1494-1498.

[20] A. S. Syed Fiaz, K. S. Guruprakash & A. S. Syed Navaz. 2018. Prediction of Best Cloud Service Provider using the QoS Ranking Framework. January – 2018, International Journal of Engineering & Technology. 7(1.1): 486-488.

[21] **A**. S .Syed Navaz, Asha.N, Vanmathi Chandrasekaran & J. Jayashree. 2018 Resourceful Investigate Encryption Method Using Data Hunt in Mobile Cloud Service. August- 2018, ARPN Journal of Engineering and Applied Sciences.13(15): 4543-4549.

[22] M. Usha, J. Akilandeswari and A. S. Syed Fiaz. 2012. An efficient QoS framework for Cloud Brokerage Services. International Symposium on Cloud and Service Computing, pp: 76-79, 17-18, IEEE Xplore.